FALCON XA/XB
FAIRLANE ZF/ZG
PARTS CATALOGUE



Ford Motor Company
of Australia Limited
Parts and Accessories Office

CAT. 128C

CATALOGUE AIDS

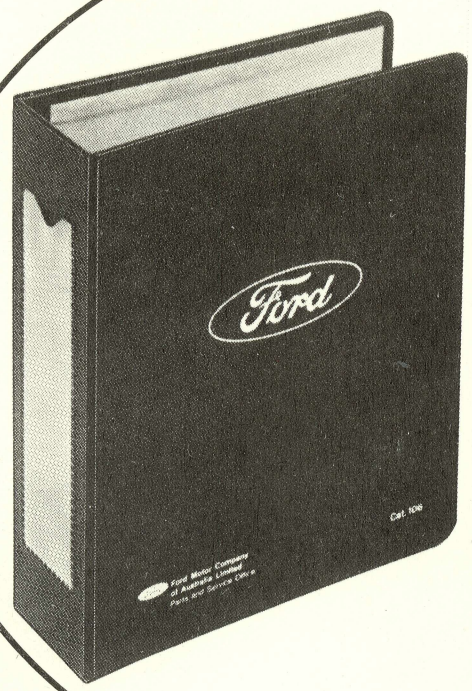

4 POST BINDER CAT. 106

This binder will give extra protection to your catalogue and provides a clear view window for easy identification. Cutout label for window is supplied on the rear leaf of all bound parts catalogues.

PRICE $4.00

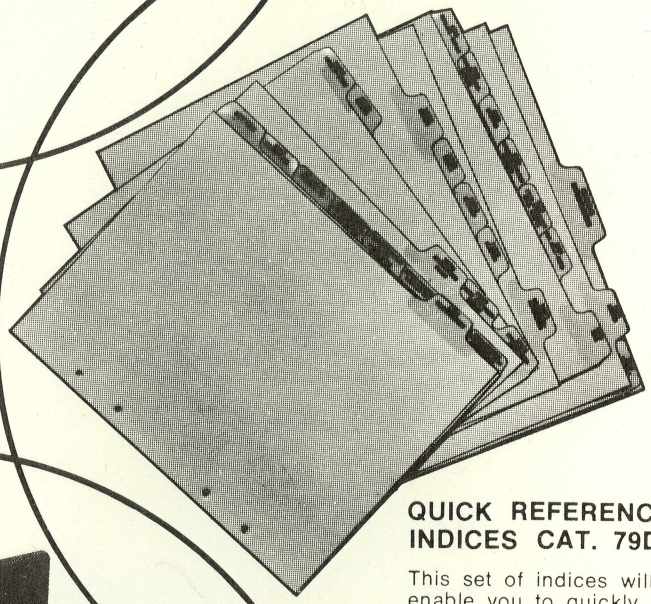

QUICK REFERENCE INDICES CAT. 79D

This set of indices will enable you to quickly turn to any section in your catalogue.

PRICE $1.35 PER SET

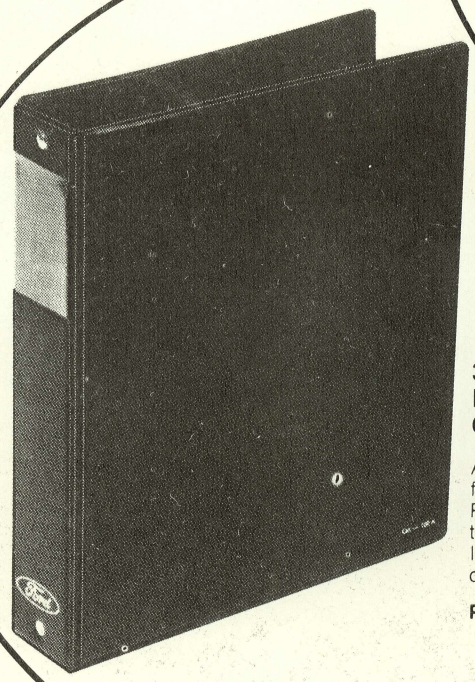

3 RING BINDER CAT. 100A

An essential item for filing reference of P. & S News letters, technical publications, letters and motorcraft catalogues.

PRICE $2.00

AVAILABLE FROM :

STAN H. EARLE
46 ISABELLA STREET
MOORABBIN
VICTORIA, 3189
PHONE : 95 6555

Prices subject to change without notice.

FALCON XA, XB
FAIRLANE ZF, ZG

illustrated
parts
catalogue

Ford Motor Company
of Australia Limited
Parts and Accessories Office

CAT. 128C

1/75

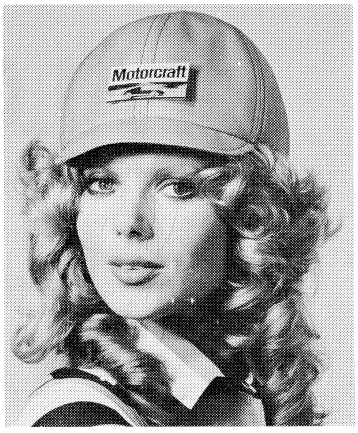

"Replace with the parts you can trust"

Whenever you repair or replace insist on the parts that were made by Ford for Ford. Only these parts have been engineered and manufactured to new Ford specifications.

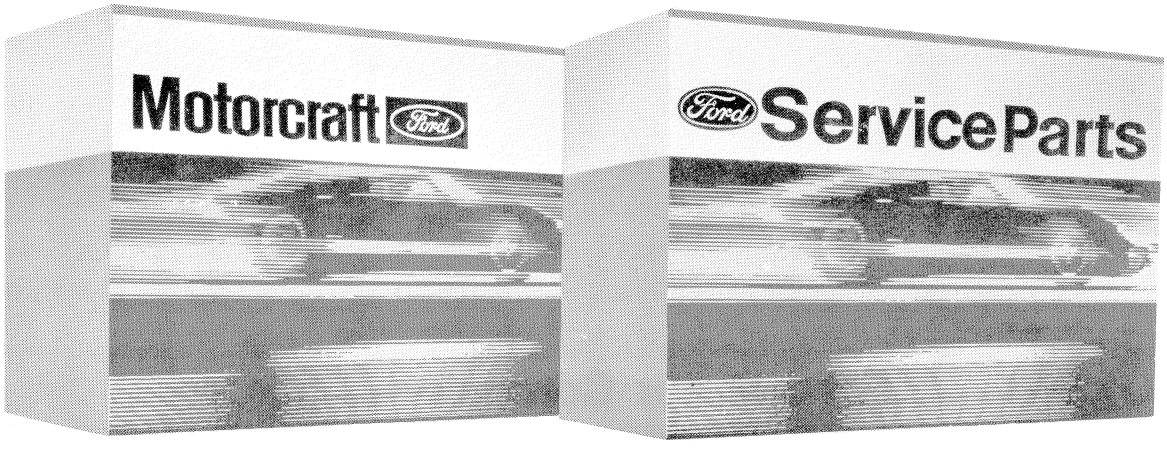

Motorcraft

Autolite's new name and the tops in competition proven auto parts like spark plugs, batteries and filters.

Motorcraft Ford

Genuine Ford Service Parts

The parts designed to keep your Ford young. Only they carry the nation wide Ford warranty. Get them wherever you see the Ford dealer sign.

Ford **Service Parts**

GENERAL
INFORMATION

HERE'S HOW TO FIND

FALCON - FAIRLANE

PARTS

1 Always identify the vehicle to be serviced by obtaining the model, engine, trans., paint and trim codes from the "Vehicle Identification Plate". (Refer sample page 3 & 4.)

2 Apply these codes to "IDENTIFICATION PLATE DETAIL". for body type and catalogue reference information.
Verification of model selection can be obtained by referring to the "MODEL IDENTIFICATION" pages.

3 If you know the BASIC NUMBER AND BODY TYPE, refer to the applicable section in which number is listed in numerical sequence.

4 If you know THE NAME AND LOCATION OF PART, BUT NOT THE PART NUMBER –

A. Refer to the Index to Parts List for Section No. in which part is located.
B. Next, turn to the illustrations at back of section in which part is located.
C. Identify part required and note basic number.
D. Turn to catalogue pages of section and locate correct part number for model or body type reference from "IDENTIFICATION PLATE DETAIL".

4A Components for some assemblies are catalogued under special "CATALOGUE CODES" which **DO NOT** refer to codes on the Vehicle Identification Plate, to identify a component of any of these assemblies –

A. Identify the assembly by using steps 1–4.
B. Note the code allotted to that particular assembly.
C. Identify the basic number of the component required.
D. Refer to the relevant catalogue pages and note the part number for that basic number listed against the "CAT. CODE" required.

5 "BODY PARTS", with Reference Index of sections, are located at rear of chassis sections.

GENERAL
INFORMATION

6 "SOFT TRIM" is included at rear of the body sections and printed on green pages. Instructions for the use of the Soft Trim section is included at the front of the section.

7 Where 'model', "Body Type", etc., details are too large to list on one line the body reference and part numbers are listed on the lower lines.

e.g. XA/ZF 54A/B/C/D/E/G
65B/D, 71 . . . . . 1 C60Z 2A602A

When in doubt the dot leader (. . . . .) will indicate the part number for any model/body type.

8 If you have now failed to locate the part or part number, order by description quoting all information notated on Identification Plate and, where practicable, forward sample and/or sketch.

ADDITIONAL CATALOGUE INFORMATION

(1) Parts Marked ★ on illustrations are not serviced. Use Std. Hardware or Fabricate where possible.

(2) Parts Marked * in catalogue pages are new part numbers not previously published.

(3) An Index of miscellaneous part numbers and their page locations appears at the back of this catalogue.

VEHICLE IDENTIFICATION PLATE

GENERAL INFORMATION

Location:
Left hand upper firewall panel

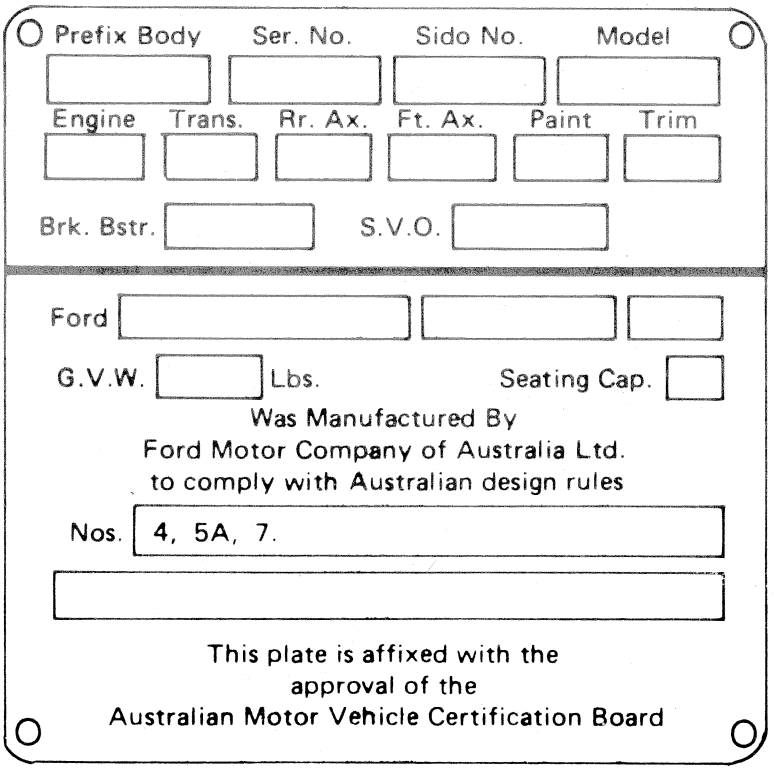

INTERPRETATION

Prefix:
Manufacturers use only.

Serial No.:
Manufacturers use only.

Sido No.:
Dealer Order No.

Model:
Digits 1 & 2 Product Line.
Digit 3 Model Year.
Digit 4 Body Style.
Digit 5 Series.

Trans.:
Transmission.

Rr. ax.:
Rear Axle.

Ft. ax.:
Front Axle.

S.V.O.:
Special vehicle order.

Brk. bstr.:
Brake booster.

G.V.W.:
Gross vehicle weight (for trucks only).

IDENTIFICATION PLATE Used To December 1972

VEHICLE IDENTIFICATION PLATE

GENERAL INFORMATION

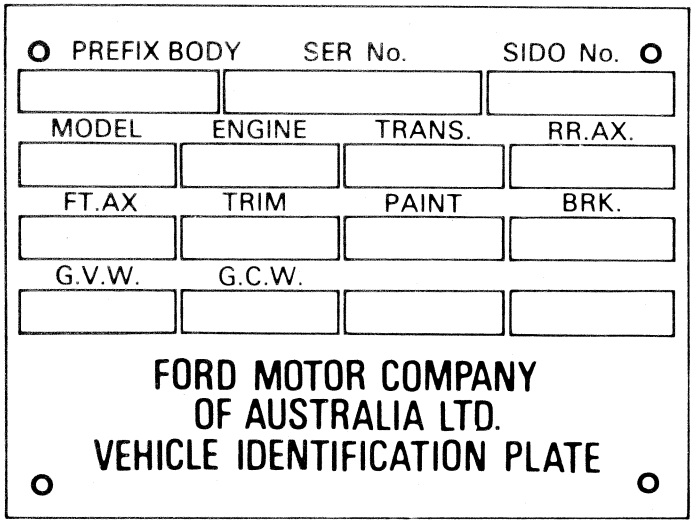

Prefix Body:	Manufacturers Use.
Serial No.:	Manufacturers Use.
Sido No.:	Dealer Order No.
Model:	Model Code.
Engine:	Engine Code.
Trans.:	Transmission Code.
Rr. ax.:	Rear Axle Code.
Ft. ax.:	Front Axle Code.
Trim:	Trim Code.
Paint:	Paint Code.
Brk.:	Brake Code.
G.V.W.:	Gross Vehicle Weight.
G.C.W.:	Gross Carrying Weight.

IDENTIFICATION PLATE **Used From** January 73
Location: R.H. Front Fender Apron

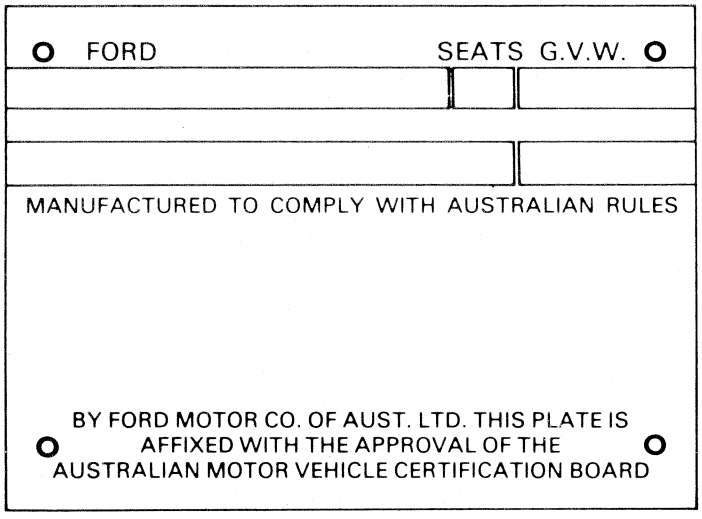

Ford:	Model Name.
Seats:	Seating Capacity.
G.V.W.	Gross Vehicle Weight.

COMPLIANCE PLATE **Used From** January 73
Location: R.H. Front Fender Apron

IDENTIFICATION PLATE DETAIL

GENERAL INFORMATION

FALCON/FAIRLANE – XA/ZF

MODEL CODE

CODE	TYPE		
18213	Falcon 500	– 2 Door Hardtop	(Body Type 65B)
18217	Fairmont	– 2 Door Hardtop	(Body Type 65D)
18218	Falcon GT	– 2 Door Hardtop	(Body Type 65H)
18231	Falcon STD	– 4 Door Sedan	(Body Type 54A)
18233	Falcon 500	– 4 Door Sedan	(Body Type 54B)
18235	Futura	– 4 Door Sedan	(Body Type 54C)
18237	Fairmont	– 4 Door Sedan	(Body Type 54D)
18238	Falcon GT	– 4 Door Sedan	(Body Type 54H)
18261	Falcon STD	– 4 Door Wagon	(Body Type 71A)
18263	Falcon 500	– 4 Door Wagon	(Body Type 71B)
18267	Fairmont	– 4 Door Wagon	(Body Type 71D)
24233	Fairlane Custom	– 4 Door Sedan	(Body Type 54E)
24237	Fairlane 500	– 4 Door Sedan	(Body Type 54G)
45271	Falcon STD*	– Utility	(Body Type 66A)
45273	Falcon 500	– Utility	(Body Type 66B)
45281	Falcon STD	– Van	(Body Type 78A)

ENGINE CODE

CODE	TYPE	
G	200 CID	6 Cylinder IV – High Compression
E	200 CID	6 Cylinder IV – Low Compression
L	250 CID	6 Cylinder IV – High Compression
J	250 CID	6 Cylinder IV – Low Compression
M	250 CID	6 Cylinder 2V – High Compression
Y	302 CID	8 Cylinder 2V – High Compression
K	351 CID	8 Cylinder 2V – High Compression
T	351 CID	8 Cylinder 4V – High Compression
H	351 CID	8 Cylinder 4V – High Compression – High Output

GENERAL INFORMATION

IDENTIFICATION PLATE DETAIL

FALCON/FAIRLANE – XA/ZF

TRANSMISSION CODE

CODE	TYPE		
J	Manual	– 3 Speed Column Change	– Partial Synchro
N	Manual	– 3 Speed Column Change	– All Synchro
L	Manual	– 4 Speed Floor Change	– All Synchro
R	Automatic	– 3 Speed Cruisomatic	– Column Change
B	Automatic	– 3 Speed Cruisomatic	– Floor Change

TRIM CODE

CODE	TYPE
A	Blue – Vinyl
B	Black – Vinyl
P	Parchment – Vinyl
S	Saddle – Vinyl
U	Dark Grey – Vinyl
W	White – Vinyl
Y	Burgundy – Vinyl
A2	Blue – Vinyl and Cloth
B2	Black – Vinyl and Cloth
P2	Parchment – Vinyl and Cloth
S2	Saddle – Vinyl and Cloth
W2	White – Vinyl and Cloth
Y2	Burgundy – Vinyl and Cloth

PAINT CODE

REFER SECTION 190B

IDENTIFICATION PLATE DETAIL

FALCON/FAIRLANE – XB/ZG

MODEL CODE

CODE	TYPE		
18313	Falcon 500	– 2 Door Hardtop	(Body Type 65B)
18317	Fairmont	– 2 Door Hardtop	(Body Type 65D)
18318	Falcon GT	– 2 Door Hardtop	(Body Type 65H)
18331	Falcon STD	– 4 Door Sedan	(Body Type 54A)
18333	Falcon 500	– 4 Door Sedan	(Body Type 54B)
18335	Futura	– 4 Door Sedan	(Body Type 54C)
18337	Fairmont	– 4 Door Sedan	(Body Type 54D)
18338	Falcon GT	– 4 Door Sedan	(Body Type 54H)
18341	Falcon STD Taxi	– 4 Door Sedan	(Body Type 54A)
18343	Falcon 500 Taxi	– 4 Door Sedan	(Body Type 54B)
18345	Futura Taxi	– 4 Door Sedan	(Body Type 54C)
18361	Falcon STD	– 4 Door Wagon	(Body Type 71A)
18363	Falcon 500	– 4 Door Wagon	(Body Type 71B)
18367	Fairmont	– 4 Door Wagon	(Body Type 71D)
24333	Fairlane Custom	– 4 Door Sedan	(Body Type 54E)
24337	Fairlane 500	– 4 Door Sedan	(Body Type 54G)
24343	Fairlane Custom Taxi	– 4 Door Sedan	(Body Type 54E)
24347	Fairlane 500 Taxi	– 4 Door Sedan	(Body Type 54G)
45371	Falcon STD	– Utility	(Body Type 66A)
45373	Falcon 500	– Utility	(Body Type 66B)
45381	Falcon STD	– Van	(Body Type 78A)
45383	Falcon 500	– Van	(Body Type 78B)

ENGINE CODE

CODE	TYPE	
G	200 CID	6 Cylinder 1V – High Compression
E	200 CID	6 Cylinder 1V – Low Compression
L	250 CID	6 Cylinder 1V – High Compression
J	250 CID	6 Cylinder 1V – Low Compression
Y	302 CID	8 Cylinder 2V – High Compression
K	351 CID	8 Cylinder 2V – High Compression
T	351 CID	8 Cylinder 4V – High Compression

IDENTIFICATION PLATE DETAIL

GENERAL INFORMATION

FALCON/FAIRLANE – XB/ZG

TRANSMISSION CODE

CODE	TYPE
N	Manual – 3 Speed Column Change – All Synchro
L	Manual – 4 Speed Floor Change – All Synchro
R	Automatic – 3 Speed Cruisomatic– Column Change
B	Automatic – 3 Speed Cruisomatic – Floor Change

TRIM CODE

CODE	TYPE
B	Black – Vinyl
S	Saddle – Vinyl
K	Brown – Vinyl
C	Chamois – Vinyl
W	White – Vinyl
P	Parchment – Vinyl
B2	Black – Vinyl and Cloth
S2	Saddle – Vinyl and Cloth
K2	Brown – Vinyl and Cloth
C2	Chamois – Vinyl and Cloth
W2	White – Vinyl and Cloth
P2	Parchment – Vinyl and Cloth

PAINT CODE

REFER SECTION 190B

MODEL IDENTIFICATION

GENERAL INFORMATION



XA Falcon STD.
Body Type 54A
Model No. 18231

Intro. March 1972

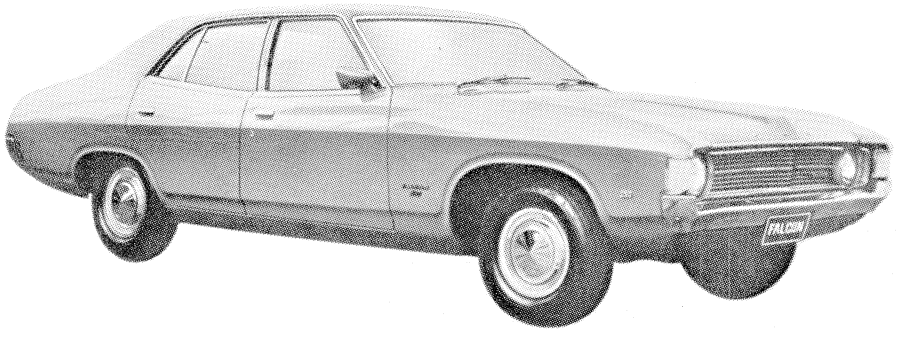

XA Falcon 500.
Body Type 54B
Model No. 18233

Intro. March 1972

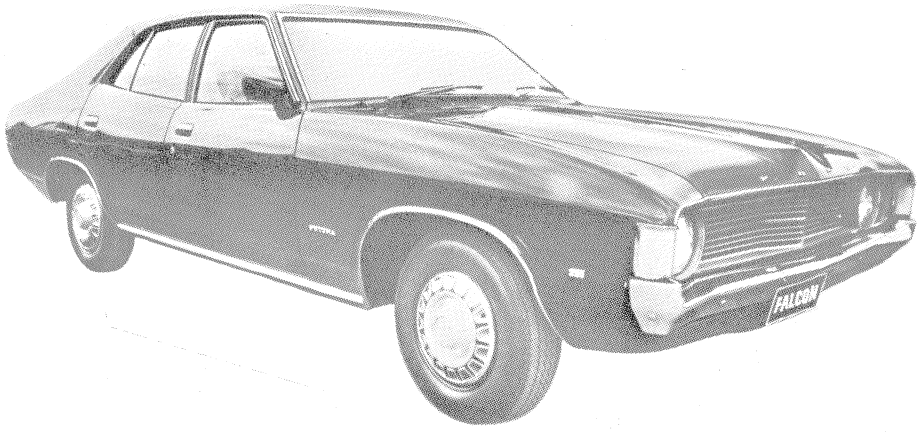

XA Futura
Body Type 54C
Model No. 18235

Intro. March 1972

MODEL IDENTIFICATION

GENERAL INFORMATION



XA Fairmont

Body Type 54D

Model No. 18237

Intro. March 1972

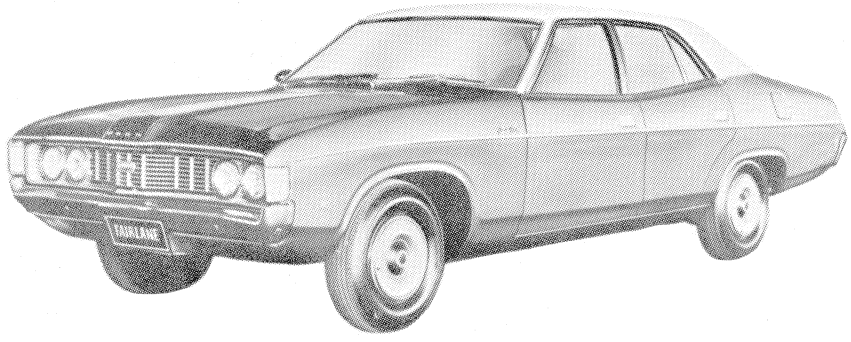

ZF Fairlane Custom

Body Type 54E

Model No. 24233

Intro. April 1972



ZF Fairlane 500

Body Type 54G

Model No. 24237

Intro. April 1972

MODEL IDENTIFICATION

GENERAL INFORMATION



XA Falcon GT

Body Type 54H

Model No. 18238

Intro. March 1972



XA Falcon 500

Body Type 65B

Model No. 18213

Intro. August 1972



XA Fairmont

Body Type 65D

Model No. 18217

Intro. August 1972

MODEL IDENTIFICATION

GENERAL INFORMATION



XA Falcon GT

Body Type 65H

Model No. 18218

Intro. August 1972



XA Falcon STD

Body Type 66A

Model No. 45271

Intro. July 1972

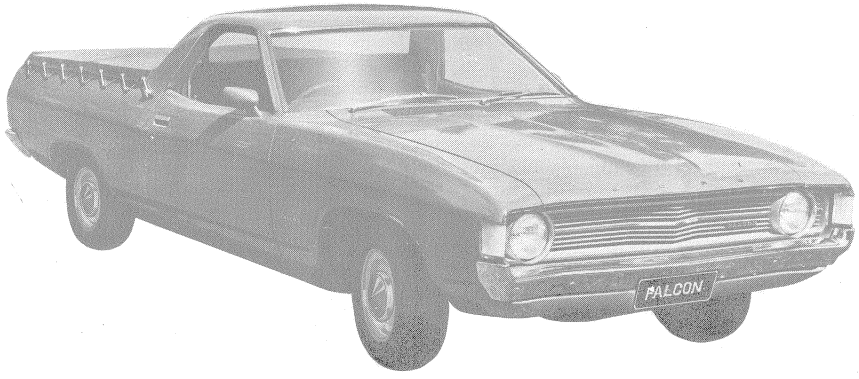

XA Falcon 500

Body Type 66B

Model No. 45273

Intro. July 1972

MODEL IDENTIFICATION

GENERAL INFORMATION

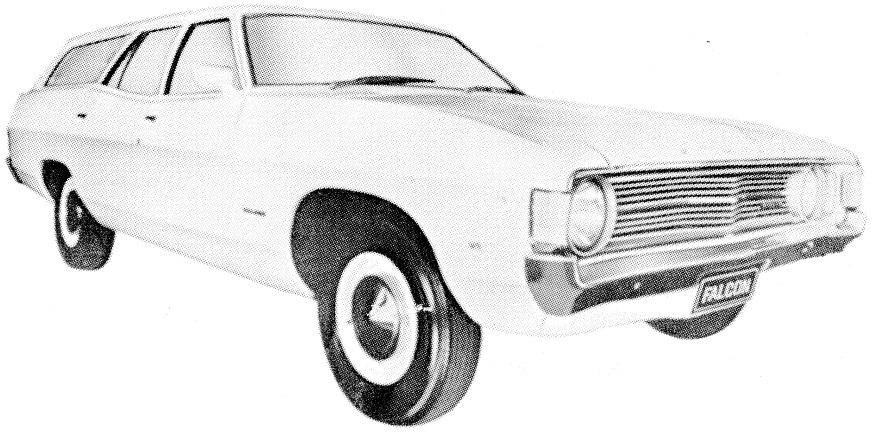

XA Falcon STD.

Body Type 71A

Model No. 18261

Intro. March 1972

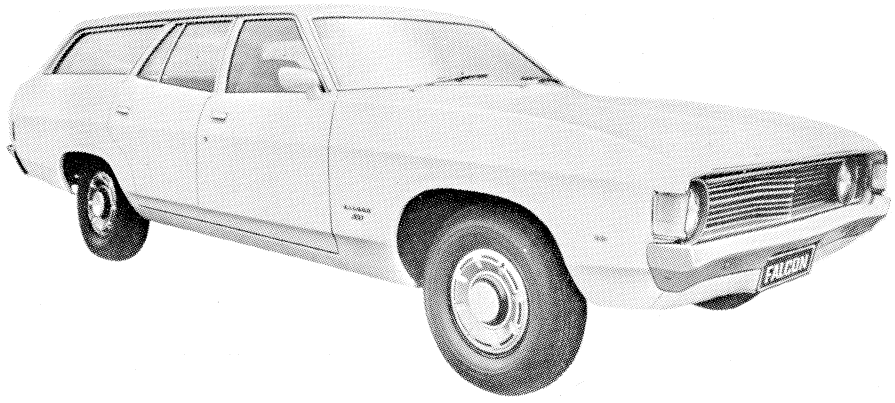

XA Falcon 500

Body Type 71B

Model No. 18263

Intro. March 1972

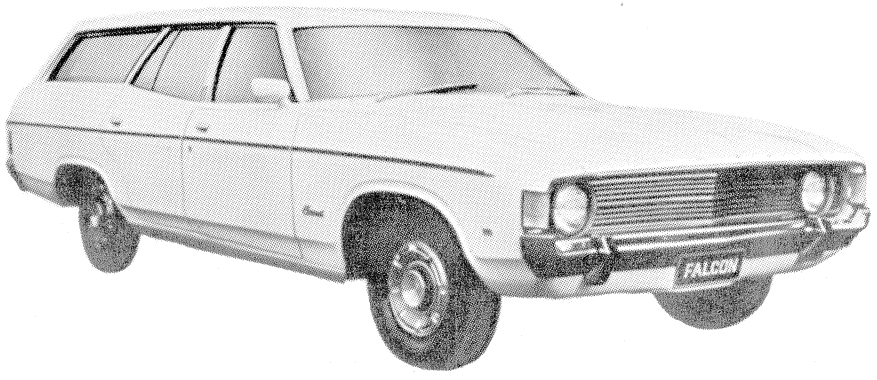

XA Fairmont

Body Type 71D

Model No. 18267

Intro. March 1972

MODEL IDENTIFICATION

GENERAL INFORMATION



XA Falcon STD.

Body Type 78A

Model No. 45281

Intro. August 1972

MODEL IDENTIFICATION

GENERAL INFORMATION

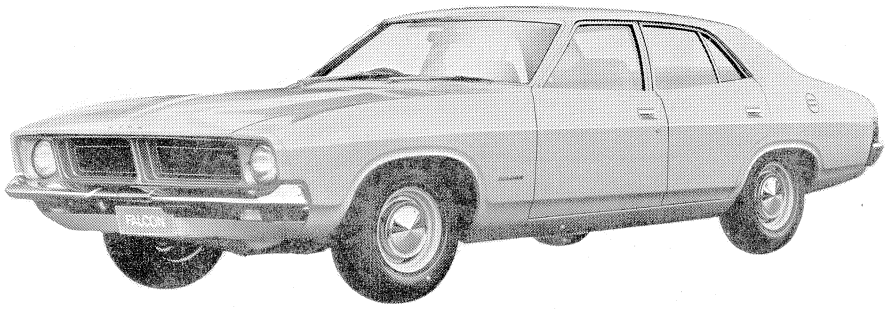

XB Falcon STD.

Body Type 54A

Model No. 18331
18341 (Taxi)

Intro. November 1973



XB Falcon 500

Body Type 54B

Model No. 18333
18343 (Taxi)

Intro. November 1973



XB Futura

Body Type 54C

Model No. 18335
18345 (Taxi)

Intro. November 1973

MODEL IDENTIFICATION

GENERAL INFORMATION



XB Fairmont

Body Type 54D

Model No. 18337

Intro. November 1973

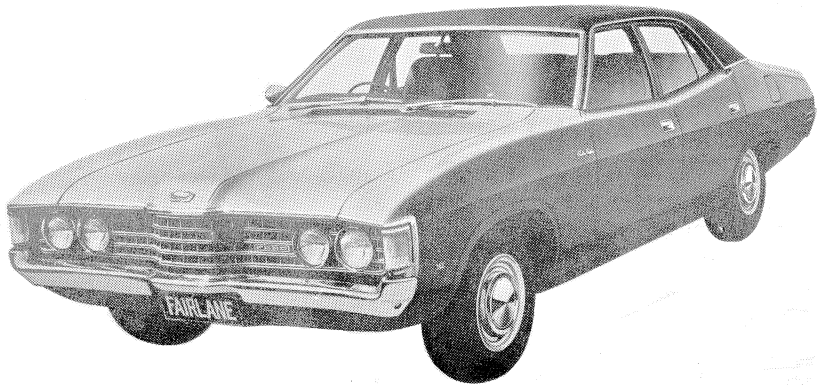

ZG Fairlane Custom

Body Type 54E

Model No. 24333
24343 (Taxi)

Intro. November 1973



ZG Fairlane 500

Body Type 54G

Model No. 24337
24347 (Taxi)

Intro. November 1973

MODEL IDENTIFICATION

GENERAL INFORMATION



XB Falcon GT

Body Type 54H

Model No. 18338

Intro. November 1973



XB Falcon 500

Body Type 65B

Model No. 18313

Intro. November 1973



XB Fairmont

Body Type 65D

Model No. 18317

Intro. November 1973

MODEL IDENTIFICATION

GENERAL INFORMATION



XB Falcon GT

Body Type 65H

Model No. 18318

Intro. November 1973



XB Falcon STD.

Body Type 66A

Model No. 45371

Intro. November 1973



XB Falcon 500

Body Type 66B

Model No. 45373

Intro. November 1973

MODEL IDENTIFICATION

GENERAL INFORMATION

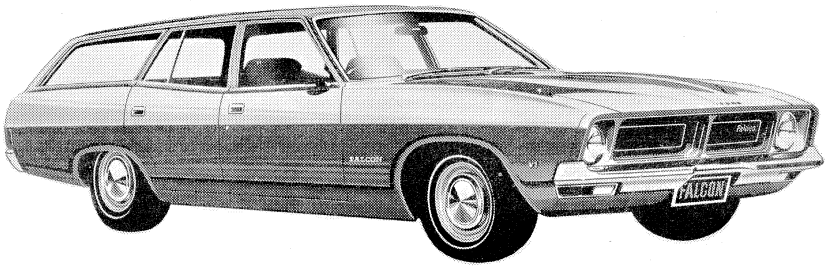

XB Falcon STD

Body Type 71A

Model No. 18361

Intro. November 1973



XB Falcon 500

Body Type 71B

Model No. 18363

Intro. November 1973

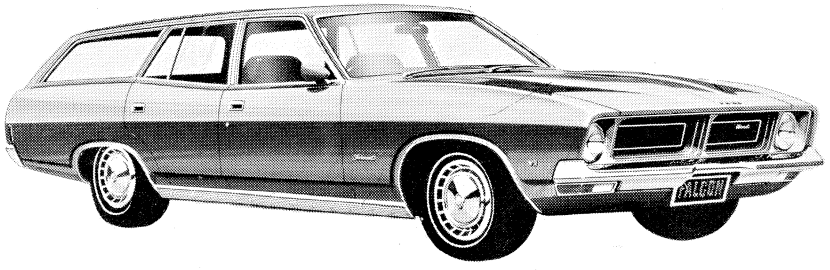

XB Fairmont

Body Type 71D

Model No. 18367

Intro. November 1973

MODEL IDENTIFICATION

GENERAL INFORMATION



XB Falcon STD

Body Type 78A

Model No. 45381

Intro. November 1973



XB Falcon 500

Body Type 78B

Model No. 45383

Intro. November 1973

ENGINE SPECIFICATIONS

GENERAL INFORMATION

3.3 LITRE (200 CID) HIGH COMPRESSION

No. of Cylinders	6	
Bore	93.47 MM	(3.68 INS)
Stroke	79.51 MM	(3.13 INS)
Power	97 KW	(130 BHP)
Taxable Power (R. A. C.)	32.50	
Compression Ratio	8.8:1	

3.3 LITRE (200 CID) LOW COMPRESSION

No. of Cylinders	6	
Bore	93.47 MM	(3.68 INS)
Stroke	79.51 MM	(3.13 INS)
Power	85 KW	(114 BHP)
Taxable Power (R. A. C.)	32.50	
Compression Ratio	8.0:1	

4.1 LITRE (250 CID) 1V HIGH COMPRESSION

No. of Cylinders	6	
Bore	93.47 MM	(3.68 INS)
Stroke	99.31 MM	(3.91 INS)
Power	116 KW	(155 BHP)
Taxable Power (R. A. C.)	32.50	
Compression Ratio	9.1:1	

4.1 LITRE (250 CID) 1V LOW COMPRESSION

No. of Cylinders	6	
Bore	93.47 MM	(3.68INS)
Stroke	99.31 MM	(3.91 INS)
Power	103KW	(138 BHP)
Taxable Power (R. A. C.)	32.50	
Compression Ratio	8.2:1	

4.1 LITRE (250 CID) 2V HIGH COMPRESSION

No. of Cylinders	6	
Bore	93.47 MM	(3.68 INS)
Stroke	99.31 MM	(3.91 INS)
Power	127 KW	(170 BHP)
Taxable Power (R. A. C.)	32.50	
Compression Ratio	9.1:1	

ENGINE SPECIFICATIONS

GENERAL INFORMATION

5.0 LITRE (302 CID) 2V HIGH COMPRESSION

No. of Cylinders	8	
Bore	101.6 MM	(4.00 INS)
Stroke	76.2 MM	(3.0 INS)
Power	172 KW	(230 BHP)
Taxable Power (R. A. C.)	51.20	
Compression Ratio	9.1:1	

5.8 LITRE (351 CID) 2V HIGH COMPRESSION

No. of Cylinders	8	
Bore	101.6 MM	(4.00 INS)
Stroke	88.9 MM	(3.50 INS)
Power	186 KW	(250 BHP)
Taxable Power (R. A. C.)	51.20	
Compression Ratio	9.1:1	

5.8 LITRE (351 CID) 4V HIGH COMPRESSION (IMPORTED)

No. of Cylinders	8	
Bore	101.6 MM	(4.00 INS)
Stroke	88.9 MM	(3.50 INS)
Power	224 KW	(300 BHP)
Taxable Power (R. A. C.)	51.20	
Compression Ratio	11.0:1	

5.8 LITRE (351 CID) 4V HIGH COMPRESSION (LOCAL)

No. of Cylinders	8	
Bore	101.6 MM	(4.00 INS)
Stroke	88.9 MM	(3.50INS)
Power	224 KW	(300 BHP)
Taxable Power (R. A. C.)	51.20	
Compression Ratio	9.1:1	

GENERAL
INFORMATION

FORD MOTOR COMPANY BASIC PART NUMBERING SYSTEM

CHASSIS, ENGINE AND ELECTRICAL BASIC NUMBER SERIES

GROUP NO'S.	BASIC PART NO. SERIES	BASIC SERIES EXPANSION	PARTS WHICH QUALIFY BY FUNCTIONAL AREA
1	1000-1250	1A000-1A250	Wheels, Hubs, and Drums
1	1251-1349	1A251-1A349	Open Numbers
1	1350-1499	1A350-1A499	Spare Wheel Carrier
1	1500-1724	1A500-1A724	Tyres and Tubes
1	1725-1999	1A725-1A999	Open Numbers
2	2000-2594	2A000-2A594	Brakes
2	2595-2874	2A595-2A874	Brakes—Parking
2	2875-2999	2A875-2A999	Air Compressor
3	3000-3499	3A000-3A499	Front Axles and Front Suspensions
3	3500-3776	3A500-3A776	Steering Gear and Steering Wheel
3	3777-3999	3A777-3A999	Open Numbers
4	4000-4999	4A000-4A999	Rear Axle and Driveshaft and Coupling Shaft
5	5000-5149	5A000-5A149	Frame and Brackets
5	5150-5199	5A150-5A199	*
5	5200-5299	5A200-5A299	Muffler, Exhaust Pipes, and Brackets
5	5300-5350	5A300-5A350	Front Springs
5	5351-5416	5A351-5A416	Sub-Frame (For Cab Mounting)
5	5417-5454	5A417-5A454	Open Numbers
5	5455-5481	5A455-5A481	Front Springs—Clips, Studs, and Bushings
5	5482-5499	5A482-5A499	Stabilizer and Attaching Parts
5	5500-5515	5A500-5A515	Front Spring Covers
5	5516-5999	5A516-5A999	Rear Springs and Attaching Parts
6	6000-6899	6A000-6A899	Engine and Mounts
6	6900-6944	6A900-6A944	*
6	6945-6999	6A945-6A999	Engine Installation and Dress-up Kits
7	7000-7499	7A000-7A499	Transmission and Shifting Controls
7	7500-7649	7A500-7A649	Clutch and Controls
7	7650-7799	7A650-7A799	Transmission Overdrive
7	7800-7999	7A800-7A999	Torque Converter
8	8000-8499	8A000-8A499	Radiator and Grille Parts
8	8500-8599	8A500-8A599	Water Pumps
8	8600-8669	8A600-8A669	Fan and Brackets
8	8670-8999	8A670-8A999	Open Numbers
9	9000-9269	9A000-9A269	Fuel Tank
9	9270-9339	9A270-9A339	Fuel and Oil Gauges and Fuel Tubes
9	9340-9423	9A340-9A423	Fuel Pumps
9	9424-9499	9A424-9A499	Manifold, Clamps, Thermostats, etc.
9	9500-9599	9A500-9A599	Carburettors
9	9600-9699	9A600-9A699	Carburettor Air Cleaners
9	9700-9899	9A700-9A899	Thermostatic Choke, Acc. Spark & Throttle Control Rods
9	9900-9999	9A900-9A999	*
10	10000-10299	10A000-10A299	Generators
10	10300-10399	10A300-10A399	Alternator and Rectifier
10	10400-10499	10A400-10A499	Open Numbers
10	10500-10649	10A500-10A649	Generator Regulator
10	10650-10837	10A650-10A837	Battery and Supports—Voltmeter and Charge Indicator
10	10838-10999	10A838-10A999	Instrument Cluster and Controls
11	11000-11529	11A000-11A529	Starting Motor and Starter Switch
11	11530-11568	11A530-11A568	Open Numbers
11	11569-11619	11A569-11A619	Ignition Switch
11	11620-11644	11A620-11A644	Open Numbers
11	11645-11688	11A645-11A688	Lighting Switch
11	11689-11999	11A689-11A999	Open Numbers
12	12000-12399	12A000-12A399	Ignition Coil, Distributor, Condenser and Diaphragm
12	12400-12427	12A400-12A427	Spark Plugs
12	12428-12449	12A428-12A449	Open Numbers
12	12450-12499	12A450-12A499	Engine Governor
12	12500-12599	12A500-12A599	Open Numbers
12	12600-12999	12A600-12A999	Open Numbers
13	13000-13199	13A000-13A199	Head Lamps
13	13200-13299	13A200-13A299	Parking Lamps
13	13300-13399	13A300-13A399	Turn Signal
13	13400-13699	13A400-13A699	License, Tail, and Stop Lamps
13	13700-13799	13A700-13A799	Courtesy, Dome, and Instrument Lamps and Switches
13	13800-13949	13A800-13A949	Horn
13	13950-13999	13A950-13A999	Open Numbers
14	14000-14689	14A000-14A689	Wiring and Circuit Breakers, Terminals and Connectors, Window Regulator, Fuse Panel
14	14690-14724	14A690-14A724	Seat Regulator (Electrical)
14	14725-14999	14A725-14A999	Junction Boxes and Electric Conduit
15	15000-15039	15A000-15A039	Clocks
15	15040-15074	15A040-15A074	Cigar Lighter
15	15075-15114	15A075-15A114	Lamp Assy.—Cluster
15	15115-15199	15A115-15A199	*
15	15200-15299	15A200-15A299	Road Lamps
15	15300-15399	15A300-15A399	Spot Lamps
15	15400-15489	15A400-15A489	Lamp Assy.—Marker
15	15490-15549	15A490-15A549	Lamp Assy.—Back-up
15	15550-15579	15A550-15A579	Lamp Assy.—Utility
15	15580-15599	15A580-15A599	Lamp Assy.—Police Flasher
15	15600-15649	15A600-15A649	*
15	15650-15655	15A650-15A655	Map Lamp
15	15656-15699	15A656-15A699	Top Control
15	15700-15724	15A700-15A724	Engine Compartment Lamp
15	15725-15759	15A725-15A759	Commercial Pump Motors Note: Not used Passenger Car, Truck & Industrial Engines
15	15760-15799	15A760-15A799	Open Numbers
15	15800-15849	15A800-15A849	Lamp Assy.—Transmission Control Selector Indicator
15	15850-15874	15A850-15A874	Parking Brake Signal
15	15875-15899	15A875-15A899	Open Numbers
15	15900-15999	15A900-15A999	*
16	16000-16249	16A000-16A249	Front Fender and Aprons
16	16250-16299	16A250-16A299	Fender Shields
16	16300-16449	16A300-16A449	Rear Fenders
16	16450-16549	16A450-16A549	Running Boards and Brackets
16	16550-16579	16A550-16A579	Splash Shields
16	16580-16599	16A580-16A599	Open Numbers
16	16600-16999	16A600-16A999	Hood, Brackets, and Controls
17	17000-17149	17A000-17A149	Tools
17	17150-17249	17A150-17A249	Open Numbers
17	17250-17384	17A250-17A384	Speedometer and Tachometer
17	17385-17399	17A385-17A399	Open Numbers
17	17400-17424	17A400-17A424	Rear Window Wiper
17	17425-17599	17A425-17A599	Windshield Wipers
17	17600-17674	17A600-17A674	Windshield Washers
17	17675-17748	17A675-17A748	Rear View Mirrors
17	17749-17999	17A749-17A999	Front and Rear Bumpers and Stone Deflectors
18	18000-18199	18A000-18A199	Shock Absorbers
18	18200-18241	18A200-18A241	*
18	18242-18699	18A242-18A699	Heaters
18	18700-18799	18A700-18A799	Air Brakes
18	18800-19499	18A800-19A499	Radio
19	19500-19549	19A500-19A549	Miscellaneous Accessories
19	19550-19999	19A550-19A999	Air Conditioners

*This series has become inactive and parts qualifying will be identified with part numbers from a more appropriate series.

BODY BASIC NUMBERS AND CORRESPONDING FUNCTIONS

GROUP NO'S.	BASIC PART NO. SERIES	BASIC SERIES EXPANSION	PARTS WHICH QUALIFY BY FUNCTIONAL AREA
000	*7000000-7000099	70000A00-70000A99	Body Assembly & Trim Sets
001	00100-00399	001A00-003A99	Front End Assembly
014	01400-01499	014A00-014A99	Ventilating Ducts & Valves
015	01500-01599	015A00-015A99	Brake Pedal Support
016-017	01600-01799	016A00-017A99	Dash Assembly
018-019	01800-01999	018A00-019A99	Ventilating Ducts & Valves
020-024	02000-02499	020A00-024A99	Cowl Assembly
025-026	02500-02699	025A00-026A99	Front Body Pillar Assy.
027-028	02700-02899	027A00-028A99	Open
029	02900-02999	029A00-029A99	Body Front Tie Bow Braces, Etc.
030-039	03000-03999	030A00-039A99	Windshield Assembly
040-042	04000-04249	040A00-042A49	Visor Assembly
042-043	04250-04399	042A50-043A99	Front Belt Rail Inst. Panel Assy.
044-045	04400-04599	044A00-045A99	Panel Assy.—Instr. Panel Details
046-047	04600-04799	046A00-047A99	Cigar Lighter Assy. & Instrument Cluster
048	04800-04899	048A00-048A99	Ash Receptacle Assy.
049-059	04900-05999	049A00-059A99	Open
060-061	06000-06199	060A00-061A99	Glove Compt. Assy.
062-099	06200-09999	062A00-099A99	Open
100	*7010000-7010099	70100A00-70100A99	Floor Assembly
101-105	10100-10599	101A00-105A99	Floor Side Member Assy.
106-109	10600-10999	106A00-109A99	Floor Cross Sill Assy.
110	11000-11099	110A00-110A99	Under Body Assy.
111-113	11100-11399	111A00-113A99	Floor Pan Assembly
114	11400-11499	114A00-114A99	Floor Pan Silencers & Pads
115-117	11500-11799	115A00-117A99	Floor Board Assy.
118-119	11800-11999	118A00-119A99	Open
120	12000-12099	120A00-120A99	Floor Board Riser
121-122	12100-12299	121A00-122A99	Floor Trans. Cover Dust Sealer
123-125	12300-12599	123A00-125A99	Open
126	12600-12699	126A00-126A99	Floor Skid Strip
127-129	12700-12999	127A00-129A99	Open
130-131	13000-13199	130A00-131A99	Floor Mat & Carpet
132	13200-13299	132A00-132A99	Floor Scuff Plate
133-134	13300-13499	133A00-134A99	Open
135	13500-13599	135A00-135A99	Floor Tool Box
136-137	13600-13799	136A00-137A99	Open
140	14000-14099	140A00-140A99	Member Assy.—Body Side Front
141	14100-14199	141A00-141A99	Member Assy.—Body Side Rear
142	14200-14299	142A00-142A99	Sill Assy.—Floor Pan Cross Front
143-199	14300-19999	143A00-199A99	Open
200	*7020000-7020099	70200A00-70200A99	Body Side Assembly
201	20100-20199	201A00-201A99	Front Door
202-203	20200-20399	202A00-203A99	Front Door Panel
204	20400-20499	204A00-204A99	Front Door Pillar
205-206	20500-20699	205A00-206A99	Front Door Header
207	20700-20799	207A00-207A99	Front Door Bottom
208-210	20800-21099	208A00-210A99	Front Door Garnish Mldg. & Mldgs.
211-212	21100-21299	211A00-212A99	Front Door Reinf.
213	21300-21399	213A00-213A99	Open
214-217	21400-21799	214A00-217A99	Front Door Glass
218-221	21800-22199	218A00-221A99	Front Door Lock
222-223	22200-22399	222A00-223A99	Front Door—Glass Frame
224	22400-22499	224A00-224A99	Front Door Handles
225	22500-22599	225A00-225A99	Open
226	22600-22699	226A00-226A99	Front Door Handles—Inside
227	22700-22799	227A00-227A99	Open
228	22800-22899	228A00-228A99	Front Door Hinge
229	22900-22999	229A00-229A99	Front Door Ventilating Window
230	23000-23099	230A00-230A99	Front Door Dovetail
231-233	23100-23399	231A00-233A99	Front Door Regulator
234	23400-23499	234A00-234A99	Front Door Window Regulator
235	23500-23599	235A00-235A99	Front Door Check
236	23600-23699	236A00-236A99	Open
237-239	23700-23999	237A00-239A99	Front Door Trim
240-241	24000-24199	240A00-241A99	Front Door Arm Rest
242	24200-24299	242A00-242A99	Hydraulic Window Operating
243-245	24300-24599	243A00-245A99	Centre Pillar Assy.
246	24600-24699	246A00-246A99	Rear Door Assy.
247-249	24700-24999	247A00-249A99	Rear Door Panels
250	25000-25099	250A00-250A99	Rear Door Frame & Pillar Assy.
251-252	25100-25299	251A00-252A99	Rear Door Header
253	25300-25399	253A00-253A99	Rear Door Bottom
254-256	25400-25699	254A00-256A99	Rear Door Garnish Moulding
257-258	25700-25899	257A00-258A99	Rear Door Glass
259	25900-25999	259A00-259A99	Open
260	26000-26199	260A00-261A99	Rear Door Reinf.
262-263	26200-26399	262A00-263A99	Rear Door Glass Frame
264-265	26400-26599	264A00-265A99	Rear Door Lock
266	26600-26699	266A00-266A99	Rear Door Handles
267	26700-26799	267A00-267A99	Open
268	26800-26899	268A00-268A99	Rear Door Hinge
269	26900-26999	269A00-269A99	Open
270-271	27000-27199	270A00-271A99	Rear Door Regulator
272	27200-27299	272A00-272A99	Rear Door Check
273	27300-27399	273A00-273A99	Rear Door Regulator Vacuum Lift
274-276	27400-27699	274A00-276A99	Rear Door Trim
277	27700-27799	277A00-277A99	Quarter Assy.
278-280	27800-28099	278A00-280A99	Quarter Panel Assy.
281-283	28100-28399	281A00-283A99	Quarter Lock Pillar
284	28400-28499	284A00-284A99	Open
285	28500-28599	285A00-285A99	Quarter Header
286	28600-28699	286A00-286A99	Quarter Frame
287	28700-28799	287A00-287A99	Quarter Belt Rail
288	28800-28999	288A00-289A99	Open
290-291	29000-29199	290A00-291A99	Quarter Window Garnish Moulding & Moulding
292-295	29200-29599	292A00-295A99	Quarter Reinf. Braces & Brkts.
296	29600-29699	296A00-296A99	Quarter Window Assy.
297	29700-29799	297A00-297A99	Quarter Window Glass
298-299	29800-29999	298A00-299A99	Quarter Glass Channel
300-301	7030000-7030199	70300A00-70301A99	Quarter Glass Run Quarter Window Reg.
302	30200-30299	302A00-302A99	Quarter Vent. Window
303-304	30300-30499	303A00-304A99	Quarter Window Regulator
305-306	30500-30699	305A00-306A99	Quarter Glass Frame
307	30700-30799	307A00-307A99	Quarter Arm Rest Ash Receptacle
308-309	30800-30999	308A00-309A99	Open
310-314	31000-31499	310A00-314A99	Quarter Trim Assy. & Assist Loop
315	31500-31599	315A00-315A99	Open
316-318	31600-31899	316A00-318A99	Qtr. Arm Rest Assy. & Rear Seat Centre Arm Rest
319	31900-31999	319A00-319A99	Quarter Panel Spare Wheel Compt.
320-321	32000-32199	320A00-321A99	Open
322-323	32200-32399	322A00-323A99	Side Slats—Trim Sticks—Anti-Squeaks
324	32400-32499	324A00-324A99	Quarter Folding Compt.—Package
325-399	32500-39999	325A00-399A99	Open
400	7040000-7040099	70400A00-70400A99	Back Door Assembly
401	40100-40199	401A00-401A99	Luggage Compt. Door Assy.
402	40200-40299	402A00-402A99	Tail Gate Assy.
403	40300-40399	403A00-403A99	Back Panel Assy.
404	40400-40499	404A00-404A99	Lift Gate
405	40500-40599	405A00-405A99	Open
406	40600-40699	406A00-406A99	Luggage Compt. Door Panel
407	40700-40799	407A00-407A99	Tail Gate Panel Assy.
408	40800-40899	408A00-408A99	Back Door Frame Assy.
409	40900-40999	409A00-409A99	Tail Gate Frame Assy.
410	41000-41099	410A00-410A99	Back Door Pillar Fillers
411	41100-41199	411A00-411A99	Open
412	41200-41299	412A00-412A99	Deck Pillar Group
413	41300-41399	413A00-413A99	Luggage Compt. & Lift Gate Door Header
414-415	41400-41599	414A00-415A99	Open
416	41600-41699	416A00-416A99	Tail Gate Framing
417-418	41700-41899	417A00-418A99	Back Belt Rail
419	41900-41999	419A00-419A99	Back Door Glass & Framing
420-421	42000-42199	420A00-421A99	Back Window Glass
422	42200-42299	422A00-422A99	Back Window Frame Assy.
423-424	42300-42499	423A00-424A99	Back Window Garnish Moulding
425	42500-42599	425A00-425A99	Back Door Finish Strip—Mouldings
426	42600-42699	426A00-426A99	Tail Gate Cross Finish Strip
427-428	42700-42899	427A00-428A99	Luggage Compt. Hinge Assy.—Lamp Assy.
429	42900-42999	429A00-429A99	Back Door Hinge & Reinf. Assy.

This series has become inactive and parts qualifying will be identified with part numbers from a more appropriate series.

GENERAL
INFORMATION

BODY BASIC NUMBERS AND CORRESPONDING FUNCTIONS (Continued)

GROUP NO'S.	BASIC PART NO. SERIES	BASIC SERIES EXPANSION	PARTS WHICH QUALIFY BY FUNCTIONAL AREA
430	43000-43099	430A00-430A99	Tail Gate Hinge Assy.
431	43100-43149	431A00-431A49	Back Door Lock Assy.
431	43150-43199	431A50-431A99	Tail Gate Lock Assy.
432-433	43200-43399	432A00-433A99	Luggage Compt. Lock Assy.
434	43400-43499	434A00-434A99	Back Door Handle Assembly
435-436	43500-43699	435A00-436A99	Luggage Compt. Locking Handle
437	43700-43799	437A00-437A99	Back Door Weatherstrip
438	43800-43899	438A00-438A99	Luggage Compt., Bumper & Weatherstrip
439	43900-43999	439A00-439A99	Tail Gate Bumper & Dowel
440	44000-44099	440A00-440A99	Back Window Regulator Assy.
441	44100-44199	441A00-441A99	Back Door Check Assy.
442	44200-44299	442A00-442A99	Luggage Compt. Lid Support–Clamp
443	44300-44399	443A00-443A99	Open
444-445	44400-44599	444A00-445A99	Tail Gate Support
446	44600-44699	446A00-446A99	Back Reinf. Brackets
447	44700-44799	447A00-447A99	Back Door Reinf.
448-449	44800-44999	448A00-449A99	Luggage Compt. Opening Reinf.
450	45000-45099	450A00-450A99	Tail Gate Reinforcement
451	45100-45199	451A00-451A99	Luggage Compt. Drain Trough
452	45200-45299	452A00-452A99	Back Trim
453	45300-45399	453A00-453A99	Back Curtain
454-455	45400-45599	454A00-455A99	Luggage Compt. Trim
456	45600-45699	456A00-456A99	Luggage Tool Compt.
457	45700-45799	457A00-457A99	Luggage Compt. Partition Board
458	45800-45899	458A00-458A99	Luggage Compt. Shelf Board
459	45900-45999	459A00-459A99	Luggage Compt. Lamp Assy.
460	46000-46099	460A00-460A99	Luggage Compartment Package Compt.
461	46100-46199	461A00-461A99	Tool Compt.
462	46200-46299	462A00-462A99	Deck Step
463	46300-46399	463A00-463A99	Back Door Trim
464	46400-46499	464A00-464A99	Luggage Compt. Trim
465-469	46500-46999	465A00-469A99	Package Tray
470-472	47000-47299	470A00-472A99	Spare Wheel Compartment
473-479	47300-47999	473A00-479A99	Open
480	48000-48099	480A00-480A90	Rear Rack Assy.
481-499	48100-49999	481A00-499A99	Open
500	7050000-7050099	70500A00-70500A99	Roof Assy.
501	50100-50199	501A00-501A99	Top Assy.
502	50200-50299	502A00-502A99	Roof Panel Assy.
503-505	50300-50599	503A00-505A99	Top Slat Iron
506-507	50600-50799	506A00-507A99	Top Operating Mechanism
508-512	50800-51299	508A00-512A99	Roof Reinf. Retainers
513	51300-51399	513A00-513A99	Roof Rail Assembly
514-515	51400-51599	514A00-515A99	Top Bow Assy. & Dome Lamp–Brkts. & Att. Parts
516	51600-51699	516A00-516A99	Roof Rib & Slats
517	51700-51799	517A00-517A99	Roof Drip & Finish Moulding
518	51800-51899	518A00-518A99	Roof Partition
519	51900-51999	519A00-519A99	Roof Trim Panel Headlining
521-522	52100-52299	521A00-522A99	Roof Headlining Support
523	52300-52399	523A00-523A99	Roof Binding
524	52400-52499	524A00-524A99	Roof Cardboard
525	52500-52599	525A00-525A99	Top Back Curtain
526	52600-52699	526A00-526A99	Open
527-529	52700-52999	527A00-529A99	Top Deck & Slide Quarter
530	53000-53099	530A00-530A99	Top Stack–Toggle
531	53100-53199	531A00-531A99	Top Landau–Folding Pillar
532	53200-53299	532A00-532A99	Top Back Curtain
533	53300-53399	533A00-533A99	Hydraulic Group
534	53400-53499	534A00-534A99	Top Curtain Container
535	53500-53599	535A00-535A99	Top Side Front Curtain
536	53600-53699	536A00-536A99	Top Side Rear Curtain
537	53700-53799	537A00-537A99	Top Covers, Pads and Retainers
538	53800-53899	538A00-538A99	Quarter Curtain
539-541	53900-54199	539A00-541A99	Folding Top
542	54200-54299	542A00-542A99	Top Back Stay
543	54300-54399	543A00-543A99	Roof Pads & Wadding–Silencers
544	54400-54499	544A00-544A99	Top Dust Hood & Container
545	54500-54599	545A00-545A99	Open
546	54600-54699	546A00-546A99	Top Folding Compt.
547	54700-54799	547A00-547A99	Roof Weatherstrip
548	54800-54899	548A00-548A99	Top Hold Down Snap
549	54960-54999	549A00-549A99	Roof Ventilator
550-551	55000-55199	550A00-551A99	Top Luggage Carrier
552-559	55200-55999	552A00-559A99	Open
600	7060000-7060024	70600A00-70600A24	Front Seat Assy. Compt. Less Trim
600	60025-60049	600A25-600A49	Rear Seat Assy.–Opera Seat Assy.
600	60050-60074	600A50-600A74	Front Seat Assy.
600	60075-60099	600A75-600A99	Rear Seat Cushion Assy.
601	60100-60124	601A00-601A24	Driver's Seat Adjustment
601	60125-60199	601A25-601A99	Rear Seat Back Assy.–Deck Seat Back Assy.
602	60200-60299	602A00-602A99	Driver's Seat Back Assy. Comp.
603-604	60300-60499	603A00-604A99	Front Seat Cushion Frame Assy.
605-607	60500-60799	605A00-607A99	Rear Seat Cushion Framing Aux. Seat Cushion Framing Opera Seat Cushion Framing
608-609	60800-60999	608A00-609A99	Driver's Seat Cushion Framing
610-612	61000-61299	610A00-612A99	Front Seat Back Framing
613	61300-61399	613A00-613A99	Rear Seat Back Frame
614	61400-61499	614A00-614A99	Rear Seat Side Pillar–Front Seat Side Board
615	61500-61599	615A00-615A99	Rear Seat Side Panel
616	61600-61699	616A00-616A99	Front Seat Back Panel
617-618	61700-61899	617A00-618A99	Front Seat Adjusting
619-620	61900-62099	619A00-620A99	Driver's Seat Adjustment
621-622	62100-62299	621A00-622A99	Front Seat Back Reinf.
623	62300-62399	623A00-623A99	Driver's Back Reinf.
624	62400-62499	624A00-624A99	Rear Seat Back Reinf.
625	62500-62599	625A00-625A99	Driver & Passenger Seat Support Rear Seat Legs
626-627	62600-62799	626A00-627A99	Front Seat Floor Rest Toe Guard
628	62800-62899	628A00-628A99	Front Seat Back Robe Cord Front Seat Back Ash Receptacle
629-631	62900-63199	629A00-631A99	Front Seat Cushion Cover–Center Seat Opera Seat Cushion
631	63100-63199	631A00-631A99	Front Seat Cushion Spring–Centre Seat Opera Seat Cushion Spring Rear Seat Cushion Spring
632	63200-63299	632A00-632A99	Seat Cushion Pad
633	63300-63399	633A00-633A99	Seat Cushion Facing
634	63400-63499	634A00-634A99	Seat Cushion End Pipe
635	63500-63599	635A00-635A99	Cushion Button
636	63600-63699	636A00-636A99	Seat Cushion Welt Binding
637	63700-63799	637A00-637A99	Front Seat Side Carpet
638	63800-63899	638A00-638A99	Rear Seat Cushion Cover Deck Seat Cushion Cover
640	64000-64099	640A00-640A99	Driver's Seat Rear Cover
642-643	64200-64399	642A00-643A99	Partition Window Operating Mech.
644-645	64400-64599	644A00-645A99	Front Seat Back Cushion Cover
646	64600-64699	646A00-646A99	Seat Back & Pad Assy. Seat Back Division Frame
647	64700-64799	647A00-647A99	Front Seat Back Spring–Centre Seat
648	64800-64899	648A00-648A99	Front Seat Back Pad
649	64900-64999	649A00-649A99	Front Seat Back Cardboard Opera Seat Cardboard Cover Etc., Centre Seat
650	65000-65099	650A00-650A99	Front Seat Back Facing
651	65100-65199	651A00-651A99	Front Seat Back Trim Rail
652	65200-65299	652A00-652A99	Front Seat Back Cushion Welt & Mldg.
653	65300-65399	653A00-653A99	Front Seat Back Wadding
654	65400-65499	654A00-654A99	Front Seat Back Misc. Trim–Hassock Assy.
655	65500-65599	655A00-655A99	Front Seat Back Bellows
656-659	65600-65999	656A00-659A99	Open
660	66000-66099	660A00-660A99	Pedestal Seat
661-665	66100-66599	661A00-665A99	Open
666	66600-66699	666A00-666A99	Rear Seat Back Cover Deck Seat Back Cover
667	66700-66799	667A00-667A99	Rear Seat Back Spring Deck Seat Back Spring
668	66800-66899	668A00-668A99	Rear Seat Back Pad Deck Seat Back Pad
669	66900-66999	669A00-669A99	Rear Seat Cardboard
670	67000-67099	670A00-670A99	Rear Seat Back Facing
671	67100-67199	671A00-671A99	Rear Seat Back Centre Arm Rest Cover
672	67200-67299	672A00-672A99	Rear Seat Arm Rest
673	67300-67399	673A00-673A99	Rear Seat Silencer
674-675	67400-67599	674A00-675A99	Rear Seat Heelboard

IMPORTANT: AS EACH INDIVIDUAL EXPANSION SERIES BECOMES EXHAUSTED OF NUMBERS, ANOTHER SERIES WILL BE ESTABLISHED BY USE OF THE NEXT ALPHABETICAL EXPANSION LETTER SUCH AS "B" THROUGH "Z".

ABBREVIATIONS

GENERAL INFORMATION

A

Accel.	Accelerator
adapt.	adaptor
alt.	alternator
alum.	aluminium
amp.	ampere, amperage
approx.	approximately
AR	as required
assy.	assembly
Auto. trans.	automatic transmission
auto	automatic
aux.	auxiliary
A.C.	air conditioning

B

Brg.	bearing
brkt.	bracket

C

carb.	carburettor
C.I.D.	cubic in. displacement
c/member	cross-member
compt.	compartment
cont'd	continued
C.P.	candle power
c/pin	cotter pin
c/sunk	countersunk
c/shaft	crankshaft
cyl.	cylinder

D

D.C.	Double Contact
dia.	diameter
diaph.	diaphragm
diff.	differential
dist.	distributor
D/R	Dual Range

E

ea.	each
elect.	electrical
eng.	engine
equip.	equipment
ext. tooth	external tooth

F

Fill.	fillister
frt.	front
ft.	foot
f/wheel	flywheel

NUMERIC

2B (2V)	2 barrel
4B (4V)	4 barrel

G

gal.	gallon
gen.	generator
gskt.	gasket
G.V.W.	gross vehicle weight

H

H.D.	heavy duty
hd.	head
hel.	helical
hex.	hexagonel
hsg.	housing
hyd.	hydraulic

I

I.D.	inside diameter
ident.	identified-ication
ign.	ignition
instr.	instrument
insul.	insulator
inter.	intermediate

L

lb.	pound
L/D	light duty
L.H.	left hand
L.H.D.	left hand drive
lugg.	luggage
l/washer	lockwasher

M

max.	max., Maximum Duty
M/D	Medium Duty
mldg.	moulding
mtg.	mounting
mtr.	motor
M/T	Manual Trans.
M/S	Manual Strg.

N

No.	Number

O

o/all	overall
O.D.	outside diameter
o/hd	oval head
o/s	oversize

P

pass.	passenger
pcs.	pieces
pkg.	package-ing
P/S	power strg.
qt.	quart
qtr.	quarter
qty.	quantity

R

Reinf.	reinforcement
reg.	regulator
req'd	required
ret.	retainer
R.H.	right hand
R.H.D.	right hand drive
R.P.M.	revolutions per minute
rr	rear

S

S.C.	single contact
sec.	secondary
ser.	serial
s/member	sidemember
speed	speed
speedo	speedometer
sq.	square
s/ring	snap ring
Std. trans.	standard
std.	standard
strg.	steering
suppt.	support
susp.	suspension

T

tapp.	tapping
temp.	temperature
trans.	transmission

U

univ.	universal
u/s.	undersize

V

vac.	vacuum
vent.	ventilator

W

w/	with
W/B	wheelbase
w/o	without
W/S	windshield
w/strip	weatherstrip

X

X/D	exclusive duty
X/H/D	exclusive heavy duty

LENGTH

INCHES TO MILLIMETRES

in	in	mm	in	in	mm	in	in	mm
1/64	0.015625	0.39687	11/32	0.34375	8.73117	11/16	0.6875	17.46234
1/32	0.03125	0.79374	23/64	0.359375	9.12801	45/64	0.703125	17.85915
3/64	0.046875	1.19061	3/8	0.375	9.52491	23/32	0.71875	18.25608
1/16	0.0625	1.58748	25/64	0.390625	9.92175	47/64	0.734375	18.65289
5/64	0.078125	1.98435	13/32	0.40625	10.31865	3/4	0.75	19.04982
3/32	0.09375	2.38123	27/64	0.421875	10.71549	49/64	0.765625	19.44663
7/64	0.109375	2.77809	7/16	0.4375	11.11240	25/32	0.78125	19.84356
1/8	0.125	3.17497	29/64	0.453125	11.50923	51/64	0.796875	20.24037
9/64	0.140625	3.57183	15/32	0.46875	11.90614	13/16	0.8125	20.63731
5/32	0.15625	3.96871	31/64	0.484375	12.30297	53/64	0.828125	21.03411
11/64	0.171875	4.36557	1/2	0.5	12.69988	27/32	0.84375	21.43105
3/16	0.1875	4.76245	33/64	0.515625	13.09671	55/64	0.859375	21.82785
13/64	0.203125	5.15931	17/32	0.53125	13.49362	7/8	0.875	22.22479
7/32	0.21875	5.55620	35/64	0.546875	13.89045	57/64	0.890625	22.62159
15/64	0.234375	5.95305	9/16	0.5625	14.28737	29/32	0.90625	23.01853
1/4	0.25	6.34994	37/64	0.578125	14.68419	59/64	0.921875	23.41533
17/64	0.265625	6.74679	19/32	0.59375	15.08111	15/16	0.9375	23.81228
9/32	0.28125	7.14368	39/64	0.609375	15.47793	61/64	0.953125	24.20907
19/64	0.296875	7.54053	5/8	0.625	15.87485	31/32	0.96875	24.60602
5/16	0.3125	7.93743	41/64	0.640625	16.27167	63/64	0.984375	25.00281
21/64	0.328125	8.33427	21/32	0.65625	16.66859	1		25.39977
			43/64	0.671875	17.06541			

MILLIMETRES TO INCHES

mm	in	mm	in	mm	in	mm	in
0.01	0.000394	0.4	0.01575	1	0.0394	13	0.5118
0.02	0.000787	0.5	0.01969	2	0.0787	14	0.5512
0.03	0.001181	0.6	0.02362	3	0.1181	15	0.5906
0.04	0.001575	0.7	0.02756	4	0.1575	16	0.6299
0.05	0.001969	0.8	0.03150	5	0.1969	17	0.6693
0.06	0.002362	0.9	0.03543	6	0.2362	18	0.7087
0.07	0.002756	1.0	0.03941	7	0.2756	19	0.7480
0.08	0.003150			8	0.3150	20	0.7874
0.09	0.003543			9	0.3543	25.4	1.000
0.1	0.003937			10	0.3937		
0.2	0.00787			11	0.4331		
0.3	0.01181			12	0.4724		

CONVERSION TABLE

IMPERIAL – METRIC

GENERAL INFORMATION

LENGTH

INCHES TO CENTIMETRES / CENTIMETRES TO INCHES / YARDS TO METRES / METRES TO YARDS

in	cm	cm	in	yd	m	m	yd
1	2.54	1	0.393	1	0.914	1	1.1
2	5.08	2	0.787	10	9.1	2	2.2
3	7.62	3	1.181	20	18.3	3	3.3
4	10.16	4	1.574	30	27.4	4	4.4
5	12.70	5	1.968	40	36.6	5	5.5
6	15.24	6	2.362	50	45.7	6	6.6
7	17.78	7	2.756	60	54.9	7	7.7
8	20.32	8	3.149	70	64.0	8	8.7
9	22.86	9	3.543	80	73.2	9	9.8
10	25.40	10	3.937	90	82.3	10	10.9
11	27.94	15	5.905	100	91.4	20	21.9
12	30.48	20	7.874	200	182.9	30	32.8
18	45.72	25	9.842	300	274.3	40	43.7
24	60.96	30	11.811	400	365.8	50	54.7
30	76.20	35	13.779	560	511.8	60	65.6
36	91.44	40	15.748	600	548.6	70	76.5
42	106.68	50	19.685	700	640.1	80	87.5
48	121.92	60	23.622	800	732.5	90	98.4
54	137.16	70	27.559	900	823.0	100	109.4
60	152.40	80	31.496	1000	914.4	200	218.7
66	167.64	90	35.433	1120	1023.7	300	328.1
72	182.88	100	39.370	2000	1828.8	400	437.4
				2240	2047.3	500	546.8

MASS

POUNDS TO KILOGRAMS / KILOGRAMS TO POUNDS

lb	kg	lb	kg	kg	lb	kg	lb
1	0.454	28	12.7	1	2.2	25	55.1
2	0.907	30	13.6	2	4.4	30	66.1
3	1.4	40	18.1	3	6.6	35	77.1
4	1.8	50	22.7	4	8.8	40	88.2
5	2.3	60	27.2	5	11.0	45	99.2
6	2.7	70	31.8	6	13.2	50	110.2
7	3.2	80	36.3	7	15.4	60	132.3
8	3.7	90	40.8	8	17.6	70	154.3
9	4.1	100	45.4	9	19.8	80	176.4
10	4.5	112	50.5	10	22.0	90	198.4
14	6.3			15	33.0	100	220.5
20	9.1			20	44.1		

CONVERSION TABLE

IMPERIAL – METRIC

TORQUE

POUNDS INCHES	TO	NEWTON METRES	NEWTON METRES	TO	POUNDS INCHES	POUNDS FEET	TO	NEWTON METRES	NEWTON METRES	TO	POUNDS FEET
lbs in		Nm	Nm		lbs in	lbs ft		Nm	Nm		lbs ft
2		0.022	0.1		0.885	1		1.35	1		0.74
4		0.451	0.2		1.770	2		2.70	5		3.68
6		0.678	0.3		2.655	3		4.06	10		7.37
8		0.904	0.4		3.540	4		5.42	15		11.06
10		1.130	0.5		4.425	5		6.80	20		14.75
12		1.356	0.6		5.310	6		8.13	25		18.44
14		1.581	0.7		6.195	7		9.50	30		22.12
16		1.808	0.8		7.080	8		10.84	35		25.81
18		2.033	0.9		7.965	9		12.20	40		29.50
20		2.260	1.0		8.851	10		13.55	45		33.19
30		3.389	2.0		17.702	15		20.25	50		36.88
40		4.519	3.0		26.553	20		27.11	55		40.56
50		5.649	4.0		35.404	25		33.75	60		44.25
60		6.779	5.0		44.255	30		40.67	65		47.94
70		7.909	6.0		53.106	35		47.25	70		51.63
80		9.039	7.0		61.957	40		54.25	75		55.32
90		10.168	8.0		70.808	45		60.75	80		59.00
100		11.298	9.0		79.659	50		67.80	85		62.69
110		12.428	10.0		88.510	60		81.34	90		66.38
120		13.558	11.0		97.361	70		94.90	95		70.07
			12.0		106.212	80		108.46	100		73.76
						90		122.02	120		88.51

POWER

HORSEPOWER TO KILOWATTS				KILOWATTS TO HORSEPOWER			
hp	kW	hp	kW	kW	hp	kW	hp
40	29.8	95	70.9	1	1.34	70	93.8
45	33.6	100	74.6	5	6.7	75	100.5
50	37.3	110	82.1	10	13.4	80	107.2
55	41.0	120	89.5	20	26.8	85	113.9
60	44.8	130	97.0	30	40.2	90	120.6
65	48.5	140	104.4	40	53.6	95	127.3
70	52.2	150	111.9	45	60.3	100	134.0
75	55.9	200	149.2	50	67.0	150	201.0
80	59.7	250	186.5	55	73.7	200	268.0
85	63.4	300	233.8	60	80.4	250	335.0
90	67.1	350	261.1	65	87.1	300	402.0

CONVERSION TABLE

IMPERIAL – METRIC

GENERAL INFORMATION

VOLUME (FLUID)

PINTS TO LITRES

pt	ℓ
0.5	0.284
1	0.568
2	1.14
3	1.70
4	2.27
5	2.84
6	3.40
7	3.97
8	4.55
9	5.11
10	5.68
11	6.25
12	6.82
13	7.38
14	7.95
15	8.52
16	9.09
17	9.66
18	10.22
19	10.79
20	11.36

LITRES TO PINTS

ℓ	pt
0.5	0.9
1	1.8
2	3.5
3	5.3
4	7.0
5	8.8
6	10.6
7	12.3
8	14.1
9	15.8
10	17.6
11	19.3
12	21.1
13	22.9
14	24.6
15	26.4
16	28.1
17	29.9
18	31.7
19	33.4
20	35.2

GALLONS TO LITRES

gal	ℓ
1	4.5
2	9.1
3	13.6
4	18.2
5	22.7
6	27.3
7	31.8
8	36.4
9	40.9
10	45.5
11	50.0
12	54.6
13	59.1
14	63.3
15	68.2
16	72.8
17	77.3
18	81.8
19	86.4
20	90.9
30	136.4
44	200.0

LITRES TO GALLONS

ℓ	gal
1	0.2
2	0.4
3	0.7
4	0.9
5	1.1
6	1.3
7	1.5
8	1.8
9	2.0
10	2.2
20	4.4
30	6.6
40	8.8
50	11.0
60	13.2
70	15.4
80	17.6
90	19.8
100	22.0
150	33.0
200	44.0
1000	220.0

in^3	cm^3
1	16.4
5	82.0
10	164.0
20	328.0
30	492.0
40	656.0
50	820.0
60	984.0
70	1148.0
80	1312.0
90	1476.0
100	1640.0

in^3	cm^3
110	1804.0
120	1968.0
130	2132.0
140	2296.0
150	2460.0
200	3280.0
300	4920.0
400	6560.0
500	8200.0
600	9840.0

cm^3	in^3
1	0.061
5	0.305
10	0.610
50	3.05
100	6.10
150	9.15
200	12.20
250	15.25
300	18.30
400	24.40
500	30.50
600	36.60

cm^3	in^3
700	42.70
800	48.80
900	54.90
1000	61.00
1500	91.50
2000	122.00
3000	183.00
4000	244.00
5000	305.00
6000	366.00

PRESSURE

POUNDS PER SQUARE INCH TO KILOPASCAL

psi	kPa	psi	kPa
1	6.89	22	151.68
2	13.78	24	165.47
3	20.68	26	179.26
4	27.57	28	193.05
5	34.47	30	206.84
6	41.36	35	241.32
7	48.26	40	275.79
8	55.15	50	344.74
9	62.05	60	413.69
10	68.94	70	482.63
20	137.89	80	551.58

KILOPASCAL TO POUNDS PER SQUARE INCH

kPa	psi	kPa	psi
10	1.45	190	27.55
50	7.25	200	29.00
100	14.50	210	30.45
110	15.95	220	31.90
120	17.40	230	33.35
130	18.85	240	34.80
140	20.30	250	36.25
150	21.75	300	43.50
160	23.20	350	50.75
170	24.65	400	58.00
180	26.10	500	72.50

INDEX

GENERAL INFORMATION

CHASSIS SECTION

ACCESSORIES	190A
AIR CLEANER/CHOKE/ACCELERATOR LINKAGE	96
AIR CONDITIONING	190
ALTERNATOR	100
AXLE REAR	40
BATTERY	100
BRAKES	20-24
BRAKE DRUMS	10
BUMPERS	175
CARBURETTORS	95
CIGAR LIGHTER/LONG RANGE LAMPS	150
CLUTCH	75
COOLING SYSTEM	80
DISTRIBUTOR	120
DRIVE SHAFT	46
ELECTRICAL WIRING/SWITCHES	140
ENGINE	60-66
EXHAUST SYSTEM	50
FENDERS	160
FUEL TANK	90
FUEL PUMPS	93
GEAR SHIFT	70A-B
GRILLE	80
HEATER CONTROLS	180
HOOD-ENGINE	160
HORN	130
HUBS	10
INSTRUMENTS	100
JACK	170
LIGHTING	130
MANIFOLD	93
MIRRORS	175
PAINT	190B
RADIATOR	80
SHOCK ABSORBER	180
SPEEDO, CABLES	170
SPRINGS	53-55
STARTER MOTOR	110
STEERING GEAR	35
SUSPENSION, FRONT	30
TRANS.-MANUAL	70A
TRANS.-AUTO.	70B
WATER PUMP	85
WHEELS	10
WIPER/WASHERS	175

Illustrations in this catalogue have been included at rear of applicable grouping.

BODY SECTION

FRONT END	000-030
FLOOR	100B
SIDE ASSY	200-240
BACK	400
TOP AND ROOF	500
SEATS	600
SOFT TRIM SECTION	

Index

PART NAME	SECT.	BASIC NUMBER
A		
Absorber — hood sound	160	16738
Absorber — roof panel front — sound	500	54310
Absorber — roof panel rear — sound	500	54330
Absorber — roof panel — sound	500	54322
Adaptor — alternator mounting bracket	100	10A336
Adaptor Assy. — front suspension	30	3447/8
Adaptor — choke control tube	90	9C786
Adaptor — front suspension lower arm	30	3375
Adaptor — thermostatic choke control inlet tube	90	9C786
Adjuster Assy. — steering gear worm thrust bearing	30	3A670
Adjuster — door lock actuating rod	200	21816
Adjuster — steering gear worm thrust bearing	30	3A537
Air Conditioner — hang on type	190A	19000
Alarm & Wiring Kit — anti theft	190A	19005
Alternator Assy.	100	10300
Anti Rattle — door window lower guide	200	223A58
Apron & Front Side Member Assy. — front	160	16A044/5
Apron — front fender front	160	16044/5
Arm and Bracket Assy. — steering idler	30	3A034
Arm & Bracket Assy. — visor inside	000	04144
Arm and Bushing Assy. — steering idler	30	3A734
Arm and Pivot Assy. — windshield wiper	170	17532/3
Arm — alternator belt adjusting	100	10145
Armature	110	11005
Armature Assy. — wiper motor	170	17A485
Arm Assy. — front bumper	170	17A978
Arm Assy. — gear shift	70B	7302
Arm Assy. — gear shift	70A	7303
Arm Assy. — gear shift	70A	7302
Arm Assy. — rear bumper outer	170	17795/6
Arm Assy. — rocker	90	9376
Arm Assy. — valve rocker	60	6564
Arm Assy. — windshield wiper	170	17526/7
Arm Assy. — windshield wiper output	170	17A436
Arm Assy. — wiper control	170	17540
Arm — check back door	400	44104
Arm — bushing and joint assy. — front suspension	30	3078
Arm — front bumper inner	170	17766/7
Arm — front bumper outer	170	17754/5
Arm — rear bumper inner	170	17787/8
Arm Rest Assy. — console — with column shift only	Soft Trim	045A10
Arm Rest — front door	Soft Trim	27540/1
Arm Rest — door pull	Soft Trim	24100
Arm Rest — front seat back centre	Soft Trim	67260
Arm Rest — rear door	Soft Trim	27540
Arm Rest — rear seat back — centre	Soft Trim	67086
Arm Shaft and Joint Assy. — front suspension upper	30	3392/3
Arm — steering gear pitman	30	3590
Ash Tray Assy. — rear	Soft Trim	27452

PART NAME	SECT.	BASIC NUMBER
B		
Back Assy. — front seat bench	Soft Trim	60136
Back Assy. — front seat bucket	Soft Trim	60136/7
Back Assy. — rear seat	Soft Trim	60032
Back Assy. — rear view mirror exterior	170	17C720
Back Door Assy. — less hinges	400	40012/3
Badge — rear quarter panel (refer 29300 for attaching kit)	200	291B30
Baffle — float chamber	90	9B550
Baffle — float chamber	90	9A550
Baffle — front wheel brake grease	20	2240
Baffle — main gear bearing oil	70A	7040
Baffle — metering body	90	9553
Baffle — valve push rod valley	60	6524
Bag Assy. — jack	170	17005
Bail Assy.	90	9387
Ball and Cage Assy. — steering gear worm thrust bearing	30	3571
Ball — coasting booster valve shuttle	70B	7E195
Ball Joint Assy.	90	9A825
Ball — steering gear worm	30	3647
Band	110	11126
Band Assy. — front (refer also 7A176)	70B	7A162
Band Assy. — intermediate	70B	7D034
Band Assy. — rear (refer also 7A162)	70B	7A176
Band Assy. — reverse	70B	7D095
Bar Assy. — door vent window	200	22296/7
Bar — front bumper impact	170	17757
Bar Assy. — front stabilizer	50	5482
Bar — front stabilizer	50	5494
Bar — luggage compartment hinge torsion	400	44890/1
Bar — rear bumper impact	170	17906
Bar — rear bumperette	170	17776/7
Bar — rear spring shackle outer	50	5627
Bar Rear — stabilizer	50	5A780
Bar — tailgate counter balance torsion (refer also 44890/1)	400	43012/3
Base — front fender side emblem	160	16A240
Battery	100	10655
Bearing Assy. — differential (matched)	40	4220
Bearing Assy. — rear axle drive pinion gear front	40	4615
Bearing Assy. — rear clutch sun gear front	70B	7D480
Bearing Assy. — steering column	30	3517
Bearing Assy. — steering gear sector shaft	30	3576
Bearing Assy. — sun gear thrust	70B	7D234
Bearing Assy. — water pump	80	8530 6261-3
Bearing — camshaft	60	6267, 6270
Bearing — camshaft (refer 6261-3)	60	6270
Bearing — camshaft front intermediate (refer 6261-3)	60	6267
Bearing — clutch pilot	75	7600
Bearing — con rod (also refer 18330)	60	6211
Bearing — control selector tube	70B	7347
Bearing — crankshaft main (lower for XT/XW 188/221 c.i.d. serviced only in kit 18337	60	6333
Bearing — crankshaft main thrust (lower for XT/XW 188/221 c.i.d. serviced only in kit 18347)	60	6337
Bearing — crankshaft — rear intermediate (also refer 6337)	60	6342
Bearing — drive end	100	10094
Bearing — drive shaft — wiper motor	170	17A585

Index

PART NAME	SECT.	BASIC NUMBER
B cont.		
Bearing — gear to planet cover — thrust	70B	7C096
Bearing — main drive gear	70A	7025
Bearing — output shaft (refer 7025)	70A	7065
Bearing — rear servo lever	70B	77406
Bearing — rear wheel	10	1225
Bearing — roller steering assy.	30	3B673
Bearing Set — wiper motor	170	17B585
Bearing — slip ring end	100	10A304
Bearing — steering column tube	70A	7347
Bellcrank Assy. — rear door lock control	200	26448
Bellcrank — shift	70B	7A185
Belt Assy. — front seat bench — combination type	Soft Trim	61201
Belt Assy. — front seat bench — lap type	Soft Trim	61172
Belt Assy. — front seat bucket	Soft Trim	61201/2
Belt Assy. — rear seat — combination type	Soft Trim	613A77
Belt Assy. — rear seat lap	Soft Trim	600A46
Belt — drive (refer chart)	80	8620
Bezel Assy. — rear lamp	130	13A536
Bezel — clock	150	15010
Bezel — control selector indicator dial	70B	7D443
Bezel — control selector lever	70A	7D443
Bezel — door lock handle inside	200	226K23
Bezel — glove compartment door lock	000	060A12
Bezel — instrument cluster main	100	10876
Bezel — top control switch	100	10852
Blade Assy. — fan	80	8600
Blade Assy. — windshield wiper	170	17528
Blade — windscreen wiper less frame	170	17593
Block Assy. — cylinder	60	6010
Block Assy. — wiper motor terminal	170	7A499
Block — rear axle differential pinion	40	4419
Board — armrest console	000	045A11
Board — tonneau floor front	100B	11230
Body	20	2391
Body & Plugs — primary	90	9A511
Body and Plugs — secondary	90	9A513
Body Assy. — heater control	180	18C597
Body Assy. — main	90	9512
Body Assy. — rear lamp	130	13434/5
Body Assy. — rear view mirror exterior	170	17A702/3
Body Assy. — throttle	90	9518
Body Assy. — with doors	000	00001
Body — dial & pointer assy. — temperature indicator	100	10970
Body — fuel pump	90	9413
Body — Governor	70B	7C053
Body — governor oil collector	70B	7D220
Body — interior lamp	130	13787
Body — parking lamp	130	13206/7
Body, Pointer & Dial Assy. — charge indicator	100	10850
Body Pointer and Dial Assy. — fuel lever indicator	90	9305
Body, Pointer and Dial Assy. — oil pressure	90	9273
Bolt — battery clamp	100	10756
Bolt — connecting rod	60	6214
Bolt — cover to housing	40	4346
Bolt — crankshaft main bearing cap (also refer 6065)	60	6345
Bolt — cylinder head (refer also 6345)	60	6065
Bolt — differential carrier to rear axle	40	4347
Bolt — differential case	40	4216
Bolt — flywheel to crankshaft	60	6379
Bolt — front seat back pivot arm	600	60392
Bolt — front suspension lower arm strut	30	3B267
Bolt — gear to pinion case lock	40	4217

PART NAME	SECT.	BASIC NUMBER
B cont.		
Bolt — over running clutch case	70B	7D167
Bolt — pivot	110	11A530
Bolt — rear band servo to servo	70B	77420
Bolt — self locking	70B	7B039
Bolt — spare wheel mounting — wing	10	1A457
Bolt — stabilizer to caliper	20	2B099
Bolt — steering column tube flange	30	3641
Bolt — through fixing	110	11091
Bolt — through fixing	100	10A396
Bolt — wheel hub	10	1107
Booster Assy. — power brakes (refer Section 20A for service details of Assy.)	20	2005
Boot	20	2180
Boot Assy. — gear shift lever	70A	7A271
Boot — clutch slave cylinder	75	7A716
Boot — gear shift lever	70A	7277
Boot — steering column	30	3C611
Boot — wheel brake cylinder	20	2206/7
Bow — tonneau cover	400	40674
Bowl	93	9355
Bowl & plugs — primary	90	9A507
Bowl & plugs — secondary	90	9A508
Brace Assy. — compressor lateral	20	2888
Brace Assy. — compressor lateral	20	2889
Brace Assy. — front door inner panel regulator	200	232A70/1
Brace Assy. — glove compartment lock striker to cowl	000	060A15
Brace — brake pedal support	000	015A26
Brace — convertor housing to engine	70B	7B976/7
Brace — front fender apron to dash lower	160	16C058
Brace — front fender to radiator support	160	16C134/5
Brace — instrument panel to cowl centre	000	043A27
Brace — package tray strainer	400	46912/3
Bracket — accelerator shaft	90	9728
Bracket — accelerator to retracting spring	90	9741
Bracket — alternator arm belt adjusting	100	10A145
Bracket — alternator front	100	10156
Bracket and Holder — steering and ignition lock	30	3675
Bracket & Insulator Assy.	50	5B246/7
Bracket & Insulator Assy. — muffler outlet pipe	50	5A246/7
Bracket & Stiffener Assy. — front suspension bumper	30	3B247/8
Bracket Assy. — alternator mounting	100	10039
Bracket Assy. — back window regulator arm	400	44074
Bracket Assy. — bezel attaching	100	10A906/7
Bracket Assy. — carburettor control shaft support	90	9K723
Bracket Assy. — carburettor control shaft support & kickdown		9B724
Bracket Assy. — damper door control	180	18C652
Bracket Assy. — door window stop lower	200	21790
Bracket Assy. — door window stop upper	200	21742
Bracket Assy. — engine front support	60	6028/9
Bracket Assy. — evaporator case damper door cable	190	19C767
Bracket Assy. — front door equaliser arm	200	23230
Bracket Assy. — front door window glass channel	200	23276/7
Bracket Assy. — front fender extension to radiator support	160	16A010/11
Bracket Assy. — front shock absorber upper	180	18183
Bracket Assy. — front suspension lower — arm strut mounting	30	3486/7
Bracket Assy. — idler pulley support	80	8A653
Bracket Assy. — luggage compartment door lock striker	400	43235

Index

PART NAME	SECT.	BASIC NUMBER
B cont.		
Bracket Assy. — panel cowl top to steering column	000	020A12
Bracket Assy. — power steering pump adjusting	30	3A732
Bracket Assy. — quarter window guide lower	200	298A56
Bracket Assy. — radiator support lower	80	8052
Bracket Assy. — radiator support lower (refer 8052)	80	8A321
Bracket Assy. — radiator support lower (refer 8052)	80	8B381
Bracket Assy. — radiator support upper	80	8A360/1
Bracket Assy. — rear door window glass channel	200	263A52/3
Bracket Assy. — relay shaft to body	70B	7A090
Bracket Assy. — relay shift to trans.	70B	7A096
Bracket Assy. — road lamp mounting	150	15B206/7
Bracket Assy. — shift bellcrank	70B	7C325
Bracket Assy. — spare wheel hold down	400	47105
Bracket Assy. — steering column	30	3676
Bracket Assy. — tailgate latch	400	43172
Bracket Assy. — taxi meter mounting	000	043B63/4
Bracket — bezel instrument panel	100	10845
Bracket — bowl vent rod	90	9E520
Bracket — carburettor air cleaner	90	9A627
Bracket — choke control	90	9595/7
Bracket — circuit breaker mounting	140	14A066
Bracket — compressor mounting	20	2882
Bracket — console arm rest	000	045B34
Bracket — cowl top panel to front fender apron	000	02294/5
Bracket — cut out switch mounting	190	19758
Bracket — dashpot mounting	90	9B550
Bracket — dome lamp mounting	130	13879
Bracket — door vent window upper pivot	200	21465/5
Bracket — drive end	110	11358
Bracket — engine front support insulator	60	6046/ 6B071
Bracket — engine front support insulator (refer 6045)	60	6B071
Bracket — engine rear support	60	6096/6120
Bracket — engine rear support — (refer 6096	60	6120
Bracket — fixing sun roof	500	502L14
Bracket — fender to pillar mounting	160	16A005/6
Bracket — float shaft	90	9A517
Bracket — frame to body side rear inner	500	502A14
Bracket — front bumper guard	170	17B794/5
Bracket — front bumper mounting outer	170	17B760/1
Bracket — front fender mounting rear lower	160	16C174
Bracket — front seat back latch	600	62614
Bracket — front suspension lower arm mounting lower	30	3A013
Bracket — front wheel brake hose	20	2082
Bracket — heater control motor mounting	180	18B258
Bracket — heater control mounting	180	18532
Bracket — instrument cluster mounting	000	04420/1
Bracket — instrument panel to cowl side	000	04366
Bracket — instrument panel to cowl side	000	04367
Bracket — luggage compartment door hinge to wheelhouse	400	42738/9
Bracket — mounting	50	5A782
Bracket — muffler inlet pipe	50	5291
Bracket — parking brake cable to dash	20	22854
Bracket — parking brake cable support	20	2519
Bracket — parking brake spring	100B	111A36
Bracket — positive crankcase ventilation hose	60	6788
Bracket — quarter glass window	200	305A02/3
Bracket — quarter regulator motor mounting	200	303A90/1

PART NAME	SECT.	BASIC NUMBER
B cont.		
Bracket — radiator grille mounting — upper	80	8A382
Bracket — rear axle bumper	40	4731
Bracket — rear bumper guard lower	170	17C856
Bracket — rear bumper guard upper	170	17B876
Bracket — rear door window regulator motor	200	270A02
Bracket — rear floor pan to rear crossmember	100B	11344/5
Bracket — rear pillar to belt rail	200	28335
Bracket — rear wheel brake hose support	20	2073
Bracket — rear view mirror	170	17727
Bracket — rear view interior mirror	170	17698
Bracket — roof front support extension	500	512A72/3
Bracket — spare wheel retaining	10	1402
Bracket — stabilizer bar link mounting	50	5A786
Bracket — stabilizer bar mounting	50	5486
Bracket — steering idler arm	30	3351
Bracket — tailgate counter balance torsion bar	400	430A30
Bracket — tailgate outside handle	400	430A66
Bracket — taxi meter mounting mini Argo	000	043A63
Bracket — throttle emission control	90	9J586
Bracket — tonneau floor centre	100B	11137
Bracket — turn signal flasher mounting	130	13351
Brush & Spring Set	100	10347
Brush & Spring Set (refer 10347)	100	10B341
Brush & Spring Set (refer 10347)	100	10A341
Brush and Terminal Assy. — wiper motor	170	17B566
Brush Assy.	120	12122
Brush Box Moulding	100	10320
Brush — gear wiper motor	170	17A567
Brush — holder	100	10351
Brush Set	110	11057
Brush Spring Set Wiper Motor	170	17B567
Bulb Assy.	130	13712
Bulb Assy. — dome courtesy lamp (refer 13465/6)	130	13730
Bulb Assy. — headlamp sealed beam	130	13007
Bulb Assy. — lamp	130	13464-6
Bumper Assy. — front suspension	30	3025
Bumper Bar Guard — kit	190A	18412
Bumper — drive pinion bearing retainer	40	4298
Bumper — hood to fender	160	16758
Bumper — rear axle	40	4730
Bumper — rear seat back	600	605A16
Bumper — rear — window stop	400	44057
Bumper Strike — rear seat back	600	613A57
Bumper — tailgate	400	40714
Bumper Assy. — tail gate to bumperette	170	17C762/3
Bush — accelerator shaft	90	9A728
Bush — bearing	110	11357
Bush — comm. End	110	11052
Bush — drive end	110	11395
Bush — extension housing	70B	7A034
Bushing Assy. — rear spring (refer also 5737)	50	5781
Bushing Assy. — steering idler arm lower	30	3358
Bushing Assy. — steering idler arm upper	30	3356
Bushing — brake and clutch mounting brake	20	2471
Bushing — brake master cylinder push rod	20	2474
Bushing — cam damper door	190	19C771
Bushing — choke housing	90	9851
Bushing — control shaft to trans. rod	70B	7A440
Bushing — door hinge	200	22841
Bushing — door window glass bracket	200	23258
Bushing — drive	100	11135
Bushing — extension housing	70A	7A034
Bushing — field terminal insulator	110	11107

Index

PART NAME	SECT.	BASIC NUMBER
B cont.		
Bushing — forward clutch hub	70B	7E059
Bushing — front oil pump	70B	7B258
Bushing — front pump drive gear	70B	7B259
Bushing — front pump support front	70B	7B261
Bushing — front pump support — rear	70B	7D018
Bushing — front suspension lower arm	30	3069
Bushing — front suspension lower arm strut — front	30	3A140
Bushing — front suspension lower arm strut — rear	30	3A225
Bushing — front suspension upper arm inner shaft	30	3068
Bushing — gear shift arm insulator	70A	7343
Bushing — gear shift arm insulator	70B	7343
Bushing — gear shift lever shaft	70B	7A133
Bushing — gear shift tube	70A	7335
Bushing — heater temperature regulator control shaft	180	18C327
Bushing — input shaft	70B	7120
Bushing — Lower	120	12123
Bushing — output shaft	70B	7B256
Bushing — planetary gear drum support flange — inner		7B257
Bushing — planetary support	70B	7A132
Bushing — rear brake drum support (refer 7B257)	70B	7B157
Bushing — rear oil pump body	70B	7B260
Bushing — rear spring rear shackle (also refer 5781)	50	5737
Bushing — reverse brake drum	70B	7D001
Bushing — spring retaining	90	9F569
Bushing — sun gear	70B	7D065
Bushing — tailgate counter balance torsion bar	400	43074
Bushing — trans. case	70B	7025
Bushing — throttle shaft	90	9B508
Bushing — upper	120	12120
Button Assy. — door trim	Soft Trim	644A25
Button Assy. — gear shift lever release	70B	7C488
Button Assy. — seat trim	Soft Trim	644A25
C		
Cable and Conduit Assy. — parking brake	20	2853
Cable & Latch Assy. — rear seat back	600	613A58
Cable Assy. — battery to ground	140	14301
Cable Assy. — battery to starter relay	140	14300
Cable Assy. — brake shoe auto. adjusting lever	20	2A178
Cable Assy. — control selector linkage	70B	7D246
Cable Assy. — defroster control	180	18548
Cable Assy. — front seat release	600	618B94
Cable Assy. — heater temperature control	180	18518
Cable Assy. — kickdown	70B	7A186
Cable Assy. — parking brake intermediate	20	2A815
Cable Assy. — parking brake rear	20	2A604
Cable Assy. — speedometer	170	17260
Cable Assy. — starter motor relay to starter motor	140	14431
Cable Assy. — tailgate check	400	43052
Cable Assy. — water valve	180	18B495
Cable — glove box door check	000	060A08
Cable/Handle Assy. — hood catch control	160	16A916
Cable — inner speedo		17262
Caliper Assy. — front wheel brake — disc brakes	20	2B118/9
Cam — accelerator pump diaphragm operating	90	9526
Cam and Bolt Assy. — front suspension lower arm adjusting	30	3B236
C cont.		
Cam and Shaft Assy. — high and intermediate gearshift	70A	7280
Cam and Shaft Assy. — low and reverse gear shift	70A	7282
Cam Assy.	120	12210
Cam — damper door	190	19C772
Cam — downshift valve	70B	7D261
Cam — fast idle	90	9597
Cam — front suspension lower arm adjusting rear	30	3B238
Camshaft Assy.	60	6250
Cam Switch — inhibitor	70B	7A248
Cap & Dipstick — power steering pump	30	3A006
Cap Assy. — fuel tank filler	90	9030
Cap Assy. — hub steering wheel	30	3623
Cap Assy. — oil filter	60	6766
Cap Assy. — radiator	80	8100
Cap — battery	100	10720
Cap — brake and clutch master cylinder	120	2162
Cap — centre body pillar finish	200	24452
Cap — end plate cover	110	11053
Cap — grease front wheel	10	1131
Cap or Cover — wheel hub	10	1130
Cap — pillar quarter upper	200	291A30/1
Cap — tailgate outside belt moulding	400	425B14/5
Cap — valve push rod	60	6550
Cap — water pump housing	80	8A500
Cap — wheel hub centre piece (refer 1130)	10	1A130
Carburettor Assy.	90	9510
Carpet Assy. — front floor — column shift only	Soft Trim	13000
Carpet Assy. — front floor — floor shift only	Soft Trim	13000
Carpet Assy. — rear floor	Soft Trim	13054
Carpet — rear floor rear	Soft Trim	13182
Carrier Assy. — differential	40	4141
Case Assy. — transmission	70A	7005/6
Case — evaporator	190	19A626
Case — transmission	70B	7005
Catch — glove compartment door lock	000	06064
Centre — support & plug assy.	70B	7A130
Chain — timing	60	6268
Channel Assy. — back window glass	400	422A08
Choke Rod	90	9A599
Cigar Lighter	190A	15A044
Circlip — clutch master cylinder	75	7A546
Clamp & U bolt Assy. — muffler inlet pipe	50	5252
Clamp Assy. — back up lamp switch lower	150	15517
Clamp Assy. — steering column upper	30	3A508
Clamp — battery hold down	100	10718
Clamp — choke outer cable	90	9792
Clamp — distributor to cylinder block	120	12270
Clamp — inlet manifold heater hose	180	18954
Clamp — muffler inlet pipe	50	5270
Clamp — muffler outlet pipe	50	5A272
Clamp — rear spring	50	5724
Clamp — shield — manifold to starter motor	90	9A435
Clamp — spindle connecting rod	30	3287
Clamp — steering column lower	30	3668
Clamp — steering gear ball return guide	30	3544
Clamp — terminal housing	120	12144
Clamp — thermostat choke housing	90	9842
Clamp — thermostat heater	90	9C721
Cleaner Assy. — carburettor air	90	9600
Clip — brake master cylinder cap retaining	20	2B245
Clip — choke link	90	9A548
Clip — disc pad hold down pin	20	2B066

Index

PART NAME	SECT.	BASIC NUMBER
C cont.		
Clip — door glass outer	200	222B08
Clip — door lock control link retaining	200	21954
Clip — door vent window weatherstrip	200	214A18
Clip — engine to transmission vacuum tube	70B	7B085
Clip — headlamp retaining ring — anchor	130	13088
Clip — headlining retaining	500	51026
Clip — holder ash tray retaining	200	27604
Clip — hose — sun roof	500	502K33
Clip — instrument panel pad retaining	000	04278
Clip — oil pan screen retainer	70B	7A097
Clip — parking brake	20	2814
Clip — power steering pressure and return hose	30	3E506
Clip — retaining — sun roof	500	502L26
Clip — retaining tailgate handle	400	44036
Clip — rod end clevis	90	9825/6
Clip — seat belt stowage attaching with std. belts	600	602A10
Clip — strainer screen	90	9A575
Clip — transmission oil tube	70B	7C008
Clip — visor arm	000	04132
Clip — window regulator switch	140	14559
Clip — window top inner door	200	222A44
Clip — windshield wiper adaptor and connecting arm	170	17531
Clip — wiper arm pivot	170	17A508
Clock Assy.	190A	15000
Clock Assy. — (Also refer section 190A)	150	15000
Cluster Assy. — auxiliary instrument — fuel & temperature	100	10D944
Cluster Assy. — auxiliary instrument — volts & oil	100	10B944
Clutch and Pulley Assy. — compressor	20	2884
Clutch Assembly — fan	80	8A616
Clutch Assy. — planetary gears	70B	7A089
Clutch — holdout ring assy.	40	4A351
Clutch — pedal and bracket assy.	75	7A522
Coil Assy.	120	12029
Coil Assy. — starter motor	110	11082
Coil — field L.H.	110	11083
Coil — field lower	110	11084
Coil — field R.H.	110	11085
Collar	110	11B353
Collar — drive end	100	10A344
Collar — shaft	120	12195
Column Assy. — steering	30	3C529
Compartment Assy. — glove	000	06010
Compartment Assy. — spare wheel	400	47202
Compressor Assy. — air conditioner	190	19703
Compensator Assy. —Hot idle	90	9B532
Condensor	120	12300
Condenser and Tube Assy.	190	19A615
Cone and Roller Assy. — differential	40	4221
Cone and Roller Assy. — drive pinion bearing rear	40	4625
Cone and Roller Assy. — drive pinion gear front bearing	40	4621
Cone and Roller Assy. — front wheel bearing — outer	10	1216
Cone and Roller Assy. — front wheel inner bearing	10	1201
Cone and Roller — drive pinion bearing rear	40	4630
Connection — water outlet	80	8592
Connector Assy. — oil tube	70B	7D273
Connector — distributor vacuum tube	120	12224
Connector — engine to transmission vacuum tube	70B	7B086
Connector — engine to transmission vacuum tube	70B	7B087
Connector — parking brake cable	20	2A790
Connector — register	190	19C732

PART NAME	SECT.	BASIC NUMBER
C cont.		
Connector — windshield washer hose	170	17601
Console Assy. & Arm Rest — with column shift only	Soft Trim	045A05
Console Assy. — with column shift only	Trim	045A06
Console Assy. — with floor shift (for handling option drill (2) holes for badge)	Soft Trim	045A06
Control and Bracket Assy. — vacuum	90	9S514
Control Assy. — air	180	18A574
Control Assy. — air	000	01890/1
Control Assy. — carburettor choke	90	9700
Control Assy. — gear shift	70A	7400
Control Assy. — heater	180	18549
Control Assy. — heater air conditioner	190	19930
Control Assy. — main	70B	7A100
Control Assy. — parking brake	20	2780
Control Assy. — remote control mirror	170	17A736
Control Assy. — tailgate lock release	400	43170
Convertor Assy.	70B	7902
Core & Seal — heater	180	18B539
Core Assy. — evaporator	190	19860
Core Assy. — heater	180	18476
Countershaft	70A	7111
Cover — accelerator pump	90	9528
Cover — armrest hinge console — with column shift only	Soft Trim	045A16/7
Cover Assy. — armrest console — with column shift only	Soft Trim	045A22
Cover Assy. — centre armrest — front & rear seat	Soft Trim	644A18
Cover Assy. — console	Soft Trim	045A23
Cover Assy. — convertor	70B	7950
Cover Assy. — cylinder front — timing	60	6019
Cover Assy. — front seat back — bench	Soft Trim	64416
Cover Assy. — front seat back — bucket	Soft Trim	64416/7
Cover Assy. — front seat bench	Soft Trim	62900
Cover Assy. — front seat cushion — bucket seat	Soft Trim	62900/1
Cover Assy. — horn	130	13K802
Cover Assy. — quarter wheel house		31016/7
Cover Assy. — rear seat	Soft Trim	66600
Cover Assy. — rear seat back armrest	Soft Trim	672A44
Cover Assy. — rear seat cushion		63804
Cover Assy. — seat belt adjuster	Soft Trim	602A11
Cover Assy. — spare wheel	400	47043
Cover Assy. — spare wheel	400	470A42
Cover Assy. — spindle connecting rod end ball	30	3332
Cover Assy. — thermostat	90	9848
Cover Assy. — valve rocker arm	60	6582
Cover — back window regulator access hole	400	40790
Cover — band assy.	110	11125
Cover — bucket front seat bucket side inner	Soft Trim	629A06
Cover — brake adjusting hole	20	2092
Cover — case access	70A	7A035
Cover — case access	70A	7222
Cover — centre body pillar finish		24592/3
Cover — choke control diaphragm	90	9J554
Cover — convertor housing lower	70B	7986
Cover — cylinder front (refer 6019)	60	6059
Cover — dash panel hydraulic clutch master cylinder hole	000	10799
Cover — door window regulator handle	200	23362

Index

PART NAME	SECT.	BASIC NUMBER
C cont.		
Cover — drive housing sun roof	500	51919
Cover — dust clutch master cylinder	75	7A545
Cover — economizer valve	90	9930
Cover — flywheel housing lower	60	6366
Cover — fuel pump	90	9343
Cover — fuse box	140	14A076
Cover — heater motor dash panel opening	180	18A475
Cover — instrument panel heater control opening	000	04496
Cover — instrument panel radio opening	000	04371
Cover — lower panel centre body pillar	Soft Trim	24478/9
Cover — luggage compartment door latch	400	432A30
Cover — oil pressure reg. body	70B	7A141
Cover — oil pump	60	6616
Cover — panel cowl top	000	020B04
Cover — piston	30	3A745
Cover — rear axle differential housing	40	4033
Cover — reverse band servo	70B	7D036
Cover — roof drip moulding front — corner front	500	51762
Cover — seat belt mounting	Soft Trim	610A75
Cover — secondary	90	9507
Cover — servo	70B	7D027
Cover — sliding roof panel	Soft Trim	53700
Cover — steering gear housing	30	3580
Cover — sun roof — interior panel	500	519A19
Cover — switch solenoid	110	11060
Cover — tailgate inside	400	40726
Cover — thermostat choke heater	90	9A705
Cover — vent air outlet duct — L.H. inst. panel	000	019A75
Cover — vinyl roof (cut hole for sliding sun roof	Soft Trim	53700
Crank Assy. — sun roof	500	502K49
Crankshaft	60	6303
Cup and Magnet Assy. — wiper motor	170	17B584
Cup — clutch slave cylinder	75	7A513
Cup — differential	40	4222
Cup — front wheel bearing inner	10	1202
Cup — front wheel bearing — outer	10	1217
Cup or Clip — brake shoe hold down	20	2066
Cup — plug	70B	7A135
Cup — pump piston	90	9572
Cup — rear axle drive pinion gear bearing	40	4616
Cup — rear axle drive pinion gear rear bearing	40	4628
Cup — steering gear worm thrust bearing	30	3552
Cup Support — oil pan screen	70B	7A097
Cup — wheel brake cylinder front/rear	20	2201/2
Cushion Assy. — front seat bench	Soft Trim	60050
Cushion Assy. — front seat bucket	Soft Trim	60050/1
Cushion Assy. — rear seat	Soft Trim	60080
Cylinder Assy.	60	6009
Cylinder Assy. — brake master	20	2140
Cylinder Assy. — clutch	70B	7A360
Cylinder Assy. — clutch master	75	7A543
Cylinder Assy. — clutch slave	75	7A508
Cylinder Assy. — door lock	400	43505
Cylinder Assy. — front brake	20	2061/2
Cylinder Assy. — front door lock	200	21984
Cylinder Assy. — ignition lock	110	11582
Cylinder Assy. — rear wheel brake	20	2261/2
Cylinder Block & Piston Assy.	60	6012

D

PART NAME	SECT.	BASIC NUMBER
Damper Assy. — crankshaft	60	6316
Damper Assy. — ventilator air valve	000	01862/3
Damper — rear spring	50	5A669
Dashpot Assy.	90	9B549
Deadener — package tray strainer sound	400	46689
Deadener — rear floor rear	100B	130B56
Decals	190A	10A339
Deflector Assy. — air	000	001A04
Deflector Assy. — front bumper air lower	170	17B769
Deflector — drive pinion oil seal dust	40	4859
Deflector — front bumper stone	170	17A779
Deflector — front fender air scoop	160	16E106/7
Deflector — radiator air side	80	8310
Deflector — rear bumper stone	170	17808
De Fogger — rear window	190A	18397
Dehydrator Assy.	190	19959
Detent — gear shift control lever	70A	7E218
Dial Assy. — control selector	70B	7A213
Dial — fuel and temperature indicator	90	9A284
Dial — trans. control indicator	70B	7B213
Diaphragm	20	2A365
Diaphragm & Retainer Assy. — choke control	90	9J549
Diaphragm Assy. — choke kick	90	9B549
Diaphragm Assy. — throttle valve control	70B	7A377
Diaphragm — accelerator pump	90	9B559
Diaphragm — secondary throttle	90	9503
Diaphragm — vacuum control	120	12370
Differential Assy.	40	4026
Differential & Carrier Assy.	40	4200
Differential Valve and Pressure Control Assy.	20	2B257
Diode — negative	100	10378
Diode — positive	100	10374
Disc Assy. — clutch	75	7550
Disc Tone Control	180	18830
Distributor Assy.	120	12100
Door and Ignition Lock Set	200	22050
Door and Seal Assy. — heater temperature control valve	180	18C551
Door Assy. — console glove box compartment — floor shift only — (bucket seats with sports console)	Soft Trim	060A70
Door Assy. — evaporator case damper	190	19469
Door Assy. — fuel filler opening	400	405A26
Door Assy. — front	200	20124/5
Door Assy. — glove compartment	000	06024
Door Assy. — luggage compartment	400	40110
Door Assy. — rear	200	24630/1
Door Assy. — spare wheel compartment	400	47286
Door — headlamp	130	13064
Door Headlamp (refer 13064)	130	13052/3
Dowel — cyl. block to flywheel housing	60	6397
Dowel — cylinder head to block	60	6A008
Dowel — hood lock	160	16929
Dowel — spare wheel compartment door latch	400	470A66
Drain Tube	100B	11258
Drive Assy.	110	11350
Drive Assy. — back window regulator	400	40964
Driving Housing — sun roof	500	502C19
Drum and Planetary Gear Assy. — rear brake	70B	7A398
Drum and Secondary Sun Gear — front brake	70B	7A626
Drum Assy.	70B	7D044
Drum Assy. — rear wheel brake	10	1126
Drum Assy. — reverse brake	70B	7C498
Duct and Connector Assy.	190	19C932
Duct & Valve Carburettor — air cleaner	90	9A626
Duct — air conditioner	190	19B680/1

Index

PART NAME	SECT.	BASIC NUMBER
D cont.		
Duct Assy. — vent air outlet	000	01934/5
Duct — ventilation	190	19K680/1
Dust Reflector — kit	190A	19008
E		
Eccentric — camshaft fuel pump drive	60	6287
Economizer	90	9A565
Elbow — inlet manifold	90	9B425
Elbow — oil filter cap	60	6767
Element — air cleaner	90	9601
Element — pre-carburettor — air cleaner	90	9A601
Emblem — front fender side (refer 29300 for attaching kit)	160	16237
Emblem — hub steering wheel	30	3649
End Assy. — steering spindle arm connecting rod	30	3289/90
Engine Compartment	000	01601
Equalizer — parking brake cable	20	2A602
Escutcheon Assy. — sun roof	500	502K47
Escutcheon — mirror rear view	170	17B685
Evaporator Assy.	190	19850
Extension Assy. — front seat back support arm	600	608A84
Extension Assy. — front side member — outer	100B	101A22/3
Extension Assy. — rear seat back rear	600	616A40
Extension Assy. — transmission	70B	7A039
Extension Assy. — transmission	70A	7A039
Extension — floorside inner member front	100B	10066/7
Extension — front body upper outer pillar	000	02562/3
Extension — front fender rear splash shield	160	16B572/3
Extension — lower back panel	400	40330
Extension — luggage compartment door lock	400	43283
Extension Member — rear floor cross	100B	106A18/9
Extension — plate rear spring U bolt	50	5A798
Extension — quarter panel rear (refer also 278A52)	200	28058/9
Extension — quarter panel upper rear	200	28072/3
Extension — quarter wheel house to roof outer pillar	200	28230
Extension — quarter window regulator panel to floor	200	30484/5
Extension Rail — roof side outer rear	500	513A46/7
Extension — roof side inner rail	500	513A34/5
Extension — roof side outer rear rail to wheelhouse	500	513A44/5
Extension — steering column tube flange	30	3790
F		
Fan	100	10A310
Fan — heater blower	180	18504
Fender Assy. — front	160	16005/6
Field Assy. — compressor clutch	20	2987
Field Coil Assy.	100	11081
Filler Assy. — rear floor side front	100B	112A28
Filler — Floor Side Cover Outer Member Front End	100B	10170/1
Filler — pillar centre body outer front	200	243A28
Filler — pillar centre body outer rear	200	243A26
Filler — quarter panel upper front	200	28060/1
Filler — quarter window	200	29244
Filter Assy. — fuel	90	9155

PART NAME	SECT.	BASIC NUMBER
F cont.		
Filter Assy. — oil	60	6731
Filter — distributor vacuum control valve	120	12A120
Filter — Felt	20	2005/A16
Filter — foam	20	2005/A15
Filter Washer — windshield pick-up tube	170	17K608
Finger Assy. — shift control	70A	7C124
Finisher — front seat reclining mechanism handle	600	62188
Finisher — reclining mechanism front seat	600	60342/3
Fire Extinguisher	190A	
Fitting Assy. — intake manifold vacuum outlet	90	9A474
Fitting — fuel transfer tube	90	9A520
Fitting — oil pressure sender	90	9B339
Flange and Insulator Assy. — steering	30	3A525
Flange Assy. — universal joint axle end	40	4851
Flange — coil retaining	110	11106
Flange — steering column tube	30	3511
Flasher Unit — turn signal	130	13350
Float Assy.	90	9550
Flywheel Assy.	60	6375
Fork — gear shift	70A	7230
Fork — gear shift	70A	7231
Frame and Glass Assy. — door vent window	200	21406/7
Frame Assy. — back window upper	400	42208
Frame Assy. — front door glass	200	22220/1
Frame — back window upper	400	42220
Frame — head lining — sun roof	500	502K73
Fuse Block Assy.	140	14A067
Fuse — various locations	140	14526
G		
Gasket	90	9563
Gasket — air horn	90	9519
Gasket — air cleaner to carburettor	90	9654
Gasket — back window regulator drive	400	422B22
Gasket — booster venturi support	90	9A536
Gasket — bowl	90	9364
Gasket — brake shield splash	20	2B160
Gasket — carburettor to intake manifold	90	9447
Gasket — carburettor to spacer (refer also 9561)	90	9455
Gasket — carrier rear axle	40	4035
Gasket — case access cover	70A	7A036
Gasket — case access gear	70A	7223
Gasket — crankcase ventilator	60	6870
Gasket — cylinder front cover — timing	60	6020
Gasket — cylinder head	60	6051
Gasket — diaphragm vacuum connector	120	12320
Gasket — economizer body	90	9A588
Gasket — economizer cover	90	9563
Gasket — exhaust	90	9A431/2
Gasket — exhaust manifold to muffler inlet pipe	90	9450
Gasket — extension housing	70B	7086
Gasket — extension housing	70A	7086
Gasket — float bowl	90	9561
Gasket — front brake line connector	20	2149
Gasket — front oil pump to case	70B	7A136
Gasket — front wheel brake backing plate	20	2044
Gasket — front wheel brake grease baffle	20	2026
Gasket — fuel bowl screw	90	9592
Gasket — fuel filler cap	90	9035
Gasket — fuel inlet fitting	90	9229
Gasket — fuel inlet seat	90	9569
Gasket — fuel pump mounting	90	9417
Gasket — fuel tank sender	90	9276

Index

PART NAME	SECT.	BASIC NUMBER
G cont.		
Gasket – fuel valve seat	90	9A522
Gasket – heater core lower	180	18B536
Gasket – heater core upper	180	18618
Gasket – input shaft bearing	70A	7051
Gasket – instrument cluster	100	10A949
Gasket – intake manifold	90	9433/9461
Gasket – intake manifold to head (refer 9433)	90	9461
Gasket – metering body	90	9A618
Gasket – motor mounting heater blower	180	18583
Gasket – oil pan	70B	7A191
Gasket – oil pan drain plug	60	6734
Gasket – oil pump cover to inlet tube flange	60	6626
Gasket – oil pump to block	60	6659
Gasket or Diaphragm – filler cap	20	2167
Gasket – parking lamp lens	130	13210/1
Gasket – power by-pass jet	90	9B517
Gasket – power by-pass jet	90	9608
Gasket – pump discharge nozzle	90	9580
Gasket – pump nozzle	90	9B539
Gasket – rear axle differential housing cover	40	4036
Gasket – rear brake backing plate (refer 1001)	20	2256
Gasket – rear brake carrier plate	10	1001
Gasket – rear lamp lens	130	13460/1
Gasket – rear oil pump to case	70B	7A222
Gasket – rear spoiler support	400	44228/9
Gasket – rear wheel bearing retainer	10	1001
Gasket – servo cover	70B	7D026
Gasket Set	90	9502
Gasket Set – engine oil pan	60	6781
Gasket Set – engine overhaul	60	6008
Gasket – solenoid	110	11065
Gasket – speedometer dial	170	17K317
Gasket – steering gear housing cover	30	3581
Gasket – thermostatic choke housing	90	9853
Gasket – thermostatic choke housing	90	9871
Gasket – throttle body	90	9A518
Gasket – throttle body to main body	90	9516
Gasket – throttle control valve	70B	7B426
Gasket – valve	90	9367
Gasket – valve body separator plate	70B	7D100
Gasket – valve rocker arm cover	60	6584
Gasket – ventilation air inlet to cowl top	000	01999
Gasket – water outlet connection	80	8255
Gasket – water pump	80	8507
Gasket – water pump cover	80	8513
Gasket – windshield wiper motor seal	170	17C430
Gate Assy. – tail less hinges	400	40709
Gear and Bushing Assy. – reverse idler	70A	7141
Gear and Shaft Assy. – wiper output	170	17A434
Gear Assy. – forward sun	70B	7A348
Gear Assy. – front clutch sun	70B	7A399
Gear Assy. – primary sun	70B	7A399
Gear Assy. – second speed	70A	7107
Gear Assy. – steering	30	3504
Gear Assy. – sun	70B	7D063
Gear – countershaft	70A	7113
Gear – flywheel starting ring	60	6384
Gear – low speed constant mesh	70A	7A029
Gear or Shaft Assy. – main drive	70B	7015/7
Gear – output shaft parking	70B	7A233
Gear – output shaft ring	70B	7A153
Gear – reverse idler sliding	70A	7D223
Gear Set – rear axle	40	4209
Gear – driven (distributor)	120	12390
Gear – speedometer (refer chart)	170	17271
Gear – rear axle differential	40	4236
Gear – speedo drive (refer sections 70A & 70B)	170	17285
G cont.		
Gear – third speed	70A	7B340
Gear Trans Low & Reverse	70A	7100
Glass Assy. – windshield	000	03100
Glass – back door window	200	25722
Glass – back window	400	42006
Glass – body side fixed window rear	200	297K26
Glass – door vent window	200	21412/3
Glass – front door window	200	21410/1
Glass – quarter window	200	29710/1
Glass – rear door stationary window	200	26872/3
Glass – rear door window	200	25712/3
Glass – window front body side fixed	200	200K49
Governor Assy.	70B	7C063
Grille Assy. – quarter vent air	200	280B62
Grille Assy. – radiator	80	8200
Grille – cowl top vent	000	02228
Grille – quarter vent air	200	280B10/1
Grommet	190	19C819
Grommet Assy. – windshield wiper motor mounting bracket	170	17C431
Grommet – carburettor lever	90	9A722
Grommet – door lock knob	200	21999
Grommet – fuel tank filler pipe	90	9080
Guard Assy. – fuel tank	90	9099
Guard Assy. – front bumper	170	17996
Guard Assy. – rear bumper	170	17984
Guard – front/rear door edge	200	209A10
Guide Assy. – quarter window	200	29752
Guide Assy. – rear with cable & lifter – sun roof	500	502B20
Guide – back door lock outside striker	400	404A18/9
Guide – back door rod	400	431K08
Guide – door window lower	200	222A92
Guide – door window upper	200	22362
Guide – front band servo piston	70B	7A269
Guide Front – brake shoe auto. adjusting lever	20	2A179
Guide – plate clutch	40	4A323
Guiderail – sun roof	500	502C06/7
Guide – steering gear ball return	30	3523
Guide – sun roof	500	502L16/7
Gusset – dash panel to floor sidemember	000	021A14/5
Gusset – floor side member to front side member reinforcement	100B	10048
Gusset – front body upper outer pillar	000	025A36/7
Gusset – front suspension arm adaptor to side member	30	3378/9
Gusset – front suspension arm adaptor to side member	30	3A031

H

PART NAME	SECT.	BASIC NUMBER
Handle and Housing Assy.	400	430A70
Handle & Shank Assy. – turn signal	130	13305
Handle Assy. – back door locking inside	400	434A00
Handle Assy. – back window regulator	400	44009
Handle Assy. – door vent window	200	22916/7
Handle Assy. – door window regulator	200	23342
Handle Assy. – front door outside	200	22400/1
Handle Assy. – front seat track adjusting	60	61753
Handle Assy. – gear shift lever floor	70B	7213
Handle Assy. – quarter window regulator	240	30322
Handle Assy. – rear door outside (refer also 22404/5)	200	26600/1
Handle Assy. – tailgate	400	431C62
Handle – cup plastic – sun roof	500	502K30
Handle – door inside	200	22600/1
Handle – front seat back adjusting	600	61198
Handle – front seat back latch	600	62622

Index

PART NAME	SECT.	BASIC NUMBER
H cont.		
Handle — parking brake	20	2782
Hanger — rear spring	50	5775
Hanger — rear spring (also refer 5775)	50	5770
Harness Assy. — heater hose and wiring	180	18C560
Head Assy. — cylinder	60	6049
Head — clip ring end	100	10334
Head — drive end	100	10333
Headlamp Guard	190A	13005
Headlining Assy. — less supports — except with sun roof	Soft Trim	51916
Headlining Assy. — less supports — with sun roof	Soft Trim	51916
Heat Shield — manifold to starter motor	90	9A434
Heater Assy.	180	18478
Heater Housing	80	18A584
Hinge and Check Assy. — front door lower	200	22806/7
Hinge Assy. — back door lower	400	429A14/5
Hinge Assy. — back door upper	400	42900/1
Hinge Assy. — front door upper	200	22800/1
Hinge Assy. — hood	160	16800/1
Hinge — hood — less springs	160	16796/7
Hinge Assy. — luggage compartment door	400	42700/1
Hinge Assy. — rear door upper	200	26800/1
Hinge Assy. — rear seat centre armrest	600	67236/7
Hinge Assy. — spare wheel compartment door	400	47291
Hinge Assy. — tailgate	400	43000/1
Hinge Assy. — tailgate lower R.H.	400	43056
Hinge Assy. — tailgate upper on gate	400	43090
Hinge Assy. — upper on body	400	43086
Holder — ash tray	200	27470
Hood Assy.	160	16612
Hood Scoop Kit	190A	16A633
Hook Assy. — hood auxiliary catch	160	16892
Hook Assy. — jack	170	17A003
Hook — coat	Soft Trim	29024
Horn	190A	13800
Horn & Bracket Assy.	130	13801/2
Horn Assy. — air	90	9524
Hose	180	18666
Hose and Connector Assy. — rear wheel brake	20	2A448
Hose Assy. — air conditioner compressor to condensor	190	19972
Hose Assy. — condenser to dehydrator	190	19C939
Hose Assy. — dehydrator to evaporator	190	19939
Hose assy. — evaporator to compressor	190	19837
Hose Assy. — front wheel brake	20	2078/9
Hose Assy. — power steering pressure line to valve	30	3494
Hose Assy. — power steering return line	30	3A713
Hose — crank case vent tube	60	6A664
Hose — fuel tank filler	90	9047
Hose — fuel tank vent connect	90	9170
Hose — fuel tube (refer also 9324)	90	9C323
Hose — fuel tube connector	90	9324
Hose — fuel tube connector (refer 9324)	90	9288
Hose — hot water	180	18472
Hose — power steering return line	30	3A005
Hose — radiator upper	80	8260
Hose — radiator lower	80	8286
Hose — sun roof	500	502C52/3
Hose — vacuum brake	20	2A047
Hose — water heater manifold	90	9C425
Hose — water spacer	90	9C589 9D589
Hose — windshield washer	170	17A605
Hose — windshield washer bulk	170	17543
Housing & Bushing — drive end	110	11130
H cont.		
Housing & Carrier Assy.	40	4010
Housing and Plug Assy. — choke	90	9849
Housing Assy. — body side lamp	150	15A210
Housing Assy. — choke	90	9A575
Housing Assy. — control selector	70B	7A306
Housing Assy. — convertor	70B	7976
Housing Assy. — differential	40	4204
Housing Assy. — distributor terminal	120	12106
Housing Assy. — front suspension on body	30	3A438/9
Housing Assy. — fuel & temperature instrument cluster	100	10838
Housing Assy. — headlamp	130	13099 13101
Housing Assy. — parking brake control mounting	20	2848
Housing Assy. — instrument cluster	100	10838
Housing Assy. — steering gear	30	3548
Housing Assy. — volts & oil instrument cluster	100	10E838
Housing Assy. — wiper motor gear	170	17A431
Housing — air valve spring	90	9H557
Housing — flywheel	60	6392
Housing Lever Assy. — control selector	70B	7C453
Housing — secondary diaphragm	90	9A566
Housing — switch window regulator	140	14527/8
Housing — water pump	80	8505
Hub & Bearing Assy. — clutch release	75	7548
Hub & Disc Assy. — front wheel	10	1102
Hub & Drum Assy. — front wheel	10	1102
Hub — convertor impeller	70B	7915
Hub — convertor turbine	70B	7926
Hub — differential gear clutch	40	4946
Hub — front clutch	70B	7B067
Hub — output shaft	70B	7D164
Hub — water pump pulley	80	8553
I		
Idler — park brake rear cable	20	2A808
Idle tube	90	9542
Impeller — water pump	80	8512
Indicator Assy. — oil level	70B	7A020
Insert — control selector position	70B	7A216
Insert — oil filter mounting bolt	60	6890
Insert — rear spring	50	5586
Insert — rubber bumper guard	180	18414
Insert — synchroniser clutch hub	70A	7A044
Insert — thermostat choke control intake	90	9A714
Insulation — cowl panel lower	000	01699
Insulation cowl panel upper	000	020B43
Insulator Assy. — engine front support	60	6038
Insulator Assy. — engine rear support	60	6068
Indicator Assy. — oil level	60	6750
Insulator — circuit breaker	120	12289
Insulator — diode plate	000	10A383
Insulator — disc brakes	20	2B299
Insulator — front spring upper	50	5415
Insulator — gear shift	70A	7341
Insulator — gearshift anti rattle	70A	7246
Insulator — gear shift arm	70B	7341
Insulator — gear shift relay support	70B	7K094
Insulator — horn blowing ring inner contact plate	130	13A891
Insulator — instrument cluster	100	10C914
Insulator — muffler outlet pipe	50	5281
Insulator — pole shoe	110	11181
Insulator — power steering hose retainer	30	3A609
Insulator — rear spring centre	50	5732

Index

PART NAME	SECT.	BASIC NUMBER
cont.		
ısulator — shock absorber lower	180	18A018
ısulator — spring	110	11116
ısulator — stabilizer bar	50	5493
ısulator — stabilizer bar to frame	50	5484
ısulator — stabilizer bar to lower ıspension arm link bolt	50	55490
ısulator — switch	110	11068
ısulator — terminal	100	10329
ısulator — thermostat choke control	90	9865
ıdicator — transmission control selector	70B	7A110
J		
ack Assy.	170	17080
et Assy. — windshield washer	170	17666
et — main metering	90	9533
et — power by-pass	90	9594
et — power by-pass	90	9A516
ewel — instrument cluster warning lamp	100	10A936
oint Assy. — front suspension lower arm all	30	3395
K		
ey — door ignition lock — blank	200	22053
ey — door vent window frame handle ocking	200	22920
ey — glove and luggage compartment oor cylinder lock blank	400	43562
ey — valve spring retainer	60	6518
it — bearing connecting rod	60	18330
it — bonnet ornament	160	16607
it — brake cylinder repair (refer 2128)	20	2221
it — brake lining front and rear (refer 001	20	2096/7
it — camshaft bearing	60	6A251
it — clutch pressure plate (balanced)	75	7A563
it — clutch slave cylinder repair	75	7560
it — compressor crankshaft seal	190	19655
it — compressor gasket	190	19B684
it — contact point	110	11134
it — crankshaft bearing	60	18347
it — cylinder head repair	60	6A049
it — disc brake caliper hydraulic repair	20	2A221
it — draglink adjusting sleeve	30	3310
it — engine gasket — upper (also refer 079)	60	6014
it — engine gasket — upper (refer also 014	60	6079
it — fender — ornament (also refer ccessories section)	160	16A164
it — front brake disc pad assy.	20	2001
it — front brake shoe and lining	20	2001
it — front suspension upper arm ball oint	30	3049
it — front suspension lower arm strut — ushing	30	3A187
it — front suspension upper shaft	30	3047
it — gaskets	70B	7153
it — gasket transmission	70A	7153
it — hardware moulding retaining	200	29300
it — headlamp dimmer switch nstallation	130	13A024
it — locking differential	40	4880
it — paint touch-up (exterior)	190B	19K503
it — piston set	60	6A102

PART NAME	SECT.	BASIC NUMBER
K cont.		
Kit — pulley & Spacer	100	10344
Kit — rear band piston & stop	70B	7E216
Kit — rear brake lining	20	2007
Kit — rear brake shoe and lining	20	2001
Kit — rear brake shoe and lining	20	2200
Kit — rear brake shoe and lining bonded (refer 2001)	20	2200
Kit — rear clutch plate	70B	7B550
Kit — rear spring shackle — front	50	5630
Kit — rear spring shackle — rear	50	5631
Kit — rectifier	100	10340
Kit — repair	90	9349
Kit — repair major	90	9590
Kit — repair servo unit (refer comp. 2005)	20	2309
Kit — retainer and seal rear wheel bearing (refer also 1177 & 1180)	10	1A225
Kit — rotor parts set	100	10A333
Kit — seals, integral steering gear	30	3C538
Kit — shaft and seat rear axle differential pinion	40	4211
Kit — shim differential clutch	40	4A324
Kit — shock absorber — front	180	18124
Kit — shock absorber rear	180	18125
Kit — sliding sunroof	500	502A02
Kit — small parts repair	70A	7A331/ 7B331
Kit — spark plug wires	120	12259
Kit — stabilizer end repair	50	5A486
Kit — steering idler arm and bushing	30	3352
Kit — tune up	90	9A586
Kit — universal joint (refer to drive shaft chart for code applic.)	46	4635
Kit — washer reverse clutch thrust	70B	7D091
Kit — water pump repair	80	8591
Kit — wheel brake cylinder repair	20	2128/2221
Kit — window regulator gear set	200	234A24
Knob & Element Assy. — cigar lighter	150	15052
Knob — air regulator control	180	18A567
Knob Assy. — gear shift lever	70B	7213
Knob Assy. — radio control	180	18817
Knob Assy. — trans. gear shift lever		7213
Knob — door lock control rod	200	21850
Knob — door window regulator handle	200	23352
Knob — heater regulator control	180	18567
Knob — lever arm rear seat latch	600	61379
L		
Lamp Assy.	150	15200
Lamp Assy. — body side	150	15A201
Lamp Assy. — glove compartment	140	14413
Lamp Assy. — head less wiring	130	13008
Lamp Assy. — head less wiring (refer 13008)	130	13035
Lamp Assy. — interior rear	130	13776
Lamp Assy. — luggage compartment	130	13A756
Lamp Assy. — rear	130	13404/5
Lamp — kits	190A	18207
Latch Assy. — front door	200	21812/3
Latch Assy. — spare wheel compartment release	400	472A54
Latch Assy. — tailgate	400	43187
Latch Assy. — tailgate lower	400	431D88
Latch — hood external	160	16A703
Latch — rear seat back	600	605A14
Leaf — rear spring	50	5564
Leaf — rear spring	50	5565
Lens — rear lamp (refer 13450/1)	130	13A497/8
Lens Assy. — body side lamp	150	15A215

Index

PART NAME	SECT.	BASIC NUMBER
L cont.		
Lens Assy. — inner	130	13A472/3
Lens Assy. — parking lamp	130	13208/9
Lens Assy. — parking lamp (refer 13208/9)	136	13202/3
Lens — fuel & temperature instrument cluster	100	10D885
Lens — instrument cluster	100	10A890/1
Lens — instrument cluster	100	10B885
Lens — interior dome lamp	130	13783
Lens — rear lamp (also rear 13A497)	130	13450/1
Lens — rear turn indicator lamp	130	13328/9
Lens — speedo dial	170	17256
Lens — volts & oil instrument cluster	100	10D886
Letter — boot (refer 29300 for attaching kit)	400	40282
Letter — hood front	160	16606
Lever	90	9583
Lever	110	11067
Lever — accelerator pump	90	9D591
Lever and Shift Assy. — throttle plate	90	9A592
Lever and Swivel Assy. — choke	90	9A514
Lever — air valve dampener	90	9H582
Lever Arm — rear seat back latch	600	62419
Lever Assy. — accelerator shaft to pedal	90	9A734
Lever Assy. — adaptor selector	70B	7E207
Lever Assy. — air regulator control	180	18574
Lever Assy. — control selector	70B	7210
Lever Assy. — control selector (refer 7210)	70B	7202
Lever Assy. — clutch release (refer also 7541)	75	7515
Lever Assy. — downshift control outer	70B	7A394
Lever Assy. — d/shift detent — inner	70B	7D261
Lever Assy. — engaging pinion	110	11533
Lever Assy. — fast idle adj. throttle drive	90	9538
Lever Assy. — fast idle pick up	90	9A535
Lever Assy. — gear shift	70A	7210
Lever Assy. — gear shift (refer 7210)	70A	7202
Lever Assy. — manual control valve detent	70B	7A115
Lever Assy. — parking brake equalizer	20	2A606
Lever Assy. — parking brake operating	20	2A637/8
Lever Assy. — parking pawl toggle operating	70B	7A117
Lever Assy. — temperature reg. control	180	18544
Lever Assy. — throttle	90	9A581
Lever — brake shoe auto. adjusting	20	2A176/7
Lever — choke — control	90	9D541
Lever — choke control diaphragm	90	9J553
Lever — choke shaft	90	9551
Lever — choke thermostat	90	9A754
Lever — clutch release	75	7541
Lever — dechoke over ride	90	9J598
Lever — door lock operating	200	21970
Lever — fast idle cam	90	9F577
Lever — first & second gear shift	70A	7315
Lever — front band servo actuating	70B	7330
Lever — front door handle release	200	22422
Lever — gear shift	70A	7C312
Lever — gear shift	70A	7285/90
Lever — gear shift (refer 7285)	70A	7290
Lever — gear shift (refer 7210)	70A	7C305
Lever — gearshift lever mounting — lower	70A	7210
Lever — manual control	70B	7A257
Lever — mech. vent valve adjust	90	9H585
Lever — neutral switch operating	70B	7B097
Lever — parking brake toggle	70B	7A121
Lever — parking pawl torsion spring	70B	7B470
Lever Pump — floating	90	9A581
Lever — rear brand servo actuating	70B	7A169
Lever — thermostat shaft	90	9597
L cont.		
Lever — throttle control lever	70B	77283
Lever — throttle shaft auxiliary	90	9A537
Licence Plate — frame	190A	
Limiter idle adjusting needle	90	9J500
Link	90	9381
Link — accelerator pump	90	9529
Link — air valve — dampener	90	9H583
Link Assy. — door latch remote control	200	21914/5
Link Assy. — neutral switch	70B	7B247
Link Assy. — rear door lock control rod	200	26408/9
Link Assy. — tailgate lock release with anti rattle	400	431D54/5
Link Assy. — tailgate upper hinge release with anti rattle	400	431E60
Link — back door check arm roller	400	44138
Link — brake shoe connector	20	2042
Link — choke	90	9548
Link — parking brake	20	2A642
Link — parking pawl toggle	70B	77316
Link — parking pawl toggle operating lever	70B	7C495
Link — rear door lock remote control	200	26442/3
Link — tailgate upper latch to lower latch	400	431A24
Litter Bin	190A	19D504
Lock & rod assy. — door rear — interior	400	43100
Lock Assy. — hood	160	16700
Lock Assy. — luggage compartment door	400	43200
Lock Assy. — rear door	200	26412/3
Lock Assy. — rear door	400	43102
Lock Assy. — tailgate	400	43150/1
Lock — differential adjusting nut	40	4143
Lock Set — luggage compartment and glove compartment door	400	43507
Lockwasher — sun roof	500	502H04
Lubricator — differential	40	4159

M

Manifold Assy. — intake	90	9424
Manifold — exhaust	90	9430/1
Manifold — exhaust front (refer 9430/1)	90	9B430/1
Manifold — exhaust rear (refer 9430/1)	90	9C430/1
Mask Assy. — instrument cluster	100	10A882
Mat — front floor — column shift only	Soft Trim	13010
Mat — rear floor	Soft Trim	13054/5
Mat — rear floor rear	Trim	13182
Member Assy. — CTR drive	40	4A347
Member Assy. — front floor cross outer	100B	10692/3
Member Assy. — front side outer	100B	106A34/5
Member Assy. — floor side rear	100B	10124/5
Member Assy. — front suspension No. 2	100B	10010
Member Assy. — rear floor cross	100B	10746
Member Assy. — tonneau floor front cross	100B	12630
Member — front cross	100B	10922
Member — front fender apron to cowl side	160	16A034/5
Member — floor side inner	100B	10116/7
Member — floor side outer	100B	10120/1
Member — rear floor cross	100B	10736/7
Member — rear floor cross rear	100B	10780
Mirror and Mounting Assy. — exterior (refer accessories Section)	180	18402
Mirror Assy. — rear view exterior (refer 17682/3)	170	17A682

Index

PART NAME	SECT.	BASIC NUMBER
M cont.		
Mirror Assy. — rear view exterior (refer also 17B676 & 18402)	170	17682/3
Mirror Assy. — rear view exterior — remote control	170	17B676
Mirror Assy. — rear view interior	170	17700
Mirrors	190A	18402
Motor and Drive Assy. — door window regulator	200	23394/5
Motor and Lever Assy. — vacuum	180	18A318
Motor and Pump Assy. — windshield wiper	170	17B571
Motor and Wheel Assy. — blower	190	19805
Motor Assy. — air conditioner and heater control	180	18A318
Motor Assy. — heater blowing	180	18527
Motor Assy. — windshield wiper	170	17504/08
Motor — pump assy. — windscreen washer	170	17A511
Moulding Assy. — back window outside side	400	42478/9
Moulding Assy. — front door outside (refer 29300 for attaching kit)	200	20780/1
Moulding Assy. — front door outside belt	200	209A34/5
Moulding Assy. — lower back panel	400	424A44/5
Moulding Assy. — quarter panel outside (refer 29300 for attaching kit)	200	29066/7
Moulding Assy. — rear corner pillar outside rear	400	410A74/5
Moulding Assy. — rear door outside (refer 29300 for attaching kit)	200	254A16
Moulding Assy. — front fender side (refer 29300 for attaching kit)	160	16B068/9
Moulding Assy. — hood air scoop opening	160	16C612
Moulding Assy. — windshield outside side	000	031A36/7
Moulding — back belt (refer 29300 for attaching kit)	400	423A20/1
Moulding — back belt side (refer 29300 for attaching kit)	400	423A22/3
Moulding — back belt side rear (refer 29300 for attaching kit)	400	423B48/9
Moulding — back window garnish side	400	42416/7
Moulding — back window outside corner	400	42428/9
Moulding — back window outside lower	400	42404/5
Moulding — back window outside upper	400	42430/1
Moulding — body rocker panel (refer 29300 for attaching kit)	100B	10176/7
Moulding — centre body pillar outside upper (refer 29300 for attaching Kit)	200	24458/9
Moulding — console panel upper	000	045A28
Moulding — door outside belt	200	20934/5
Moudling — floor side member rear end (refer 29300 for attaching kit)	100B	10178/9
Moulding — front body pillar drip	000	026A20/1
Moulding — front door outside front	200	20492/3
Moulding — front door outside front capping	200	204A92/3
Moulding — front door outside rear	200	21140/1
Moulding — floor extension on wear strip	600	616A56
Moulding — front fender air scoop	160	16A108/9
Moulding — front fender — front (refer 29300 for attaching kit)	160	16164/5
Moulding — front fender side — front	160	16A003
Moulding — front fender wheel opening	160	16038/9
Moulding — hood front (refer 29300 for attaching kit)	160	16856
Moulding — luggage compartment door (refer 29300 for attaching kit)	400	42512
Moulding Kit — body side — protection	190A	19600
Moulding Kit — door edge guard	190A	54 20910
Moulding Kit — door edge guard (refer accessories section)	200	20910
Mounting Plate — power window	140	14523/4
Moulding — quarter panel fuel filler opening	200	28649
Moulding — quarter panel lower rear extension (refer 29300 for attaching kit)	200	29368/9
Moulding — quarter wheel opening (refer 29300 for attaching kit)	200	29164/5
Moulding — quarter window outside	200	29796
Moulding — quarter window outside belt	200	29034/5
Moulding — quarter window outside front	200	290A66/7
Moulding — quarter window outside upper	200	290A60/1
Moulding — rear door outside — belt (refer 29300 for attaching kit)	200	255A54/5
Moulding — rear door outside rear capping	200	255A42/3
Moulding — rear door outside top	200	25542/3
Moulding — rear door outside top front	200	254A12/3
Moulding — rear door outside top rear	200	25322/3
Moulding — roof drip rear	500	51704
Moulding — roof drip side	500	51726/7
Moulding — roof drip side	500	51700/1
Moulding — roof drip side finish — rear	500	51728/9
Moulding — roof drip side rear	500	51720/1
Moulding — tailgate outside belt	400	403A70
Moulding — tailgate outside lower (refer 29300 for attaching kit)	400	423A46
Moulding — windshield header inside	Soft Trim	03542
Moulding — windshield outside belt	000	03148/9
Moulding — windshield outside top	000	03144
Moulding — windshield outside top corner	000	03134/5
Mudflap Kit	190A	16268
Muffler Assy.	50	5230/2
Muffler Assy. — front and rear (refer 5230)	50	5K254
N		
Name — plate luggage compartment door (refer 29300 for attaching kit)	400	42528
Needle — idle thrust	90	9541
Nipple — hose heater	180	18599
Nozzle Assy. — windshild defroster	180	18A490
Nozzle — pump	90	9B538
Nut —brake adjusting screw — L.H.	20	2A104
Nut — brake adjusting screw — right hand (refer also 2A104 L.H.)	20	2047
Nut — brake pipe to connector	20	22270
Nut — connecting rod	60	6212
Nut — headlamp adjusting	130	13021
Nut or Shim — differential bearing adjusting	40	4067
Nut — pivot bolt	110	11A531
Nut — spare wheel mounting — wing	60	1457
Nut — spring sun roof	500	502H06
Nut — steering gear worm thrust bearing lock	30	3707
Nut — top control switch mounting	150	15B663
Nut — valve rocker arm stud	60	6A529
Nut — wheel bolt	10	1012
Nut — whel bolt (refer 1012)	10	1A012

Index

PART NAME	SECT.	BASIC NUMBER
O		
Oil Cup	120	10141
Oil Cup — (refer section 120)	100	10141
Oil Seal	90	9A393
Oil Seal — clutch piston — outer reverse/forward	70B	7A548
Oil Seal — extension housing	70A	7052
Oil Seal — manual control lever	70B	7B498
Oil Seal — output shaft	70A	7A011
Oil Seal — output shaft	70B	7A011
Oil Seal — rear band servo piston	70B	7423
'O' Ring — driving pinion bearing retainer	40	4669
'O' Ring — front band servo piston (refer also 7423)	70B	7A294
'O' Ring — front clutch piston oil inner (refer also 7E212)	70B	7C328
'O' Ring — fuel valve seat	90	9609
'O' Ring — throttle control shaft oil	70B	77265
Ornament Assy. — luggage compartment door	400	43504
Ornament — door trim	200	20802
Ornament Kit	190A	16A164
P		
Pad & Insert — accelerator pedal	90	9735
Pad and Retainer Assy. — instrument panel	Soft Trim	04282
Pad — anti rattle	600	616A47
Pad Assy. — armrest console	000	045A21
Pad Assy. — dash sound absorbers	000	01670
Pad — brake or clutch pedal plate	20	2457
Pad — console	000	045A14
Pad — door outside handle	200	22428
Pad — door trim panel — anti rattle	200	27466
Pad — front floor	100B	13015
Pad — front seat cushion	600	63222
Pad — front seat cushion upper (refer 63222)	600	632A22
Pad — glove compartment door trim	000	060A68
Pad — header — sun roof	500	502B10
Pad — header sun roof	500	502B08/9
Pad — heater blower motor opening	180	18B475
Pad — luggage compartment door lock cylinder sleeve	400	43625
Pad — rack adjusting	30	3A657
Pad — radiator support bracket	80	8124/5
Pad — rear floor	100B	13056
Pad — rear floor front	100B	130A56
Pad — rear lamp mounting (also refer 13461)	130	13420
Pad — regulator handle back window	400	44011
Pad — transceiver — taxi	Soft Trim	042B85
Pad Wiper — armature thrust	170	17A486
Paint — touch-up — interior	190B	19506
Pan Assy. — centre floor	100B	11155
Pan Assy. — oil	60	6675
Pan Assy. — rear floor	100B	11215
Pan Assy. — transmission oil	70B	7A194
Pan — front floor	100B	11140
Pan — rear floor rear	100B	11218
Pan — rear floor side inner	100B	112A22/3
Panel Assy. — bulkhead lower	400	40323
Panel Assy. — cowl top	000	02010
Panel assy. — dash	600	01610
Panel Assy. — front door	Soft Trim	23942/3
P cont.		
Panel Assy. — front seat back	Soft Trim	60762
Panel Assy. — instrument	000	04320
Panel Assy. — instrument panel end	Soft Trim	04480
Panel Assy. — package tray	400	46506
Panel Assy. — package tray	Soft Trim	466A56
Panel Assy. — package tray side	Soft Trim	466B56/7
Panel Assy. — quarter	Soft Trim	31136/7
Panel Assy. — quarter	Soft Trim	31012/3
Panel Assy. — quarter lower	Soft Trim	310A64/5
Panel Assy. — quarter rear — refer also 31112/3	Soft Trim	31148/9
Panel Assy. — quarter rear — refer also 31148/9	Soft Trim	31112/3
Panel Assy. — quarter window regulator	200	27870/1
Panel Assy. — rear door	Soft Trim	27406/7
Panel Assy. — rear seat back floor	600	60508
Panel Assy. — spare wheel compartment rear	400	472A21/2
Panel Assy. — tailgate inner	400	40706
Panel Assy. — upper back and package tray	400	40310
Panel Assy. — windshield header outer	000	03408
Panel — armrest console	000	045A07
Panel — back window frame side	400	422A02/3
Panel — body side inner front	200	278A44/5
Panel — body side lower	200	27848/9
Panel — body side lower ext.	200	278A52/3
Panel — body side lower inner access	200	278A62/3
Panel — body side upper	200	27850/1
Panel — bulkhead upper	400	40328
Panel — cover — sun roof	500	502L82
Panel Cowl	Soft Trim	02344/5
Panel — cup plastic retaining	500	502L31
Panel — front door outside	200	20204/5
Panel Front — vent box	200	27908
Panel — front valance	170	17626
Panel — lower back	400	40324
Panel — package tray	Soft Trim	46668
Panel — quarter	200	27846/7
Panel — quarter inside to floor pan	200	27858/9
Panel — quarter trim upper	Soft Trim	310A12/3
Panel — quarter wheel house inner	200	27886/7
Panel — quarter wheel house outer	200	27894/5
Panel — rear corner outer	400	41230/1
Panel — rear door outside	200	24704/5
Panel — rear end console	000	04569
Panel — rear floor trim	100B	11580
Panel — rear side tonneau	100B	11228
Panel — roof	500	50202
Panel — spare wheel compartment base	400	47207
Panel — spare wheel compartment side	400	47204/5
Panel — still rear floor cross	100B	11318
Panel — tailgate inside cover	400	407A13
Panel — tailgate outer	400	40710
Panel — vent box	200	27906
Partial Ring Set	60	6148
Pawl Assy. — control selector locking	70B	7C442
Pawl — assy. parking	70B	7A441
Pawl — front seat back latch	600	62606
Pedal Assy. — brake	20	2455
Pedal Assy. — clutch	75	7519

Index

PART NAME	SECT.	BASIC NUMBER
P cont.		
Petrol Caps	190A	9030
Pillar and Cowl Side Assy. — front body	000	02042/3
Pillar Assy. — centre body	200	24300/1
Pillar Assy. — front body lower	000	02500
Pillar Assy. — front body upper	000	02504
Pillar Assy. — quarter lock	200	28160/1
Pillar Assy. — rear corner inner — rear	400	412A02/3
Pillar Assy. — rear corner outer	400	412A04/5
Pillar — front body upper inner corner	000	02622/3
Pillar — front body upper outer	000	02516/7
Pillar — quarter wheel house roof outer	200	278A38/9
Pillar — quarter wheel house to roof inner	200	278A36/7
Pillar — rear corner inner front	400	412A32/3
Pillar — rear corner inner front upper	400	41210/1
Pillar — rear corner outer	400	41038/9
Pin	120	12A175
Pin — accelerator pedal	90	9873
Pin — air valve dampener	90	9H584
Pin — band actuating lever shaft	70B	77356
Pin — brake and clutch master cylinder link	20	2A041
Pin — brake shoe hold down	20	2069
Pin — door hinge	200	22840
Pin — fast idle adjust. lever	90	9579
Pin — front band servo piston guide (refer also 7A164)	70B	7A163
Pin — gear shift interlock rod	70A	7C316
Pin — hinge door console door	000	045A65
Pin — parking brake lever	20	2107
Pin — parking brake toggle link	70B	7A244
Pin — parking lever support	70B	7D165
Pin — parking pawl toggle lever	70B	7A244
Pin — parking pawl toggle lever	70B	7A295
Pin — park pawl toggle lever support	70B	7A119
Pin — parking pawl toggle link	70B	77318
Pin — parking pawl toggle link	70B	7E415
Pin — parking pawl support	70B	77312
Pin — piston	60	6135
Pin — rocker arm	90	9378
Pin — shifter interlock	70A	7235
Pin — shift lever pivot	70A	7D439
Pin — throttle pressure booster retainer	70B	7D375
Pin — windshield wiper blade to arm	170	17B527
Pinion — rear axle differential	40	4215
Pipe Assy. — fuel tank filler	90	9034
Pipe Assy. — muffler inlet	50	5346
Pipe — muffler outlet	50	5255/6
Pipe — muffler outlet extension	50	5A255
Piston and Ball Assy. — rear clutch	70B	7D157
Piston & Pin Assy.	60	6108
Piston & Pin Assy. — front servo band (refer also 7A163 & 7A260)	70B	7A164
Piston and Rod Assy. — air valve dampener	90	9H578
Piston and Seal Assy. — reverse band servo	70B	7D189
Piston Assy. — choke	90	9840
Piston Assy. — clutch	70B	7A262
Piston assy. — pump	90	9B544
Piston Assy. — power valve	90	9G553
Piston Assy. — vacuum power	90	9904
Piston — brake/clutch master cylinder	20	2172
Piston — clutch slave cylinder	75	7A514
Piston — front band servo	70B	7A260
Piston — front band servo release	70B	7366
Piston — front brake cylinder	20	2196
Piston Rack and Seal Assy.	30	3A545
Piston — rear brake cylinder	20	2197
Piston — rear brand	70B	7E216
Piston — rear band servo	70B	7A266
Piston — rear band servo accum.	70B	7E216
Piston — servo	70B	7D022

PART NAME	SECT.	BASIC NUMBER
P cont.		
Pivot Assy. — seat back front seat	600	618C04
Pivot Assy. — windshield wiper	170	17566
Pivot — armrest hinge console	000	045A15
Pivot — clutch release lever	75	7522
Planet Assy. — reverse	70B	7D006
Plate and Bracket Assy. — check arm roller mounting	400	44110
Plate and Cover Assy. — clutch pressure (refer also 7A563)	75	7563
Plate & Filter Assy. — fuel & temperature back	100	10D882
Plate & Filter Assy. — instrument cluster	100	10B882
Plate & Filter Assy. — volt & oil back	100	10D883
Plate and Lever Assy. — front door outside handle	200	224A32/3
Plate and Stud Back-Up	90	9841
Plate — air distribution	90	9F553
Plate — anchor	20	2B292/3
Plate Assy. — back door check arm mounting	400	441A52/3
Plate Assy. — breaker	120	12151
Plate Assy. — brush end	110	11049
Plate Assy. — clutch internal spline front	70B	7B164
Plate Assy. — cylinder front (refer 6019)	60	6A070
Plate Assy. — differential clutch	40	4945
Plate Assy. — differential clutch composite	40	4A325
Plate Assy. — evaporator front housing cover	190	19A586
Plate Assy. — front brake backing	20	2012/3
Plate Assy. — heater housing blower & plenum	180	18A485
Pad Assy. — hood to cowl (refer 02805)	160	16A942
Plate Assy. — luggage compartment door lock striker	400	432A06
Plate Assy. — name consul panel	000	044E96
Plate Assy. — name consul panel	000	044E96
Plate Assy. — oil pan guard (also refer body section 10010)	60	6A680
Plate assy. — radiator grille name	80	8A320
Plate — radiator grille name attaching	80	8262
Plate Assy. — rear seat back support anchor	600	616A08
Plate Assy. — rear wheel brake backing	20	2211/12
Plate — back door hinge anchor	400	403A96
Plate — back door lock striker lower	400	433A36
Plate — back door lock striker upper	400	43118
Plate — bearing retainer	100	10A335
Plate — blower inlet	190	19A821
Plate — camshaft thrust	60	6269
Plate — c/shaft & reverse idler shaft lock	70A	7155
Plate — choke	90	9545
Plate — clutch external splines — reverse clutch driven	70B	7D442
Plate — clutch pressure	70B	7B066
Plate — clutch spring preload differential	40	4A326
Plate — clutch spring preload differential (refer 4A326)	40	4419
Plate — console insert	000	044F44
Plate Control Lower Valve Body End	70B	77014
Plate — control upper valve body front	70B	7A396
Plate — diaphragm front	20	2395
Plate — differential gear clutch	40	4947
Plate — door lock striker anchor	200	22024
Plate — door vent window div. bar scuff	200	222A94
Plate — engine rear cover	70A	7007
Plate — engine rear cover	70B	7007
Plate — engine rear cover (refer 7007)	70A	7B007
Plate — engine rear cover (refer 7007)	60	6A373
Plate — engine rear cover (refer 7007)	70B	7B007
Plate — engine rear support	60	6070
Plate — fast idle cam	90	9838

Index

PART NAME	SECT.	BASIC NUMBER
P cont.		
Plate — flywheel reinforcement	60	6A366
Plate — front door scuff	100B	13208/9
Plate — front fender name	160	16098
Plate — front floor mat	100B	13190
Plate — front stabilizer bar insulator retainer	50	5A486
Plate — gear shift lever opening	70A	7B233
Plate — gear shift lever opening	70B	7B233
Plate — guide valve rocker arm	60	6A564
Plate — hinge anchor back door lower	400	403A97
Plate — hood latch bezel anchor external	160	16A709
Plate — horn switch brush	130	13A823
Plate — licence lamp socket	130	13A554
Plate — luggage compartment door lock striker	400	43252
Plate — main control cover & lower valve body separator	70B	7734
Plate — main control lower valve body cover side	70B	7729
Plate — main control separating	70B	7A008
Plate — rear clutch pressure	70B	7B437
Plate — rear door scuff	100B	13228
Plate — rear seat belt to floor attaching	600	610A74
Plate — rear spring mounting insulator retaining	50	5A736
Plate — rear spring 'U' Bolt	50	5798/9
Plate Reinforcement — front stabilizer bar mounting bracket	50	5A483
Plate — road lamp reinforcement	150	15K230
Plate — steering column lock deflector	30	3A675
Plate — steering column opening cover	000	01698/9
Plate — synchronizer shifter plate	70A	7116
Plate — tailgate lock mounting	400	431F78
Plate — tailgate lock striker anchor	400	43139
Plate — throttle	90	9585
Plate — throttle pressure booster stop	70B	7E336
Plate — window regulator handle	200	23370
Plate Assy. — stabilizer bar link mounting	50	5A781
Plate — water by-pass	80	8K517
Plenum Chamber Assy.	180	18471
Plug	90	9562
Plug — camshaft rear bearing	60	6266
Plug — cap oil pump spring	60	6666
Plug — cylinder block (also refer 6049)	60	6026
Plug — distributor diaphragm	120	12A002
Plug — drive	90	9517
Plug — lead ball	90	9A512
Plug — oil filler	40	4A036
Plug — oil pan drain	60	6730
Plug — oil pump relief valve (also refer 6666)	60	6A616
Plug — rocker arm pin	90	9A360
Plug — steering gear oil filler	30	3538
Plug — valve rocker arm shaft	60	6572
Plunger — control selector lever	70B	7361
Plunger — main valve detent	70B	77607
Plunger — oil pump relief valve	60	6674
Point Set	120	12171
Pointer — timing	60	6023
Power — fast idle cam	90	9537
Post — contact	110	11176
Post — retaining cable — sun roof	500	502B40
Pouch — seat belt	Soft Trim	602A09
Printed Circuit — instrument cluster	100	10K843
Protector — windscreen	190A	19000
Pull Tab — seat belt	Soft Trim	602A07
Pulley Assy. — crankshaft (also refer 6316)	60	6312
Pulley Assy. — crankshaft — outer	60	6A312
Pulley Assy. — fan belt idler	80	8678
P cont.		
Pulley Assy. — handbrake cable	20	2804
Pulley — belt	100	10344
Pulley — power steering pump	30	3A733
Pulley — water pump	80	8509
Pump Assy. — fuel	90	9350
Pump Assy. — oil front	70B	7A103
Pump — lever	90	9538
Pump Assy. — oil (also refer 6621)	60	6600
Pump Assy. — oil less screen & cover (also refer 6600)	60	6621
Pump Assy. — power steering	30	3A674
Pump Assy. — water less pulley	80	8501
Push Rod	20	2377
R		
Race — convertor stator clutch — inner	70B	7946
Race — convertor stator clutch — outer	70B	7947
Race — front clutch sun gear thrust — front	70B	7D236
Race — front clutch sun gear thrust — rear	70B	77549
Race — output shaft bearing	70B	7A387
Race — over running clutch — lever	70B	7D171
Race — over running clutch — outer	70B	7B456
Rack and Worm Assy. — steering gear	30	3A710
Radiator Assy.	80	8005
Radio & Stereo Tape Players & Components	190A	18805
Rail Assy. — back window header	400	41302
Rail Assy. — roof side inner front	500	513A38/9
Rail — gearshift	70A	7240/1
Rail — quarter belt	200	28714/5
Rail — retain head lining sun roof	500	502L19
Rail — roof side inner rear	500	513A20/1
Rail — roof side outer front	500	513A12/3
Rail — roof side outer rear	500	513A16/7
Rally Stripe Kit	190A	19A600
Reaction Disc (refer Section 20A)	20	2414
Rear Axle Assemblies	40	4005
Rear Boot Lid Release	190A	54 43200
Rebuilt engine assy.	60	6007/6009
Receptacle — ash console panel rear — floor shift only	Soft Trim	048A42
Receptacle Assy. — ash instrument panel	000	04810
Receptacle Assy. & Retainer — ash	Soft Trim	62866
Reclining Mechanism Assy. — front seat	600	60340/1
Rectifier Assy.	100	10376
Register Assy.	190	19893
Register — heater	180	18C306
Regulator Assy. — alternator	110	10316
Regulator Assy. — back window	400	44000
Regulator Assy. — front door window	200	23200/1
Regulator Assy. — oil pressure	70B	7A139
Regulator Assy. — rear door window (refer also 27008/9)	200	27000/1
Regulator — front door window less motor	200	23208
Regulator — quarter window	200	30306
Regulator — quarter window less motor & drive	200	30380/1
Regulator — rear door window less motor (refer also 27000/1)	200	27008/9
Regulator — voltage instrument cluster	110	10804
Reinforcement and Ext. Assy. — front suspension No. 2 — crossmember	100B	101A04/5
Reinforcement Assy. — body side upper	200	278A86

Index

PART NAME	SECT.	BASIC NUMBER
R cont.		
Reinforcement — front bumper impact	170	17A792
Reinforcement — front seat belt anchor to side member	600	61216
Reinforcement — front suspension No. 2 — crossmember outer	100B	10542/3
Reinforcement — front suspension No. 2 — crossmember outer rear	100B	10104/5
Reinforcement — luggage compartment door opening	400	451A04/5
Reinforcement — luggage compartment door opening side	400	44804/5
Reinforcement — quarter panel lock side lower	200	28216/7
Reinforcement Assy. — bumperette side outer	170	17C764/5
Reinforcement Assy. — floor pan centre	100B	113A30
Reinforcement Assy. — floor pan seat track	100B	11246/7
Reinforcement Assy. — rear bumperette Pillar to quarter	170	17C758/9
Reinforcement Assy. — rear bumperette side inner	170	17C754/5
Reinforcement Assy. — rear floor side member — rear spring mounting	100B	10326
Reinforcement Assy. — roof panel	500	50244
Reinforcement Assy. — seat belt anchor to floor plan	600	60100
Reinforcement — body front pillar upper	000	02524/5
Reinforcement — body side upper rear	200	28050/1
Reinforcement — floor side member to front side member front	100B	10262/3
Reinforcement — floor side member to front side member rear	100B	10156/7
Reinforcement — floor side rear member	100B	10250/1
Reinforcement — quarter panel to roof side rail	200	284A80/1
Reinforcement — quarter trim panel	200	31218
Reinforcement — rail assy. — sun roof	500	502K74
Reinforcement — rear bumper mounting bracket	170	17B862/3
Reinforcement — rear bumper impact	170	17912
Reinforcement — rear floor pan	100B	111A64
Reinforcement — rear floor side member to floor side	100B	10158/9
Reinforcement — rear lamp opening	200	27970/1
Reinforcement — rear seat belt anchor to quarter belt	600	613B84
Reinforcement — rear stabilizer bar insulator	50	5A783
Reinforcement — road lamp	150	15K230/1
Reinforcement — seat back support rail	600	60114
Reinforcement — upper instrument panel bezel	000	043A18
Relay Assy. — driving lamps	150	15A221
Relay Assy. — starter motor	110	11450
Relay Assy. — reverse lamp	150	15A220
Relay Assy. — window regulator safety	140	14677
Relay — clutch compressor	20	2A981
Repair Kit — booster assy.	20	2309
Repair Kit — brake and clutch master cylinder	20	2004
Repair Kit — sleeve disc brakes	20	2A094
Reservoir and Bracket Assy.	20	2063
Reservoir — windshield washer	170	17618
Resistor — heater switch to blower motor	180	18591
Retainer	200	254A46
Retainer — accelerator pump check valve	90	9575
Retainer — accelerator pump spring	90	9599
Retainer and Bearing Cup Assy. — driving pinion bearing	40	4614
Retainer and Division Bar — rear door glass run	200	263A58/9
R cont.		
Retainer and Filter — heater control lamp	180	18A651
Retainer — air valve spring housing	90	9H558
Retainer Assy. — air cleaner	90	9B672
Retainer Assy. — back belt side moulding	400	423A04
Retainer Assy. — door outside mounting	200	21094
Retainer Assy. — door window glass channel bracket	200	234A46
Retainer Assy. — front door glass run front	200	217A26/7
Retainer Assy. — front door glass run lockside	200	222A00/1
Retainer Assy. — front door vent window weatherstrip	200	21408/9
Retainer Assy. — front sidemember moulding front	100B	10198
Retainer Assy. — hood latch external	160	16A706/7
Retainer Assy. — hood front moulding	160	16A746
Retainer Assy. — instrument panel ash receptacle	000	04826
Retainer Assy. — moulding luggage compartment door	400	42533
Retainer Assy. — moulding tailgate outside at belt	400	40222
Retainer Assy. — quarter outside moulding	200	29120
Retainer Assy. — rear door glass run front	200	25796/7
Retainer Assy. — roof rail weatherstrip	500	51238/9
Retainer — axle shaft bearing outer	40	4020
Retainer — back belt side moulding	400	40248
Retainer — back door check arm link	400	40527
Retainer — back window glass upper side	400	42374/5
Retainer — back window outside upper moulding	400	42413
Retainer — belt moulding windshield	000	03407
Retainer — cam	120	12177
Retainer — cigar lighter	150	15056
Retainer — clutch piston spring	70B	7A527
Retainer — coat hook	200	29232
Retainer — control selector lever plunger	70B	7A347
Retainer — crankcase ventilator regulator valve	60	6A892
Retainer — diaphragm	20	2429
Retainer — differential side gear spring	40	4A022
Retainer — door lock anchor striker plate	200	22021
Retainer — door lock cylinder	200	22023
Retainer — door lock cylinder	400	43629
Retainer — door outside belt moulding	200	25446
Retainer — door outside moulding	200	20818
Retainer — door vent window division bar glass run	200	222A88/9
Retainer — door vent window division bar glass run	200	234A14/5
Retainer — driving pinion pilot bearing	40	4627
Retainer — float lever shaft	90	9599
Retainer — front bearing	100	10A355
Retainer — front door trim at belt	200	237A30/1
Retainer — front mat to seat track	100B	13190
Retainer — front suspension lower arm ball	30	3A027
Retainer — front wheel hub grease	10	1190
Retainer — gearshift lever boot	70A	7262
Retainer — gear shift tube	70A	7348
Retainer — glove box door cover	000	04272
Retainer — governor sec. valve spring	70B	7D218
Retainer — headlining support	500	52212
Retainer — hood insulator	160	16776
Retainer — input shaft bearing	70A	7050
Retainer — mat rear floor	Soft cTrim	13144/5
Retainer — moulding door outside belt	200	20908
Retainer — moulding front fender front	160	16086
Retainer — over running clutch spring	70B	7D191

Index

PART NAME	SECT.	BASIC NUMBER
R cont.		
Retainer Pad — radiator grille emblem	80	8231
Retainer — park pawl toggle lever pin	70B	77326
Retainer — parking brake cable	20	2A804
Retainer — parking brake lever pin	20	2106
Rod — parking brake equalizer	20	2628
Retainer — parking pawl toggle spring	70B	77323
Retainer — quarter panel moulding	200	29118
Retainer — quarter window front weatherstrip	200	29952/3
Retainer — quarter window guide roller	200	298A04
Retainer — radiator grille emblem	80	8194
Retainer — rear band servo piston spring	70B	7B264
Retainer — rear clutch plate	70B	7D483
Retainer — rear door trim to belt	200	274A60/1
Retainer — rear seat cushion front	600	63370
Retainer — rear spoiler	400	44218/9
Retainer — rear spring centre insulator	50	5736
Retainer — rear wheel bearing inner (also refer 1A225)	10	1180
Retainer — roof headlining head strip	500	50966
Retainer — roof headlining support rear	500	52180
Retainer — speedometer driven gear	170	17292
Retainer — steering column opening cover plate	000	016B72
Retainer — tailgate counter balance torsion bar	400	40732
Retainer — tailgate opening lower weatherstrip	400	402A06
Retainer — tailgate panel cover	400	407A10
Retainer — third and second coasting orifice valve spring	70B	7194
Retainer — throttle pressure booster stop plate	70B	7E396
Retainer — tonneau bow	200	28795
Retainer — valve spring	60	6514
Ring Assy. — headlamp	130	13118/9
Ring Assy. — wheel trim (refer 1130)	10	1210
Ring — drive stop	110	11222
Ring — forward clutch piston spring	70B	7D256
Ring — front clutch oil seal (refer 7C169)	70B	77542
Ring — front clutch oil seal — rear (refer 7C169)	70B	77543
Ring — front clutch piston spring pressure	70B	77563
Ring — front servo piston seal	70B	7C050
Ring — fuel tank sender retainer locking	90	9A307
Ring — governor housing seal	70B	7D011
Ring — headlamp bulb retainer	130	13015
Ring — jump	110	11A352
Ring Lock	110	11A394
Ring — oil pump intermediate tube — return spring shaft retainer	60	6629
Ring — retain high & forward clutches	70B	7A577
Ring — rear wheel bearing locking	10	1A225
Ring — rubber horn blowing	130	13A875
Ring Set — piston (perfect circle) — refer 6148	60	6149
Ring — snap	70B	7059
Ring — snap (refer 7064)	70A	7026
Ring — snap (refer also 7059 & 17285	70A	7064
Ring — synchronizer blocking	70A	7109
Rivet — distributor cap clamp	120	12145
Rod — accelerator pump link to throttle lever	90	9B542
Rod and Diaphragm Assy.	90	9398
Rod Assy. — accelerator bellcrank to carburettor	90	9772
Rod Assy. — accelerator shaft to bellcrank	90	9A702
Rod Assy. — clutch push	75	7A541
Rod Assy. — clutch slave cylinder push	75	7A507/ 7B507
R cont.		
Rod Assy. — connecting	60	6200
Rod Assy. — control shaft to transmission	70B	7A186
Rod Assy. — front seat latch tie	600	61802
Rod Assy. — front seat latch tie (refer 61802)	600	61726
Rod Assy. — parking lever actuating	70B	7A232
Rod Assy. — spare wheel compartment door latch release	400	472A42
Rod Assy. — steering pitman to idle arm	30	3304
Rod Assy. — valve push	60	6565
Rod — choke diaphragm control	90	9S567
Rod — choke kick	90	9A599
Rod — door lock control to cylinder	200	22134
Rod — door lock push button	200	21852/3
Rod — fast idle	90	9B530
Rod — fast idle cam	90	9D530
Rod — float bowl vent	90	9A515
Rod — front door latch actuating	200	22152
Rod — gear selector	70A	7328
Rod — gear selector	70A	7326
Rod — gear selector	70B	7326
Rod — gear shift relay to trans. connector	70B	7A095
Rod — parking brake linkage	70B	7A122
Rod — pump connector	90	9531
Rod — rear door lock push button	200	26460
Rod — reverse gear shift	70A	7B112
Rod — secondary throttle control	90	9C504
Rod — servo piston	70B	7D023
Rod — tailgate lock control	400	43884
Rod — throttle control valve	70B	7A380
Rod Transmission to Bellcrank Lever (refer 7A095)	70B	7A024
Rocker Panel Moulding Kit	190A	18243
Roller Assy. — control selector lock	70B	7D328
Roller — bearing	70B	7C458
Roller — check arm back door	400	43946
Roller — countershaft bearing	70A	7121
Roller — over running clutch	70B	7190
Roller — input shaft pilot bearing	70A	7120
Roller — input shaft pilot bearing	70A	7118
Roller — planetary clutch	70B	7C366
Roller — rear clutch sun gear front bearing	70B	77507
Roller — quarter window guide	200	29824
Roller — reverse idler gear thrust	70A	7145
Roof Rack	190A	18320
Roof Side Inner Front	500	513A30/1
Rope Rail Kit	190A	19010
Rotor	100	10355
Rotor & Shaft Assy. — oil pump drive	60	6608
Rotor Assy. — distributor	120	12200
Rotor — complete	100	10335
Rotary Link — windshield wiper	170	17533
Run and Bracket Assy. — door glass	200	223A72
Run Assy. — back window glass lower side	400	422A20/1
Run Assy. — back window glass top	400	422A36
Run Assy. — front door glass	200	21596
Run Assy. — rear door glass top	200	25766
Run — door vent window division bar glass	200	21660
Run — rear door glass rear	200	26614
S		
Safety Harness	190A	58 61204
Safety Plate — sun roof	500	502H05
Screen & cover assy. — oil pump	60	6622
Screen Assy.	90	9365

Index

PART NAME	SECT.	BASIC NUMBER
S cont.		
Screen Assy. — governor oil	70B	7E242
Screen Assy. — oil pan	70B	7A098
Screen — fuel filter	90	9F525
Screen — grille insect	190A	18690
Screen — pump strainer	90	9575
Screw	110	11415
Screw & Washer	120	12B179
Screw & Washer	120	12A179
Screw	90	9586
Screw — bearing adjusting	30	3821
Screw — brake adjusting L.H.	20	2A103
Screw — brake adjusting right hand	20	2041
Screw — fast idle adjust	90	9B538
Screw — front servo adjusting	70B	7A178
Screw — headlamp adjusting	130	13093
Screw — headlamp adjusting	130	13032
Screw — idle	90	9A541
Screw — planet support	70B	7A291
Screw — plate retaining	100	10A323
Screw — pole shoe	110	11A181
Screw — pump discharge nozzle	90	9577
Screw — pump discharge nozzle	90	9B529
Screw — rear band adjusting	70B	7A178
Screw — rear servo	70B	7D477
Screw — reverse band adjusting	70B	7C492
Screw — steering gear adjustment	30	3577
Screw — sun roof	500	502H01
Screw — sun roof	500	502H02
Screw — sun roof	500	502H03
Screw — sun roof	500	502H07
Screw — sun roof	500	502H08
Screw — sun roof	500	502H09
Screw — valve rocker arm adjusting	60	6549
Screw — wheel brake cylinder bleeder	20	2A125
Seal — accelerator shaft	90	9793
Seal — air horn	90	9C527
Seal — air vent inlet duct cowl top	000	018B24
Seal Assy. — control selector dial	70B	7D351
Seal Assy. — crankshaft oil	60	6700
Seal Assy. — crankshaft oil	60	6701
Seal Assy. — door belt	200	20564/5
Seal Assy. — front oil pump	70B	7A248
Seal Assy. — front suspension arm ball joint dust	30	3A105
Seal Assy. — input shaft oil	70A	7A283
Seal Assy. — quarter lock pillar	200	28182/3
Seal Assy. — rear axle drive pinion oil	40	4676
Seal Assy. — rear wheel bearing oil inner (also refer 1A225)	10	1177
Seal Assy. — shifter shaft oil	70A	7288
Seal Assy. — steering gear housing oil	30	3591
Seal Assy. — water pump	80	8564
Seal — back adjusting screw	30	3D528
Seal — back door hinge to outer panel	400	40840/1
Seal — back window regulator drive	400	422B12
Seal — base to block	120	12143
Seal — clutch master cylinder	20	2173
Seal — control selector housing	70B	7C370
Seal — cowl top panel to hood	000	02805
Seal — door drain	200	20700
Seal — engine Rear Cover Plate	60	6424
Seal — evaporator case cover	190	19B738
Seal — evaporator core	190	19A672
Seal — evaporator core tubes to case	190	19B552
Seal — fast idle rod	90	9B501
Seal — front clutch cylinder	70B	7D019
Seal — front clutch sun gear clutch	70B	7C169
Seal — front fender splash shield rear	160	16D562
Seal — front fender splash shield rear extension	160	16102
Seal — front fender to radiator support	160	16A572
Seal — heater hose to dash panel	180	18596

PART NAME	SECT.	BASIC NUMBER
S cont.		
Seal — master cylinder push rod	20	2005/A7
Seal — oil extension housing	70B	7052
Seal — oil pan	60	6722
Seal — oil pan	60	6723
Seal — oil pressure regulator valve spring	70B	7C062
Seal — piston cover steering housing	30	3805
Seal — pitman arm ball to stud dust	30	3A196
Seal — rear clutch piston inner (refer also 7C328)	70B	7E212
Seal — rear clutch piston outer	70B	7C051
Seal — rear housing bearing	110	11K013
Seal — rear lamp bezel	150	13A555
Seal — reverse band servo piston cover	70B	7D040
Seal — reverse clutch cylinder	70B	7D020
Seal — reverse clutch piston — inner	70B	7D404
Seal — sensor switch	70A	77868
Seal — servo piston large	70B	7D024
Seal — servo piston small	70B	7D025
Seal — steering column opening	30	3513
Seal — steering gear shaft oil	30	3738
Seal — valve stem	60	6571
Seal — window regulator switch	140	14A353
Seal and Bushing Assy. — front suspension upper arm spring	30	3388
Seat Assy. — front bench	Soft Trim	60004
Seat Assy. — front bucket	Soft Trim	60004/5
Seat Assy. — water pump impellor	86	8517
Seat — idle needle	90	9634
Seat — inlet connection steering housing	30	3D728
Seat — rear clutch piston spring	70B	77516
Seat — valve rocker arm fulcrum	60	6A528
Selector Assy. — transmission control	70B	7200
Sender and Outlet Tube Assy. — fuel tank	90	9275
Sender assy. — water temperature indicator	100	10884
Separator — ignition cable	120	12297
Servo Assy. — front	70B	7A094
Servo Assy. — rear	70B	7B172
Shackle Assy. — rear spring	50	5776
Shaft and Bearing Assy. — rear axle	40	4234/4725
Shaft and Bearing Assy. — rear axle L.H. (refer 4234)	40	4725
Shaft and Gear Assy. — output	70A	7A061
Shaft and Lever Assy. — manual control	70B	7A256
Shaft and Lever — choke housing	90	9A753
Shaft Assy.	120	12175
Shaft Assy. — accelerator	90	9725
Shaft Assy. — carburettor throttle operating	90	9919
Shaft Assy. — choke	90	9546
Shaft Assy. — front door vent window handle	200	229A10
Shaft Assy. — gear shift relay	70B	7A097
Shaft Assy. — output	70B	7060
Shaft Assy. — throttle	90	9581
Shaft — choke plate	90	9547
Shaft — clutch and brake pedal pivot	75	7506
Shaft — damper temperature control	190	19B469
Shaft — float lever	90	9558
Shaft — front servo actuating lever	70B	7A165
Shaft — front suspension upper arm inner	30	3056
Shaft — gearshift lever support	70A	7241
Shaft — input	70A	7017
Shaft — oil pump	60	6A605
Shaft — oil pump intermediate	60	6A618
Shaft — output (also refer 7A061)	70A	7061
Shaft — parking pawl	70B	7D071
Shaft — rear axle differential pinion	40	4211
Shaft — rear band servo actuating lever	70B	7A171
Shaft — reverse idler gear	70A	7140

Index

PART NAME	SECT.	BASIC NUMBER
S cont.		
Shaft – steering gear	30	3524
Shaft – steering gear sector	30	3575
Shaft – valve rocker (refer 6563)	60	6A565
Shaft – valve rocker arm	60	6563
Shell – input	70B	7D064
Shield – body rocker panel front	100B	104A50/1
Shield – body rocker panel wire rear	100B	104A52
Shield – brake	20	2B116
Shield – choke thermostat	90	9861
Shield – clutch release lever dust	75	7513
Shield – control selector indicator lamp	70B	7E285
Shield – engine mount heat	60	6C038
Shield – front brake disc	20	2K004/5
Shield – front fender splash rear	160	16B568/9
Shield – front seat cushion side	600	62184
Shield – quarter panel to bumper end	200	280A94
Shield – rear lamp	130	13A415
Shield – rear lamp in boot	150	15B201
Shift Assy. – gear	70A	7200
Shim	400	430A36
Shim – front spring	50	5355
Shim – power steering valve	30	3D688
Shim – rear axle pinion bearing – front – selective fit	40	4672
Shim – rear axle pinion bearing rear – selective fit	40	4663
Shim – rear door lock striker plate	200	265A06
Shim – tailgate lock lower striker	400	43152
Shoe and Lining Assy. – primary front/rear wheel brake	20	2018
Shoe and Lining Assy. – primary front wheel brake (refer 2001)	20	2018
Shoe and Lining Assy. – primary rear wheel brake (refer also 2018)	20	2218
Shoe and Lining Assy. – secondary front/rear wheel brake	20	2019
Shoe and Lining Assy. – secondary front wheel brake (refer 2001)	20	2019
Shoe and Lining Assy. – secondary rear wheel brake (refer also 2019)	20	2219
Shoe and Lining Assy. – rear wheel brake (refer 2001)	20	2218/9
Shroud Assy. – steering column lock	30	3A690
Shroud Assy. – trans. selector indicator lamp	150	15A811
Shroud Fan	80	8146
Shroud – fuel filler pipe	400	454A56
Shroud – taxi meter	000	043A69
Side arch Wire – front seat cushion	600	60542/3
Sleeve axle shaft seal	40	4A300
Sleeve – coil retaining	10	11105
Sleeve Coupling – steering	30	3B708
Sleeve – draglink adjusting	30	3314
Sleeve – gear shift connecting rod adjusting	70A	7353
Sleeve – gear shift connecting rod adjusting	70B	7353
Sleeve – interlock shifter	70A	7233
Sleeve – main oil pressure booster	70B	7D002
Sleeve – oil distributor	70B	7C232
Sleeve – oil output shaft selective fit	70B	77063
Sleeve – shaft plate	120	12A075
Sleeve – steering column upper bearing	30	3518
Sleeve – valve spring retainer	60	6517
Slide – control selector lever	70B	7C445
Slinger – crankshaft oil	60	6310
Slip Ring – rotor	100	10328
Small – parts sets	110	11A001
Snap Ring – breaker plate	120	12146
Snap Ring – convertor reactor – clutch retainer	70B	7945
S cont.		
Snap Ring – front band servo piston sleeve to servo	70B	77366
Snap Ring – governor	70B	7E253
Snap Ring – mainshaft 1st,2nd,3rd, reverse synchro & speedo gear (refer also 17285)	70A	7059
Snap Ring – output shaft ring gear	70B	7C122
Snap Ring – rear band servo piston	70B	77417
Snap Ring – rear clutch cylinder	70B	77567
Snap Ring – rear clutch piston spring	70B	77517
Snap ring – rotor stop	100	10370
Socket & Retainer Assy. – cigar lighter	150	15055
Socket & Wire Assy. – dome lamp	130	13A719
Socket & Wiring Assy. – licence lamp	130	13412
Socket Assy. – cigar lighter lamp	150	15K050
Socket Assy. – lamp instrument cluster	130	13728
Socket assy. – rear & stop lamp	130	13411
Socket – back window regulator stem	400	44017
Socket – brake adjusting screw	20	2048
Socket – gear shift lever	70B	7228
Socket – trans. gear shift lever	70A	7228
Solenoid	110	11A450
Solenoid – throttle emission	90	9D856
Spacer – alternator bracket	100	10A370
Spacer – air delector	400	44220
Spacer – air vent control	000	01861
Spacer Assy. – muffler mounting bracket	50	5C236/7
Spacer – brace to engine	70B	7B978
Spacer – brake and clutch master cylinder push rod	20	2B129
Spacer – brake backing plate to rear axle	20	2A213
Spacer – brake pedal	20	2A188
Spacer – brake threeway union to axle housing	50	5A788
Spacer – c/shaft gear bearing	70A	7115
Spacer – camshaft sprocket	60	6265
Spacer – carburettor to manifold	90	9A589
Spacer – choke control	000	01861
Spacer – choke thermostat lever	90	9812
Spacer – clutch slave cylinder to housing	75	7A506
Spacer – console arm rest – (paint to suit)	Soft Trim	045A26
Spacer – dual door mounting	170	17A688
Spacer – engine rear support	60	6A066
Spacer – engine rear suspension insulator	60	6A068
Spacer – front and rear bumper	170	17A924
Spacer – front seat back & cushion	600	60310
Spacer – front seat track	600	61782
Spacer – front stabilizer bar	50	5490
Spacer – front suspension lower arm strut insulator	30	3473
Spacer – idler pulley bracket	80	8A652
Spacer – oil pan protection plate and No. 2 cross member	60	6A681
Spacer – oil pressure regulator valve	70B	7470
Spacer – parking brake mounting bracket	20	2A850
Spacer – pinion bearing	40	4662
Spacer – rear door window regulator motor bracket	200	270A50
Spacer – rear spoiler	400	44231
Spacer – rear spring centre mounting	50	5B736
Spacer – reverse band servo	70B	7D300
Spacer – rocker panel moulding	100B	102A78
Spacer – sleeve steering	30	3C703
Spacer – speedo gear drive	170	17288
Spacer – spoiler front and rear	400	44230
Spacer – starter motor	110	11A005
Spacer – tailgate upper hinge on body	400	43098
Spacer – trans. to relay shaft bracket	70B	7A093
Spacer – valve spring	60	6515

Index

PART NAME	SECT.	BASIC NUMBER
S cont.		
Spacer — water pump pulley to fan	80	8546
Spacer — windshield glass lower	000	030A12
Spacer — windshield outside belt moulding	000	03150
Spark — plug	120	12405
Speedometer Assy. (refer 17282)	170	17255
Speedometer Assy. — less mounting plate	170	17282
Spoiler and Support Assy. — rear	400	442A02
Spoiler — Front	190A	17A779
Spoiler — rear deck lid	190A	54 442A02
Spindle — front wheel	30	3107/8
Spring	120	12192
Spring	110	11103
Spring — accelerator pump	90	9D598
Spring — accelerator pump return	90	9B545
Spring — accelerator shaft retracting	90	9737
Spring — accelerator shaft to pedal	90	9760
Spring — air valve	90	9H556
Spring & Bush Assy. — rear	50	5556
Spring & Frame Assy. — front seat back	600	64700/1
Spring & Frame Assy. — front seat cushion	600	63100/1
Spring & Frame Assy. — rear seat cushion	600	63120
Spring Assy. — clutch pedal lever assist	75	7A524
Spring Assy. — front	50	5310
Spring Assy. — manual valve detent	70B	7E332
Spring Assy. — rear	50	5560
Spring Assy. — rear seat back	600	66700
Spring — back door check arm and link retaining	400	44132
Spring — back window regulator socket retainer	400	44050
Spring — bowl vent rod	90	9560
Spring — brake adjusting screw	20	2049
Spring — brake master cylinder	20	2177
Spring — brake shoe hold down	20	2068
Spring — brake shoe retracting	20	2035
Spring — brush	100	10349
Spring — choke	90	9D565
Spring — choke lever	90	9539
Spring — choke lever	90	9587
Spring — clutch master cylinder	20	2177
Spring — control selector — lever return	70B	7B071
Spring — convertor overrunning	70B	7A814
Spring — diaphragm	90	9396
Spring — differential clutch	40	4214
Spring — differential side gear	40	4A024
Spring — door check on lower hinge	200	21232
Spring — door vent window pivot	200	22926
Spring — dowel hood lock	160	16A902
Spring — engaging	110	11375
Spring — fast idle cam	90	9C526
Spring — float	90	9F570
Spring — float hinge pin	90	9599
Spring — front band servo piston retracting	70B	7A003
Spring — front clutch piston disc	70B	7B070
Spring — front seat cushion centre	600	63112
Spring — front seat cushion helper	600	63186
Spring — front seat cushion intermediate	600	63166
Spring — front seat track assist	600	61828
Spring — front seat track latch	600	61883
Spring — gear shift lever detent	70A	7227
Spring — headlamp adjusting	130	13031
Spring — hood auxiliary catch	160	16897
Spring — hood hinge	160	16789
Spring — hood latch external	160	16A704
Spring — hood lock trigger	160	16921
Spring — kickdown control lever retracting	70B	7B146
Spring Kit — rear helper	190A	5A589

PART NAME	SECT.	BASIC NUMBER
S cont.		
Spring — main oil pressure regulator valve	70B	7A270
Spring — manual pressure valve regulator	70B	7B025
Spring — manual valve bias	70B	7K393
Spring — manual valve detent lever	70B	7A261
Spring — master cylinder return	20	2145
Spring — needle idle adjust	90	9578
Spring — oil pressure regulator low control valve	70B	7D160
Spring — oil pump relief valve	60	6670
Spring — parking brake anchor release	70B	7A180
Spring — parking brake equalizer lever retracting	20	2A651
Spring — parking brake link anti rattle	20	2A601
Spring — parking pawl retainer	70B	7D070
Spring — parking pawl toggle link	70B	77314
Spring — parking pawl toggle return	70B	7E416
Spring — pump	90	9B548
Spring — pump lever adjusting screw	90	9571
Spring — pump piston	90	9636
Spring — rear band servo accumulator	70B	77369
Spring — rear band servo piston	70B	77415
Spring — rear band servo piston	70B	7D474
Spring — rear clutch pressure plate	70B	7E085
Spring — rear seat cushion intermediate	600	63167
Spring — regulator counter balance (refer also 30351)	200	23318
Spring — retainer	20	2185
Spring Retainer — clutch release lever	75	7562
Spring — return	20	2A157
Spring — return	90	9A538
Spring — reverse lockout run	70B	7C300
Spring — reverse rear clutch piston	70B	7A480
Spring — reverse servo piston	70B	7D031
Spring — rocker arm	90	9380
Spring — secondary throttle return	90	9B504
Spring — seat back latch	600	605A15
Spring — servo piston	70B	7D028
Spring Set — brush	110	11059
Spring — shifter interlock	70A	7234
Spring — slow return adjusting screw	90	9589
Spring synchronizer	70A	7D176
Spring — tailgate cable check	400	444A12
Spring — tailgate latch	400	43181
Spring — trans. gear shift anti-vibrator	70A	7C228
Spring — transmission kickdown	90	7B146
Spring — transmission kickdown (refer section 95)	70A	7B176
Spring — trans. kickdown (refer section 95)	70B	7B176
Spring — valve	60	6513
Spring — valve rocker arm locating	60	6587
Spring — wheel brake cylinder piston return — rear/front	20	2204/2205
Spring — window regulator counter balance	200	30351
Sprocket — camshaft	60	6256
Sprocket — crankshaft	60	6306
Stabilizer Assy. — door glass inner	200	22380/1
Stabilizer — disc brakes	20	2B295
Starter motor assemblies	110	11001
Stator & Coil Assy.	100	10336
Stator — convertor	70B	7932
Stator — wound	100	10A347
Steering Wheel Kit	190A	3600
Stem — vent valve	90	9B545
Stowage — seat belt	Soft Trim	610B75
Strainer — package tray to wheel house	400	46774/5
Striker Assy. — door lock	200	22008
Striker Assy. — tailgate lower lock	400	431E72
Striker Assy. — tailgate upper latch	400	431F52/3

Index

PART NAME	SECT.	BASIC NUMBER
S cont.		
Striker — rear seat back latch	600	62440
Striker — tailgate latch	400	431A82
Strip Assy. — headlining rear	Soft Trim	51917
Strip — plastic sun roof	500	502K11
Strip — roof headlining	500	52194/5
Stripe — front door	200	208A08/9
Stripe — front fender	160	16D142
Stripe — quarter panel	200	291C52/3
Stripe — rear door	200	253A12/3
Stop Assy. — door window upper	200	21768
Stop Assy. — front door window lower	200	21758
Stop Assy. — quarter window lower	200	29805
Stop Assy. — rear door window lower	200	27070/1
Stop Assy. — tailgate lower hinge	400	430A48
Stop — gate check cable spring	400	444A16
Stop — rear band adjusting inner	70B	7E284
Stop — ring	110	11223
Stop — vacuum advance	120	12202
Strut Assy. — front band anchor	70B	7E243
Strut — front brake band (refer also 7A175)	70B	7A158
Strut — front suspension lower arm	30	3468/9
Strut — intermediate brake band	70B	7D029
Strut — rear band actuating	70B	7A172
Strut — reverse band anchor	70B	7A175
Stud — anchor	400	40056
Stud Assy. — tonneau cover fastener	400	40692
Stud — convertor drive	70B	7964
Stud — stabilizer link	50	5495
Stud — valve rocker arm support	60	6A527
Sundry Parts Set	100	10B301
Sunvisor — external	190A	18236
Support Assy. & Bracket — brake pedal	000	015A08
Support — armrest console	000	045A08/9
Support Assy. — battery tray	100	10A666
Support Assy. — battery tray rear	100	10K671
Support Assy. — booster venturi	90	9A523
Support Assy. — brake pedal	000	01508
Support Assy. — front pump	70B	7A108
Support Assy. — frame engine rear	50	5059
Support Assy. — front fender apron & radiator	160	16138
Support Assy. — fuel tank	90	9A017
Support Assy. — fuel tank centre	100B	111A39
Support Assy. — gear shift lever inner	70A	7A290
Support Assy. — hood lock	180	16774
Support Assy. — luggage compartment door latch	400	42898
Support Assy. — power steering pump	30	3C511
Support Assy. — quarter window guide lower	200	29790
Support Assy. — rear	70B	7A383
Support Assy. — rear seat back	600	61316/7
Support Assy. — roof front	500	512A70
Support Assy. — roof rear	500	512A78
Support Assy. — spare wheel compartment door	400	472A35
Support Assy. — weatherstrip front door side rail	500	512A24
Support — console rear	000	045A24
Support — core heater	180	18B596
Support — evaporator core	190	19784
Support — frame to body front	500	502A12
Support — frame to body side inner front	500	502A10
Support — frame to body side outer	500	502A11
Support — front sun roof	500	502L15
Support — gear shift lever outer	70A	7416
Support — master cylinder push rod seal	20	2384
Support — master cylinder push rod seal (refer Section 20A)	20	2384
S cont.		
Support — package tray to roof rear corner	500	525A66/7
Support — parking pawl lever	70B	7D166
Support — roof headlining	500	52101/7
Support — valve rocker arm shaft front	60	6531
Support Washer	100	10B333
Switch Assy. — back up lamp	150	15520
Switch Assy. — blower	190	19A642
Switch Assy. — brake master cylinder differential warning	20	2B264
Switch Assy. — courtesy lamp	130	13713
Switch Assy. — driving lights	150	15A200
Switch Assy. — electric window regulator control	140	14529
Switch Assy. — gear shift neutral	70B	7A247
Switch Assy. — heater	180	18578
Switch Assy. — ignition	110	11572
Switch Assy. — lighting	110	11654
Switch Assy. — oil pressure sender	90	9278
Switch Assy. — power tailgate	130	13K724
Switch Assy. — rheostat control	130	13A701
Switch Assy. — seat belt warning light	100	10B924
Switch Assy. — seat belt warning sensor	70A	7E449
Switch Assy. — stereo balance control	180	18972
Switch Assy. — stop lamp	130	13480
Switch Assy. — tailgate window limit	140	14A011
Switch Assy. — trans. neutral start	150	15824
Switch Assy. — valve heater water control	190	19A945
Switch — window regulator multiple	140	14540
Switch Assy. — windshield wiper	170	17A553
Switch — air sensor	90	9E607
Switch — mounting plate assy. — turn signal control	130	13341
Swivel — choke diaphragm adjusting	90	9F558
Synchronizer Assy.	70A	7124
T		
Tab Tidy — seat belt	Soft Trim	602A08
Tachometer Assy.	170	17360
Tag — warning alternator	100	10A399
Tappet Assy. — valve	60	6500
Tank Assy. — fuel	90	9002
Tee — hose heater	180	18306
Terminal — field	110	11102
Thermostat Assy. — water	80	8575
Thermostatic choke heater	90	9E727
Tonneau — cover assy.	400	40650
Towbar Bracket	190A	19B011
Towbar — less detachable bracket	190A	19A009
Track Assy. — front seat	600	61704/5
Tray Assy. — battery	100	10732
Tray Assy. — sliding sun roof	500	502K20
Trim Cover — front door upper	Soft Trim	23916/7
Trim Cover — glove compartment door	Soft Trim	06126
Trim Cover — instrument panel centre — with air Conditioner	Soft Trim	044B86
Trim Cover — instrument panel centre — without air Conditioner	Soft Trim	044B86
Trim Cover — instrument panel L.H.	Soft Trim	04291
Trim Cover — rear door upper	Soft Trim	27430/1
Trim — instrument bezel cluster	100	10A872
Trough — luggage compartment door opening lower corner drain	400	45118/9

Index

PART NAME	SECT.	BASIC NUMBER
T cont.		
Trough — luggage compartment upper corner drain	400	45120/1
Trunnion — accelerator shaft to bellcrank rod	90	9A846
Trunnion — trans. gear shift lever	70A	7B125
Tube & Shroud Assy. — carburettor air cleaner	70	9A603
Tube Assy. — brake master cylinder to differential valve — rear	20	2B253
Tube Assy. — breather	70B	7A246
Tube Assy. — clutch master cylinder to slave cylinder	75	7A512
Tube Assy. — crankcase ventilation	60	6758
Tube Assy. — differential valve to union	20	2B329
Tube Assy. — front wheel brake	20	2263/4
Tube Assy. — fuel pump to carburettor	90	9369
Tube Assy. — gear shift	70A	7212
Tube Assy. — gear shift	70B	7212
Tube Assy. — master cylinder to union	20	2A265
Tube Assy. — master cylinder primary port to diff. valve	20	2B328
Tube Assy. — oil cooler — oil inlet	70B	7A030
Tube Assy. — oil cooler — oil outlet	70B	7A031
Tube Assy. — oil filler	70B	7A228
Tube Assy. — oil level	60	6754
Tube Assy. — rear wheel brake	20	2267/8
Tube Assy. — steering column	30	3514
Tube Assy. — thermostat choke heater	90	9C869
Tube Assy. — union to rear brake hose	20	2265
Tube — clutch and governor oil	70B	7A173/4
Tube — clutch and governor oil	70B	7A170
Tube — compensator pressure oil	70B	7A206
Tube — convertor in and out	70B	7A204
Tube Convertor — inlet	70B	7B030
Tube — front band servo oil	70B	7D469
Tube — differential valve pressure control to R.H. front brake	20	2B269
Tube — distributor vacuum	120	12226
Tube — float bowl connector	90	9H576
Tube — front band servo oil	70B	77379
Tube — front pump inlet	70B	7A160
Tube — front pump outlet	70B	7A204
Tube — fuel tank vent	190	9049
Tube — main oil pressure	70B	77469
Tube — oil distributor	70B	7D000
Tube — oil pressure regulator lubricating	70B	7A208
Tube — rear pump outlet oil	70B Soft	7A204
Tube — tailgate drain	400	40743
Tube — thermostatic choke control inlet	190	9820
Tube — thermostatic choke control outlet	190	9819
Tube — vacuum, engine to transmission	70B	7B084
Tube — water pump by-pass	80	8555
Tyre Pump	190A	17052

U

'U' Bolt — universal joint	40	4529
'U' Bolt — rear spring	50	5705
'U' Bolt — stabilizer bar mounting	50	5A784

V

Vacuum Hose	170	9C704
Vacuum Tank & Bracket Assy.	190	19A566
Valve — accelerator pump check	90	9576
V cont.		
Valve — accelerator pump discharge needle	90	9A516
Valve and Seat Assy.	90	9564
Valve — air	90	9H555
Valve & Bracket Assy. — heater water control	180	18495
Valve Assy.	90	9352
Valve Assy. — compressor high pressure — air conditioner	190	19A990
Valve Assy. — compressor low pressure — air conditioner	190	19752
Valve Assy. — distributor vacuum control	120	12A091
Valve Assy. — evaporator expansion	190	19849
Valve Assy. — fuel bowl vent	90	9557
Valve — idle vent	90	9A545
Valve Assy. — lube connector	70B	7D174
Valve Assy. — power	70	9G551
Valve Assy. — pump check	90	9573
Valve Assy. — vacuum selector	190	19B888
Valve Assy. — water cut off	180	18495
Valve — exhaust	60	6505
Valve — intake	60	6507
Valve — intermediate servo accumulator check	70B	7D376
Valve — main oil pressure regulator	70B	7C388
Valve — main valve body manual control	70B	7C389
Valve Plate Assy. — compressor	190	19656
Valve — rear band servo check	70B	77658
Valve Spacer Clutch Master Cylinder	20	2L081
Valve stem	20	2182
Vehicle — trailer electrical installation	190A	14A461
Velvet — sealer — sun roof	500	502C12
Venetian Shade	190A	18246
Vent Assy.	70A	7034
Vent Assy. — (refer also 4022)	40	4338
Vent Assy. — case	70B	7034
Valve Assy. — crankcase vent regulator	60	6A666
Vent Assy. — rear axle housing (refer also 4338)	40	4022
Ventilation Assy. — cold air	190 Soft	19K501
Visor — inside less arm and bracket	Trim	04104

W

Washer	20	12179
Washer (also refer 11A351)	110	11036
Washer and Shock Absorber Insulator — inner	180	18171
Washer — brake and clutch pedal shaft spring	75	7512
Washer — camshaft sprocket	60	6278
Washer — choke spring	90	9839
Washer — clinch button seat	600	644A29
Washer — convertor stator rear & intermediate thrust	70B	7937
Washer — crankshaft pulley or damper retaining	60	6378
Washer — diaphragm spring seat	90	9371
Washer — differential pinion thrust	40	4230
Washer — differential side gear thrust	40	4228
Washer — door window regulator roller	200	270A58
Washer — field terminal	110	11093
Washer — field terminal insulating	110	11094
Washer — field terminal screw	110	11095
Washer — forward clutch hub thrust	70B	7D090
Washer — front clutch hub thrust	70B	7A533
Washer — front clutch hub thrust	70B	7D104
Washer — front clutch sun gear thrust	70B	7D484

Index

PART NAME	SECT.	BASIC NUMBER
W cont.		
Washer — front clutch sun gear thrust — front	70B	77545
Washer — front cylinder hub thrust	70B	77577
Washer — front pump support (selective fit)	70B	7D014
Washer — front suspension lower arm anchor	30	3A141/2
Washer — front wheel bearing retainer	10	1195
Washer — input shaft thrust assy.	70B	7019
Washer — input shell thrust	70B	7D066
Washer — output shaft front thrust — selective fit	70B	7A385
Washer — output shaft thrust rear	70B	7B368
Washer — rear clutch sun gear thrust	70B	7A166
Washer — reverse brake drum	70B	7C096
Washer — reverse drum to case	70B	7D072
Washer — reverse planet pinion	70B	7A242
Washer — secondary sun gear thrust inner	70B	77524
Washer — shock absorber insulator outer	180	18041
Washer — spring clutch master cylinder	75	7A544
Washer — steering column thrust	30	3C708
Washer — through bolt	110	11A114
Washer — thrust (also refer 11036)	110	11A351
Washer — turbine to convertor cover	70B	7962
Washer — valve rocker arm shaft spring	60	6598
Weathershield	190A	18492
Weathershield — hardware kit	190A	18A492
Weatherstrip — back door window	400	41954/5
Weatherstrip Assy. — back window	400	42084
Weatherstrip Assy. — door glass front at belt	200	21436/7
Weatherstrip Assy. — door vent window	200	21448/9
Weatherstrip Assy. — front door	200	20530/1
Weatherstrip Assy. — front door glass at belt — outside	200	21452/3
Weatherstrip Assy. — L.H. back door bottom	200	253A26
Weatherstrip Assy. — quarter window glass inner at belt	200	29730
Weatherstrip Assy. — quarter window glass outer	200	29732
Weatherstrip Assy. — rear door	200	25324/5
Weatherstrip Assy. — rear door glass at belt inside (refer also 25596/7)	200	25860/1
Weatherstrip Assy. — rear door glass at belt outside (also refer 25860/1)	200	25596/7
Weatherstrip Assy. — tailgate	400	41608
Weatherstrip Assy. — tailgate and back door lower sill opening	400	416A08
Weatherstrip Assy. — tailgate outside belt	400	41674
Weatherstrip Inset — bodyside fixed glass	200	299A04
Weatherstrip — luggage compartment door	400	43720
Weatherstrip — quarter window front	200	30146/7
Weatherstrip — quarter window stationary glass	200	29904
Weatherstrip — rear door stationary window	200	26928
Weatherstrip Assy. — roof side rail front	500	51222/3
Weatherstrip — roof side rail rear	500	513A68/9
Weatherstrip — sun roof	500	502C50
Weatherstrip — tailgate inside belt	400	41672
Wedge — steering column adjusting	30	3A677
Weight — pump discharge ball	90	9B511
Weights	120	12188
Wheel Assy.	10	1007
Wheel Assy. — steering	30	3600
Wheel Disc and Covers	190A	18303
Wheel Nut Kit — locking	190A	1A012
Wheel Kit — sports road	190A	1007

PART NAME	SECT.	BASIC NUMBER
W cont.		
Windlace — door opening (refer also soft trim section)	000	02606
Window Assy. — door vent	200	21402/3
Windscreen protector kit	190A	19000
Wire Assy.	140	14334
Wire Assy. — back up lamp	150	15A515
Wire Assy. — back up lamp wire extension	150	15A525
Wire Assy. — breaker ground	120	12264
Wire Assy. — headlamp lead	130	13076
Wire Assy. — horn wire extension	130	13B801
Wire Assy. — ignition coil to distributor	120	12298
Wire Assy. — luggage compartment lamp	130	13B756
Wire Assy. — primary terminal	120	12216
Wire Assy. — rheostat earth	130	13B691
Wire Assy. — transmission selector dial lamp	150	15A808
Wire Assy. — turn signal lamp socket	150	15536
Wire — spark plug	120	12282/7
Wiring and Socket Assy. — control selector indicator	70B	7B036
Wiring Assy. — aerial double extension	140	14B402
Wiring Assy. — air conditioner — evaporator	190	19B657
Wiring Assy. — ash tray	140	14B401
Wiring Assy. — back up lamp switch to feed	150	15525
Wiring Assy. — back window regulator	140	14687
Wiring Assy. — back window regulator feed	140	14683
Wiring Assy. — double extension ash tray	140	14B400
Wiring Assy. — driving lamp switch to relay	150	15K232
Washer — c/shaft gear thrust front	70A	7119
Washer — camshaft gear thrust rear inner	70A	7A037
Washer — camshaft gear thrust rear outer	70A	7A038
Washer — output shaft	70A	7A385
Wiring Assy. — front door with power window	140	14630/1
Wiring Assy. — instrument cluster	100	10942
Wiring assy. — instrument cluster auxiliary charge	100	10B942
Wiring Assy. — main	140	14401
Wiring Assy. — power window extension	140	14085
Wiring Assy. — rear door courtesy lamp	130	13B721
Wiring Assy. — rear door with power window	140	14632/3
Wiring Assy. — rear lamp	140	14405
Washer — reverse idler gear thrust	70A	7149
Wiring Assy. — road lamp	150	15237
Wiring Assy. — road lamp switch to light switch	150	15248
Wiring Assy. — roof light	150	15B581
Wiring Assy. — switch to thermostat	190	19A657
Washer — tab m/drive m/shaft	70A	7071
Wiring Assy. — tachometer	170	17A299
Wiring Assy. — tachometer feed	170	17B280
Wiring Assy. — tachometer ground	170	17K271
Wiring Assy. — warning lamp seat belt	140	14A440
Wiring Assy. — water valve switch to clutch	190	19A885
Wiring Assy. — window regulator safety relay to window regulator switch	140	14A200
Wiring — earth heater control	180	18A549
Wiring — jumper	110	11A103
Worm Valve & Sleeve Assy.	30	3524
Wrench — jack handle & wheelnut	170	17035

Index

PART NAME	SECT.	BASIC NUMBER	PART NAME	SECT.	BASIC NUMBER
Y					
Yoke & plug assy. — universal joint (refer to drive shaft chart for code application) . . .	40	4841			

CHASSIS SECTION

MODEL	BODY TYPE	REMARKS	UNIT	PART NUMBER		
– – 1001 – – GASKET – REAR WHEEL BEARING RETAINER						
XA/B, ZF/G	All	351 c.i.d. – 2-15/16" I.D. – 4 holes	2	A8AZ	1001	A
– – 1001 – – GASKET – REAR BRAKE CARRIER PLATE						
XA/B, ZF/G	All	6 cyl. & 302 c.i.d.	2	XA	1001	A
XA/B, ZF/G	All	351 c.i.d. – 2-7/8" I.D. – 4 holes	2	D00Z	1001	A
XA/B, ZF/G	All	351 c.i.d. – backing plate to axle housing	4	C0AA	2256	A
– – 1007 – – WHEEL ASSY.						
XA/B, ZF/G	All	14" x 5" JJ – steel	5	XW	1007	A
XA/B, ZF/G	All	14" x 6" JJ – steel	5	XW	1007	B
XA/B	54H, 65H	14" x 6" JJ – also all with rally pack	5	XB	1007	A
XA/B, ZF/G	All	14" x 6" JJ – mag. type	5	XY	1007	KT
XA/B, ZF/G	All	15" x 7" mag. type	5	XY	1007	A
– – 1012 – – NUT – WHEEL BOLT						
XA/B, ZF/G	All	With standard steel wheel	20	B	1012	A
XA/B	54H, 65H	Also all with rally pack	20	XA	1012	A
XA/B, ZF/G	All	With mag type wheel	16	XY	1012	AA
XA/B, ZF/G	All	With mag type wheels – locking – kit of 4	1	XY	1A012	KT
XA/B, ZF/G	All	Non-locking – use with XY-1007-A – to 2/75	16	XY	1012	B
XB, ZG	All	Non-locking – use with XY-1007-A – from 2/75	16	XB	1012	A*
XA/B, ZF/G	All	Kit – inc's (4) locking nuts & (2) keys – use with XY-1007-A – to 2/75	1	XY	1012	CKT
XB, ZG	All	Locking – use with XY-1007-A – from 2/75	4	XB	1A013	A*
XA/B, ZF/G	All	Washer – wheel nut seal – use with XY-1007-KT	20	V 388032 S100		
– – 1A012/3 – – NUT – WHEEL BOLT (REFER 1012)						
– – 1102 – – HUB & DRUM ASSY. – FRONT WHEEL						
XA, ZF	54, 65, 71		2	XA	1102	AA
XA	66, 78	10 cwt. capacity	2	XA	1102	AA
XA	66, 78	15 cwt. capacity	2	XA	1102	CA
XA, ZF	All	Nut – 13/16" – 20 – att. front hub & drum assy. to front wheel spindle	2	383840 S		
XA, ZF	All	Nut – retainer lock – att. front hub & drum assy. to front wheel spindle	2	383841 S		
– – 1102 – – HUB & DISC ASSY. – FRONT WHEEL						
XA/B, ZF/G	All		2	XA	1102	BA
XA/B, ZF/G	All	Nut – hub to spindle	2	383840 S		
XA/B, ZF/G	All	Retainer – nut – lock	2	383841 S		
– – 1107 – – BOLT – WHEEL HUB						
XA, ZF	All	Front – with drum brakes	10	ARC6DA	1107	A
XA/B, ZF/G	All	Front – with disc brakes	10	XW	1107	A
XA/B, ZF/G	All	Rear – 6 cyl. & 302 c.i.d.	10	XY	1107	A
XA/B, ZF/G	All	Rear – 351 c.i.d. – rear drum brakes	10	A9AZ	1107	B
XB, ZG	All	Rear – 351 c.i.d. – rear disc brakes	10	PL	1107	AA
– – 1126 – – DRUM OR ROTOR – REAR WHEEL BRAKE						
XA/B	All	Drum – 2" x 10" dia.	2	ARC6DA	1126	A
XA/B	All	Drum – 2½" x 10" dia.	2	XA	1126	AA
XA	54H, 65H	Drum – GT HO	2	XY	1126	AA
XB, ZG	All	Rotor	2	PL	1126	AA

MODEL	BODY TYPE	REMARKS	UNIT	PART NUMBER		
– – 1130 – – CAP OR COVER – WHEEL HUB						
XA, ZF	All	Cap – standard	4	XA	1130	AA
XA	54H, 65H	Cap – with C80Z-1007-J and XA-1007-A	4	C80Z	1130	G
XA	All	Cap – with rally pack – with C80Z-1007-J	4	C80Z	1130	G
XA, ZF	All	Full cover – except 54G	4	ARD2DA	1130	BA
XA	54C	Full cover	4	ARD1DA	1130	A
ZF	54E,G,	Full cover	4	ARD20A	1130	AA
XA/B, ZF/G	All	Centre cover – with XY-1007-KT – XY-1007-A	4	XY	1A130	AA
XA/B	All	Centre cover – with rally pack 'GS'	4	XA	1A130	B
XA/B	54H, 65H	Centre cover 'GT'	4	XA	1A130	A
XA/B, ZF/G	All	Rim trim – with 5" rim – O.N.R.	4	XW	18303	A
XA/B, ZF/G	All	Rim trim – with 6" rim – except 54H, 65H – O.N.R.	4	XW	18303	B
XA/B	54H, 65H	Rim trim (also used for the first 250 superbird vehicles)	4	C8ZZ	1210	B
XA	65B	Superbird – used from job 251 onwards	4	XB	1210	A
XB	All	Full cover	4	XB	1130	B
ZG	All	Full cover – to 1/74	4	ZG	1130	A
ZG	All	Full cover – from 1/74	4	D20Z	1130	F
XA/B, ZF/G	All	Screw – No. 8 x .38" attach cap to wheel – use with XY-1007-KT – XY-1007-A	20	40514 S37		
– – 1A130 – – CAP – WHEEL HUB CENTRE PIECE (REFER 1130)						
– – 1131 – – CAP – GREASE FRONT WHEEL						
XA/B, ZF/G	All		2	B5A	1131	A
– – 1177 – – SEAL ASSY. – REAR WHEEL BEARING OIL INNER (ALSO REFER 1A225)						
XA/B, ZF/G	All	6 cyl. & 302 c.i.d. – O.R.B. XY-1A225-A	2	XY	1177	A
XA/B, ZF/G	All	351 c.i.d.	2	C70Z	1177	B
XA/B	All	351 c.i.d. 4V – GT HO	2	C70Z	1177	A
– – 1180 – – RETAINER – REAR WHEEL BEARING INNER (REFER ALSO 1A225)						
XA/B, ZF/G	All	6 cyl. & 302 c.i.d.	2	XY	1180	A
XA/B, ZF/G	All	351 c.i.d. – rear drum brakes	2	C90Z	1180	A
XB, ZG	All	351 c.i.d. – rear disc brakes – serviced only in 4234 assy.	2		1180	
– – 1190 – – RETAINER ASSY. – FRONT WHEEL HUB GREASE						
XA/B, ZF/G	All		2	C8AZ	1190	A
– – 1195 – – WASHER – FRONT WHEEL OUTER BEARING RETAINER						
XA/B, ZF/G	All		2	D0AZ	1195	A
– – 1201 – – CONE & ROLLER ASSY. – FRONT WHEEL INNER BEARING						
XA/B, ZF/G	All		2	D0AZ	1201	A
– – 1202 – – CUP – FRONT WHEEL BEARING INNER						
XA/B, ZF/G	All		2	D0AZ	1202	A
– – 1210 – – RING ASSY. – WHEEL TRIM (REFER 1130)						
– – 1216 – – CONE & ROLLER ASSY. – FRONT WHEEL BEARING – OUTER						
XA/B, ZF/G	All		2	D0AZ	1216	A
– – 1217 – – CUP – FRONT WHEEL BEARING – OUTER						
XA/B, ZF/G	All		2	D0AZ	1217	A
– – 1225 – – BEARING – REAR WHEEL						
XA/B, ZF/G	All	6 cyl. & 302 c.i.d.	2	XY	1225	A
XA/B, ZF/G	All	351 c.i.d. – rear drum brakes	2	CC4AW	1225	A
XB, ZG	All	351 c.i.d. – rear disc brakes – serviced only in 4234 assy.	2		1225	
– – 1A225 – – KIT – RETAINER AND SEAL REAR WHEEL BEARING (REFER ALSO 1177 & 1180)						
XA/B, ZF/G	All	6 cyl. & 302 c.i.d.	2	XY	1A225	A
XB, ZG	All	351 c.i.d. – rear disc brakes – serviced only in 4234 assy.	2		1A225	
– – 1A225 – – RING – REAR WHEEL BEARING LOCKING						
XA/B, ZF/G	All	351 c.i.d. – rear drum brakes	2	ARC70A	1A225	A
– – 1402 – – BRACKET – SPARE WHEEL RETAINING						
XA/B, ZF/G	54, 65, 71		1	XA	1402	A
XA/B	66, 78		1	ARC6DB	1402	A

MODEL	BODY TYPE	REMARKS	UNIT	PART NUMBER		
– – 1457 – – NUT – SPARE WHEEL MOUNTING – WING						
XA/B	66, 78		1	B9A	1457	A
– – 1A457 – – BOLT – SPARE WHEEL MOUNTING – WING						
XA/B, ZF/G	54, 65	5" rims – std. fuel tank	1	XA	1A457	BA
XA/B, ZF/G	54, 65	6" rims – std. fuel tank	1	XA	1A457	AA
XB	54, 65	Large cap. fuel tank	1	XA	1A457	D*
XA/B	71	W/o aux. rear seat	1	XW	1A457	A
XB	71	With aux. rear seat	1	XB	1A457	A
– – 1705 – – EXTENSION – TYRE VALVE						
XA, ZF	All	7/8" long	4	C0DZ	1705	A
XA/B, ZF/G	All	1¼" long	4	B7AZ	1705	A

MODEL	BODY TYPE	REMARKS	UNIT	PART NUMBER

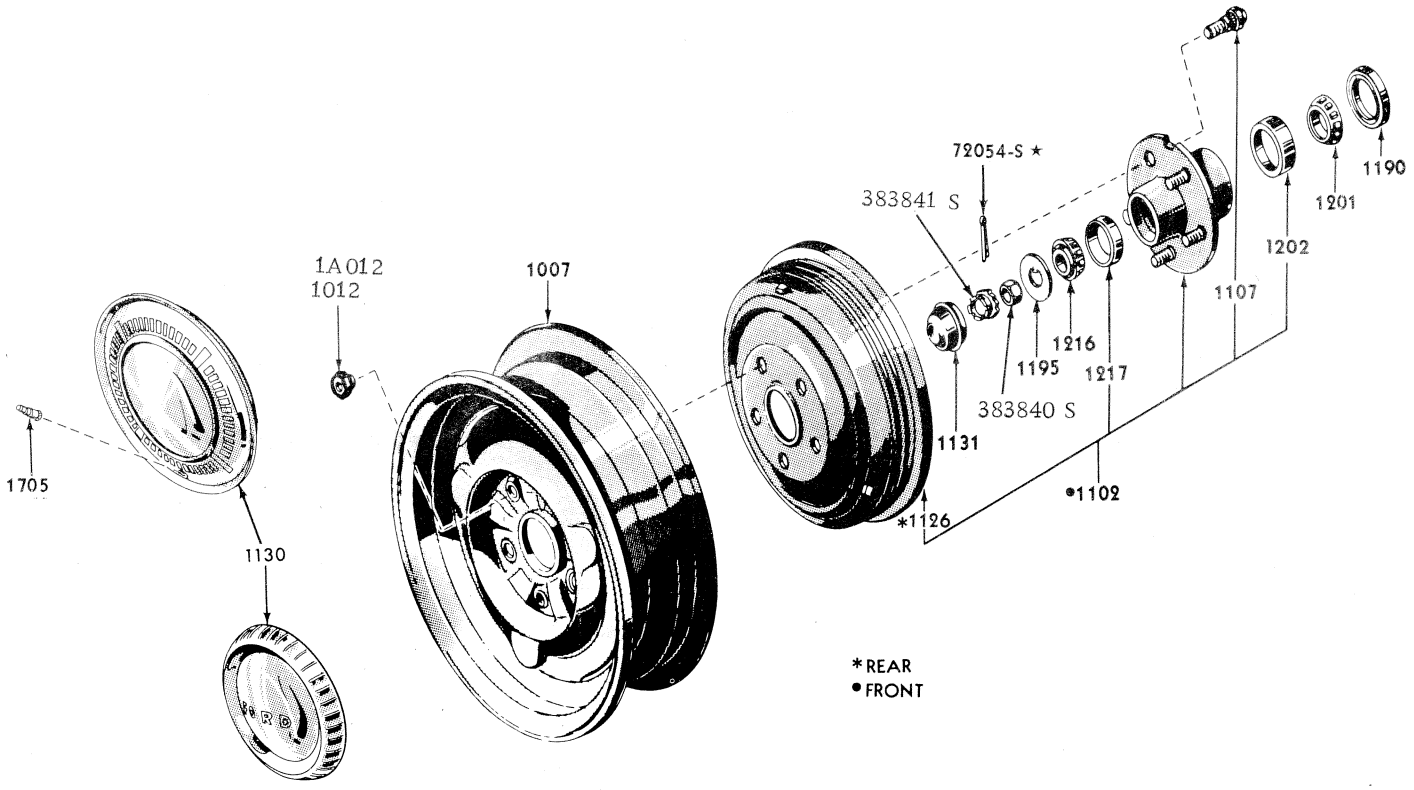

FRONT AND REAR WHEEL, HUB AND BEARINGS

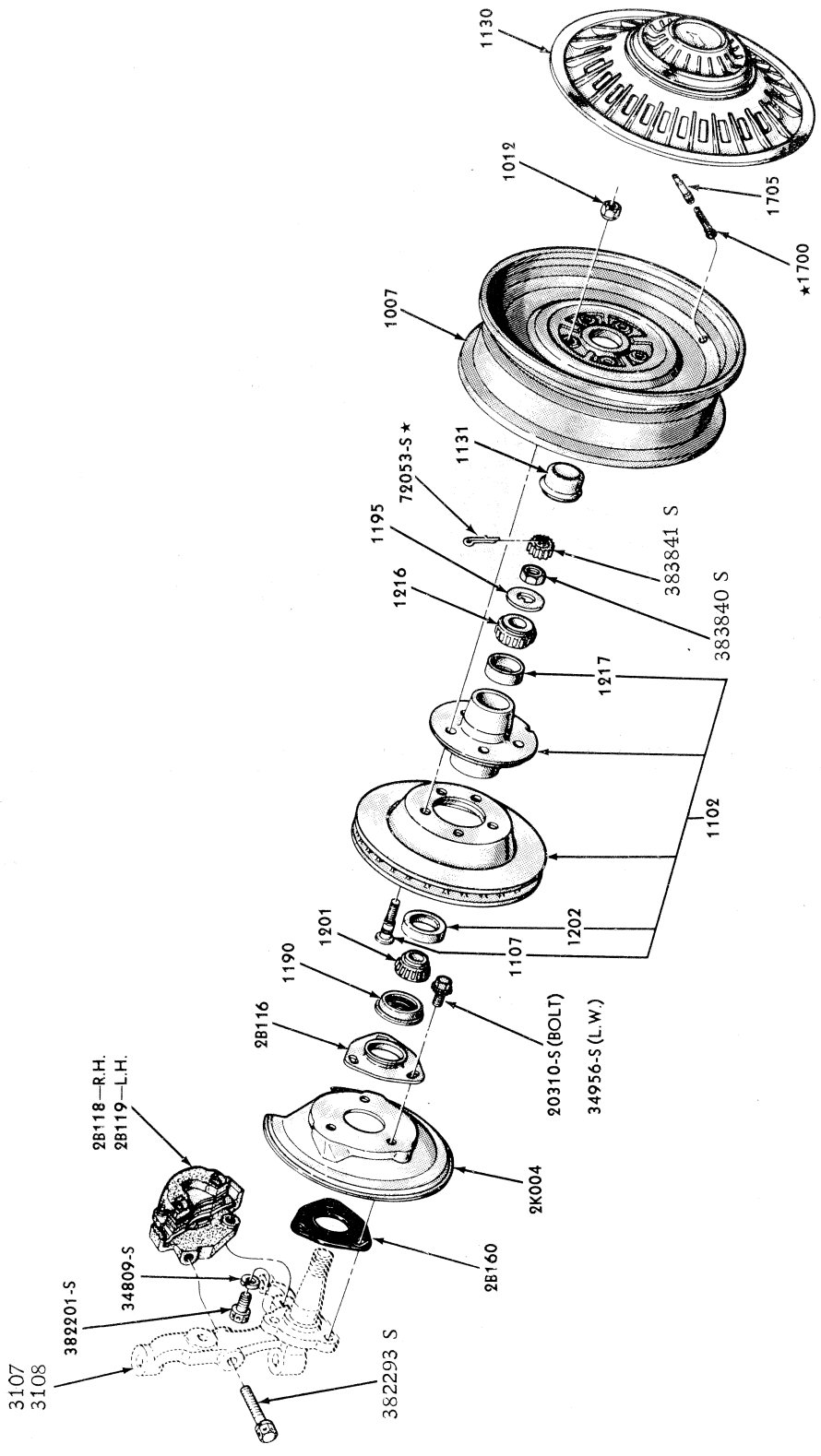

FRONT DISC BRAKE DETAILS

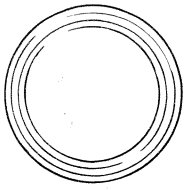

CAP
XA 1130 AA

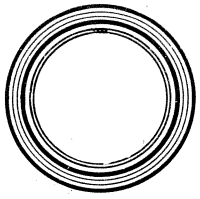

CAP
C8OZ 1130 G

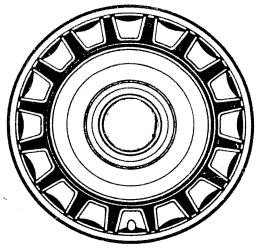

COVER
ARD1DA 1130 A

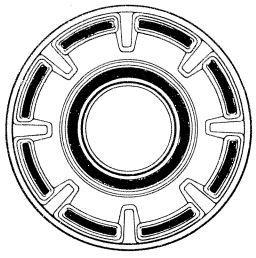

COVER
ARD2DA 1130 BA

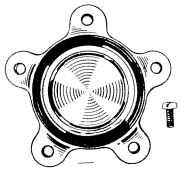

CENTRE PIECE
XY 1A130 AA

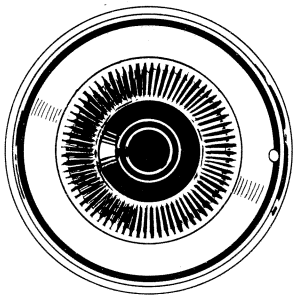

COVER
ARD2OA 1130 AA

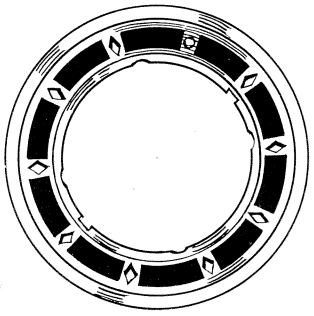

RING
C8ZZ 1210 B

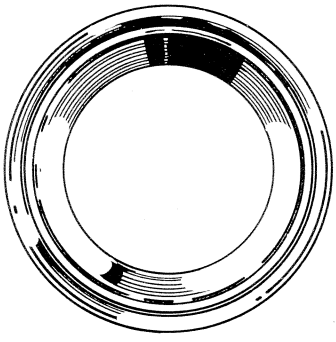

RING

XW 18303 A
XW18303 B

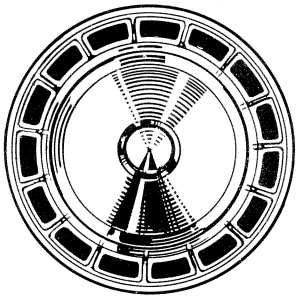

COVER

XB 1130 B

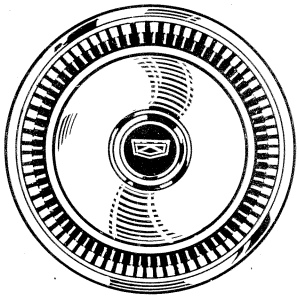

COVER

ZG 1130 A

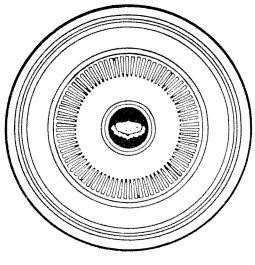

COVER
D2CZ 1130 F

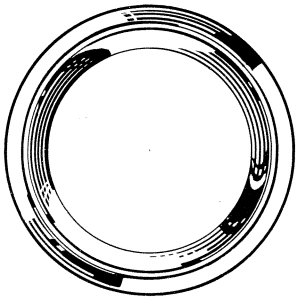

RING
XB 1210 A



CENTRE PIECE
XA 1A130 A

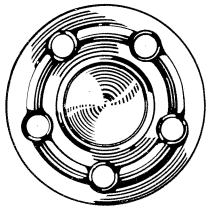

CENTRE PIECE
XA 1A130 B

HUB CAPS WHEEL COVERS AND TRIM RINGS

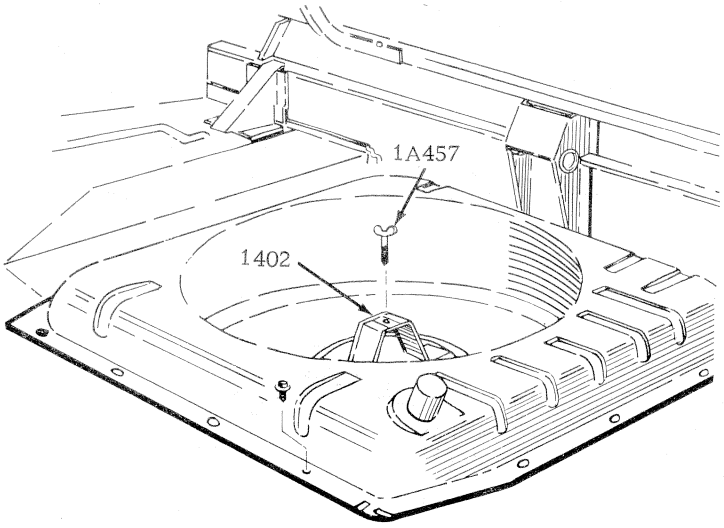

SEDAN

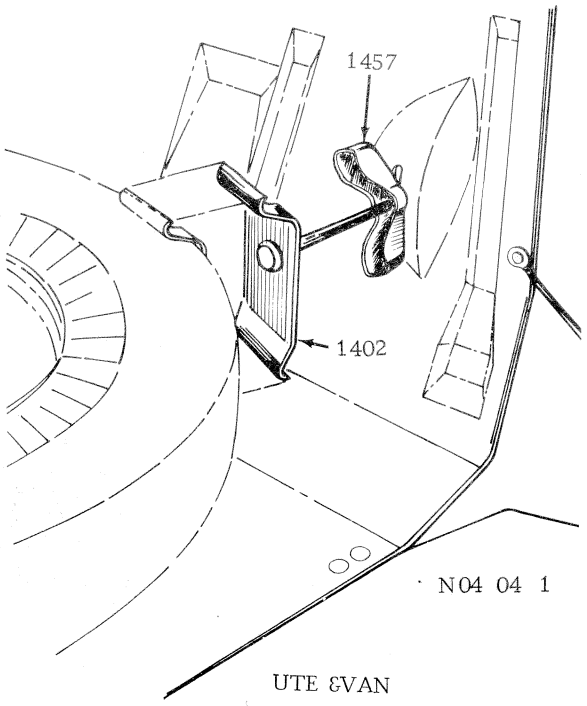

UTE &VAN

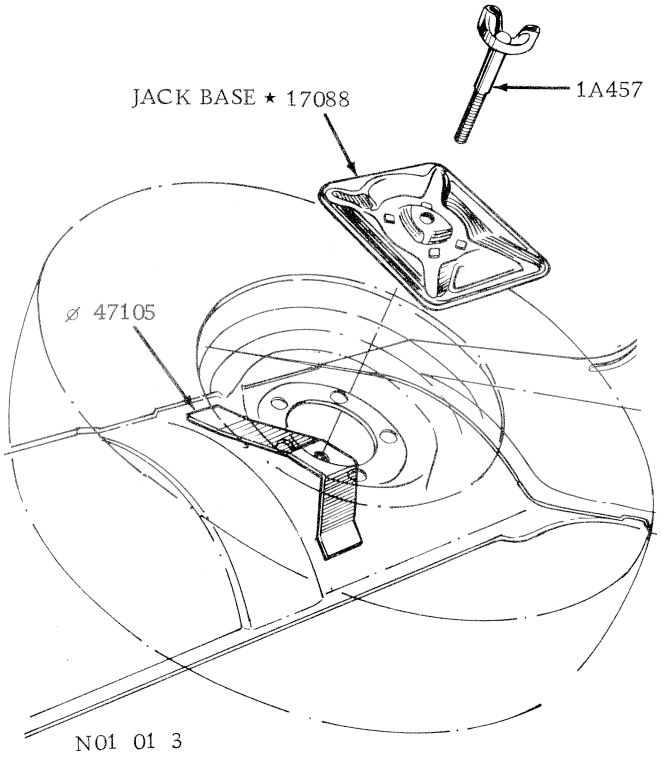

G T W/LARGE FUEL TANK

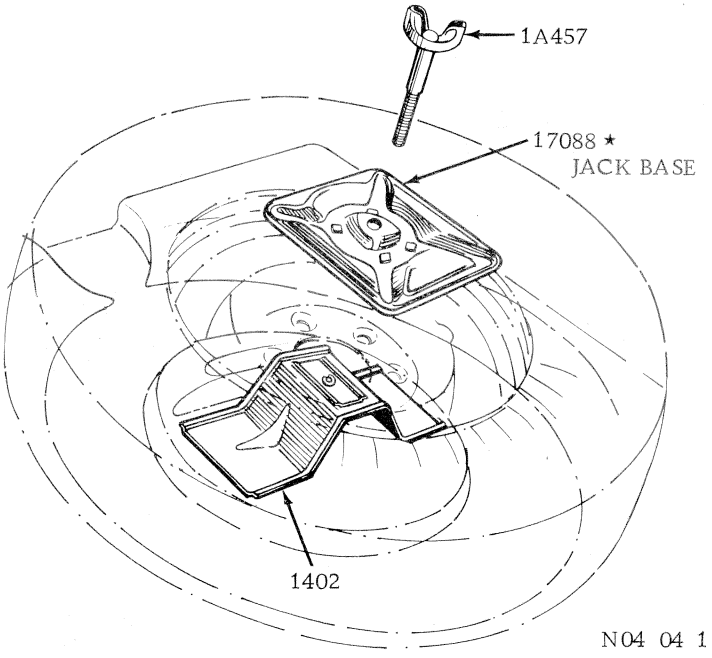

WAGON

⌀ REFER BODY SECTION

SPAREWHEEL STOWAGE

BRAKES PADS, SHOES AND LININGS

MODEL	BODY TYPE	REMARKS	UNIT	PART NUMBER		
– – 2001 – – KIT – FRONT DRUM BRAKE SHOE & LINING						
XA,ZF	All	Normal duty	1	ARC6DZ	2096	BRB
XA,ZF	All	Heavy duty	1	XB	2096	AB*
– – 2001 – – KIT – DISC BRAKE PAD						
XA,ZF	All	PBR type	1	XY	2001	A
XA,ZF	All	Girling type	1	XW	2096	AB
XB,ZG	All	Front – PBR – exc. taxi	1	PL	2001	A
XB,ZG	All	Front – Girling – exc. taxi.	1	XB	2001	A
XB,ZG	All	Front – Girling – taxi	1	XB	2001	C
XB,ZG	All	Rear	2	PL	2097	AA
– – 2007 – – KIT – REAR DRUM BRAKE LINING						
XA	All	Handling option	1	D10Z	2007	A
– – 2200 – – KIT – REAR DRUM BRAKE SHOE & LINING						
XA,ZF	54, 65, 71	All except 54H, 65H not reinforced	1	ARC6DZ	2097	BRB
– – 2018 – – SHOE & LINING ASSY. – PRIMARY FRONT/REAR BRAKE (ALSO REFER 2218)						
XA,ZF	54, 65, 71	2½" x 10" dia. brakes – front – exc. finned drums	2	XR	2018	A
XA	66, 78	2½" x 10" dia. brakes – front – finned drums	2	XR	2018	D
XA	54H, 65H, 66, 78	2½" x 10" dia. brakes – rear	2	XR	2018	D
XB	66, 78	2½" x 10" dia. brakes	2	XR	2018	D
– – 2019 – – SHOE & LINING ASSY. – SECONDARY FRONT/REAR DRUM BRAKE (ALSO REFER 2219)						
XA,ZF	54, 65, 71	2½" x 10" dia. brakes – front – exc. finned drums	2	XR	2019	A
XA	66, 78	2½" x 10" dia. brakes – front – finned drums	2	XR	2019	D
XA	54H, 65H, 66, 78	2½" x 10" dia. brakes – rear	2	XR	2019	D
XB	66, 78	2½" x 10" dia. brakes	2	XR	2019	D
– – 2218 – – SHOE & LINING ASSY. – PRIMARY REAR DRUM BRAKE (ALSO REFER 2018)						
XA,ZF	All exc. 54H, 65H, 66, 78	2" x 10" dia. brakes	2	XR	2218	A
XB,ZG	54, 65, 71	2" x 10" dia. brakes	2	XR	2218	A
XA/B	66, 78	2" x 10" dia. brakes	2	XR	2218	B
XA/B, ZF/G	54A, B, C, E, G.	2" x 10" dia. brakes – police & taxi	2	XR	2218	C
XA/B	66, 78	2" x 10" dia. brakes – police & taxi	2	XR	2218	D
– – 2219 – – SHOE & LINING ASSY. – SECONDARY REAR DRUM BRAKE (ALSO REFER 2019)						
XA,ZF	All exc 54H, 65H, 66, 78	2" x 10" dia. brakes	2	XR	2219	A
XB,ZG	54, 65, 71	2" x 10" dia. brakes	2	XR	2219	A
XA/B	66, 78	2" x 10" dia. brakes	2	XR	2219	B
XA/B, ZF/G	54A, B, C, E, G	2" x 10" dia. brakes – police & taxi	2	XR	2219	C
XA/B	66, 78	2" x 10" dia. brakes – police & taxi	2	XR	2219	D

BRAKE MASTER CYLINDER APPLICATION CHART

MODEL/ YEAR RANGE	BODY TYPE	FRONT BRAKE TYPE	PART NUMBER	REPLACED BY	PARTS LIST
XA, ZF	All	Drum	XA 2140 BA		A
XA, ZF	All exc 54H,65H	Disc	XA 2140 AB		B
XA	54H, 65H	Disc	XA 2140 CB		C
XB, ZG To 11/74	All	Boosted Disc	PL 2140 AA		D
XB, ZG From 11/74	All	Boosted Disc	PL 2140 BA		E
XB	All	Unboosted Disc	XB 2140 A		F

DESCRIPTION	PART NUMBER	BRAKE MASTER CYLINDER PARTS LIST "A TO L"											
		A	B	C	D	E	F	G	H	I	J	K	L
REPAIR KIT	**2004**												
	XA 2004 A	A											
	XA 2004 B		B	C	D	E							
	XB 2004 A						F						
ROD – PUSH	**2143**												
	XB 2143 A						F						
SPRING – RETURN	**2145**												
	XA 2145 A	A											
	XW 2145 A		B	C	D	E							
CAP – FILLER	**2162**												
	XA 2162 A	A	B	C									
	PL 2162 A				D	E							
	XB 2162 A						F						
GASKET OR DIAPHRAGM – FILLER CAP	**2167**												
	XA 2167 A	A	B	C	D	E							
SLEEVE – BRAKE MASTER CYLINDER	**2167**												
	XB 2167 A						F						
PISTON	**2172**												
Primary – not serviced	2172	A	B	C	D	E	F						
Secondary	XA 2172 A	A											
Secondary	XW 2172 B		B	C									
Secondary	PL 2172 AA				D	E							
Secondary	XB 2172 A						F						
SCREW – STOP SECONDARY PISTON	**2A172**												
	V 387853 S	A	B	C	D	E							
	XB 2A172 A						F						
RETAINER – SECONDARY PISTON	**2B172**												
	XB 2B172 A						F						
CIRCLIP	**2174**												
	XB 2174 A						F						
SPRING – PISTON RETURN	**2177**												
Secondary	XW 2177 B	A	B	C	D	E							
Secondary	XB 2177 A						F						
Differential switch	XA 2177 A	A	B	C	D	E	F						

DESCRIPTION	PART NUMBER	BRAKE MASTER CYLINDER PARTS LIST "A TO L"											
		A	B	C	D	E	F	G	H	I	J	K	L
SPRING – RETAINER	2185												
	XW 2185 A		B	C	D	E							
CLIP – FILLER CAP RETAINING	2B245												
	XA 2B245 A	A	B	C	D	E							
	XB 2B245 A						F						
PISTON – DIFFERENTIAL SWITCH	2B257												
	XA 2B257 A	A	B	C	D	E	F						
SWITCH ASSY. – DIFFERENTIAL WARNING	2B264												
	XA 2B264 A	A	B	C	D	E	F						

MODEL	BODY TYPE	REMARKS	UNIT	PART NUMBER		
– – 2A001 – – KIT – REAR BRAKE CALIPER REPAIR						
XB,ZG	All		2	PL	2A001	A*
– – 2004 – – KIT – CLUTCH MASTER CYLINDER REPAIR						
XA/B, ZF/G	All	Major	1	AR105E	2004	AP
XA/B, ZF/G	All	Minor	1	AR105E	2004	A
– – 2K004/5 – – SHIELD – FRONT BRAKE DISC						
XA/B, ZF/G	All	R.H.	1	C90Z	2K004	A
XA/B, ZF/G	All	L.H.	1	C90Z	2K005	A
– – 2005 – – BOOSTER ASSY. – BRAKE						
XA,ZF	All		1	XA	2005	AB
XB,ZG	All		1	PL	2005	AA
XA/B, ZF/G	All	Nut – 3/8 x 16 att. booster assy. to body	2	33799 S2		
XA/B, ZF/G	All	Lockwasher 3/8" att. booster to body	2	34807 S8		
– – 2K008 – – LOCK PLATE – REAR DISC BRAKE MOUNTING						
XB, ZG	All		2	PL	2K008	B
– – 2012/3 – – PLATE ASSY. – FRONT DRUM BRAKE BACKING						
XA,ZF	All	R.H.	1	ARC6DA	2012	B
XA,ZF	All	L.H.	1	ARC6DA	2013	B
XA,ZF	All	Bolt – 3/8" x 24 x 2-1/8" – att. plate assy. to spindle	2	375381 S100		
XA,ZF	All	Bolt 'T' head – 3/8" – 24 x 1.16" – plate assy. to spindle	6	AR 387254 S		
XA,ZF	All	Nut – 3/8" x 24 – att. plate assy. to spindle	8	34445 S8		
XA,ZF	All	Nut – 3/8" – 24 lock – att. plate assy. to spindle	8	55694 S36		
– – 2018 – – SHOE & LINING ASSY. – PRIMARY FRONT WHEEL BRAKE (REFER 2001)						
– – 2019 – – SHOE & LINING ASSY. – SECONDARY FRONT WHEEL BRAKE (REFER 2001)						
– – 2026 – – GASKET – FRONT DRUM BRAKE GREASE BAFFLE						
XA,ZF	All		2	C6DA	2026	B
– – 2035 – – SPRING – BRAKE SHOE RETRACTING						
XA/B, ZF/G	All	Primary – rear wheel – except police & taxi auto adjusting	2	C20A	2035	C
XA/B, ZF/G	All	Secondary – rear wheel – except police & taxi – auto adjusting	2	C20A	2035	E
XA/B, ZF/G	All	Rear wheel – police & taxi – man. adjusting	4	8A	2035	
– – 2041 – – SCREW – DRUM BRAKE ADJUSTING						
XA/B, ZF/G	All	R.H.	a/r	C20A	2041	A
XA/B, ZF/G	All	L.H.	a/r	C20A	2A103	A
XA/B, ZF/G	All	Washer – 7/16 flat	a/r	372583 S		
– – 2A041 – – PIN – BRAKE & CLUTCH MASTER CYL. LINK						
XA/B, ZF/G	All	Brake	1	XA	2A041	AA
XA/B, ZF/G	All	Clutch	1	XA	2A041	BA
– – 2042 – – LINK – BRAKE SHOE CONNECTOR						
XA/B, ZF/G	All		4/8	B7A	2042	A
– – 2044 – – GASKET – FRONT WHEEL BRAKE BACKING PLATE						
XA,ZF	All		2	C6DA	2044	A
– – 2047 – – NUT – DRUM BRAKE ADJUSTING SCREW						
XA/B, ZF/G	All	R.H.	a/r	C20A	2047	B
XA/B, ZF/G	All	L.H.	a/r	C20A	2A104	B
– – 2A047 – – HOSE – BRAKE BOOSTER TO MANIFOLD						
XA/B, ZF/G	All	6 cyl. 1V	1	XA	2A047	B
XA/B, ZF/G	All	6 cyl. 2V & 8 cyl.	1	XY	2A047	A
XA/B	54H, 65H	GTHO – booster to reservoir	1	XY	2C047	A
XA/B	54H, 65H	GTHO – reservoir to manifold	1	XA	2C047	AA
– – 2048 – – SOCKET – DRUM BRAKE ADJUSTING SCREW						
XA/B, ZF/G	All		2	C30A	2048	A

MODEL	BODY TYPE	REMARKS	UNIT	PART NUMBER		
– – 2049 – – SPRING – DRUM BRAKE ADJUSTING SCREW						
XA,ZF	All	Front wheel	2	C1SS	2049	A
XA/B, ZF/G	All	Rear wheel – except police & taxi	2	C1SS	2049	A
XA/B, ZF/G	All	Rear wheel – police & taxi	2	C0DD	2049	A
– – 2M055 – – RING SCREW – HAND BRAKE ADJUSTER						
XB,ZG	All	With rear disc brakes	2	PL	2M055	AA
– – 2P055 – – HOUSING – HAND BRAKE ADJUSTING SCREW						
XB,ZG	All	With rear disc brakes	2	PL	2P055	AA
– – 2R055 – – WASHER – HAND BRAKE ADJUSTING SCREW						
XB,ZG	All	With rear disc brakes	2	PL	2R055	AA
– – 2061/2 – – CYLINDER ASSY. – FRONT DRUM BRAKE						
XA,ZF	All	R.H. – 1-1/8" dia.	1	ARC6DA	2061	A
XA,ZF	All	L.H. – 1-1/8" dia.	1	ARC6DA	2062	A
– – 2063 – – RESERVOIR & BRACKET ASSY. – BRAKE VACUUM						
XA/B	54H, 65H	GTHO – O.N.R.	1	XA	2063	AA
– – 2066 – – CUP OR CLIP – BRAKE SHOE HOLD DOWN						
XA/B, ZF/G	All	Drum brake – cup	a/r	6H	2066	
XA/B, ZF/G	All	Disc brake – PBR type – double clip	2	XY	2066	A
XA/B, ZF/G	All	Disc brake – PBR type – single clip	2	XY	2066	B
XA,ZF	All	Disc brake – Girling type – clip	2	XW	2066	A
XB,ZG	All	Disc brake – Girling type – clip	2	XB	2066	A
– – 2B066 – – CLIP – DISC PAD HOLD DOWN PIN						
XA,ZF	All	Disc brake – Girling type – inner	4	XW	2B066	C
– – 2068 – – SPRING – BRAKE SHOE HOLD DOWN						
XA,ZF	All	Front wheel	4	H	2068	
XA/B, ZF/G	All	Rear wheel – primary except police & taxi	2	H	2068	
XA/B, ZF/G	All	Rear wheel – secondary except police & taxi	2	TDAA	2068	A
XA/B, ZF/G	All	Rear wheel – police & taxi	4	H	2068	
– – 2069 – – PIN – BRAKE SHOE HOLD DOWN						
XA,ZF	All	Front wheel	4	8A	2069	A
XA/B, ZF/G	All exc 54H, 65H, 66, 78	Rear wheel	4	8A	2069	A
XA	54H, 65H	Rear wheel	4	XA	2069	A
XA/B	66, 78	Rear wheel – 10 cwt	4	8A	2069	A
XA/B	66, 78	Rear wheel – 15 cwt	4	XA	2069	A
XA	54H, 65H	Rear wheel – GTHO	4	B7T	2069	A
– – 2073 – – BRACKET – REAR WHEEL BRAKE HOSE SUPPORT						
XA/B,	54A,B,C,D,H, 65		1	XA	2073	B
XA/B, ZF/G	54E,G, 71, 66, 78		1	XA	2073	AA
– – 2078/9 – – HOSE ASSY. – FRONT WHEEL BRAKE						
XA,ZF	All	Drum brake	2	XY	2078	A
XA/B, ZF/G	All	Disc brake – R.H.	1	XY	2078	B
XA/B, ZF/G	All	Disc brake – L.H.	1	XY	2078	C
XA/B, ZF/G	All	Bolt – 3/8" – 24 x 1.00" att. hose to caliper	2	382365 S36		
– – 2L081 – – VALVE SPACER CLUTCH MASTER CYL.						
XA/B, ZF/G	All		1	105E	2L081	A
– – 2082 – – BRACKET – FRONT WHEEL DRUM BRAKE HOSE						
XA,ZF	All		2	C60A	2082	A
XA,ZF	All	Screw – 5/16" x 18 x ½" – att. bracket to body side rail	a/r	40923 S8		
– – 2092 – – COVER – DRUM BRAKE ADJUSTING HOLE						
XA/B, ZF/G	All		a/r	8A	2092	
– – 2A094 – – KIT – DISC BRAKE SLEEVE REPAIR						
XA,ZF	All	PBR type	1	XY	2A094	A
XB,ZG	All	PBR type – exc taxi	1	XY	2A094	A
XB,ZG	All	PBR type – taxi	1	XB	2A094	A

MODEL	BODY TYPE	REMARKS	UNIT	PART NUMBER		
-- 2096/7 -- KIT – BRAKE LINING FRONT & REAR (REFER 2001)						
-- 2B099 -- BOLT – STABILIZER TO CALIPER						
XA/B, ZF/G	All	Girling type – long	4	XW	2B099	A
XA/B, ZF/G	All	Girling type – short – 5/16" O.D.	4	XW	2B099	B
XA/B, ZF/G	All	Girling type – short – ¼" O.D.	4	XW	2B099	C
-- 2A103 -- SCREW – DRUM BRAKE ADJUSTING (REFER 2041)						
-- 2A104 -- NUT – DRUM BRAKE ADJUSTING SCREW (REFER 2047)						
-- 2106 -- RETAINER – PARKING BRAKE LEVER PIN						
XA/B, ZF/G	All		2	91A	2106	
-- 2107 -- PIN – PARKING BRAKE LEVER						
XA/B, ZF/G	All		2	AJ	2107	A
-- 2B116 -- SHIELD – DISC BRAKE						
XA/B, ZF/G	All		2	C80Z	2B116	A
-- 2B118/9 -- CALIPER ASSY. – FRONT WHEEL BRAKE						
XA,ZF	All	R.H. – PBR type	1	XY	2B118	A
XA,ZF	All	R.H. – Girling type	1	XW	2B118	C
XB,ZG	All	R.H. – PBR type – exc. taxi	1	PL	2B118	A
XB,ZG	All	R.H. – PBR type – taxi	1	XB	2B118	B
XB,ZG	All	R.H. – Girling type	1	XB	2B118	A
XA,ZF	All	L.H. – PBR type	1	XY	2B119	A
XA,ZF	All	L.H. – Girling type	1	XW	2B119	D
XB,ZG	All	L.H. – PBR type – exc taxi	1	PL	2B119	A
XB,ZG	All	L.H. – PBR type – taxi	1	XB	2B119	B
XB,ZG	All	L.H. – Girling type	1	XB	2B119	A
XA/B, ZF/G	All	Screw – 7/16 – 14 x 1.32" caliper to spindle	2	382201 S100		
XA/B, ZF/G	All	Bolt & washer assy. – caliper assy. to spindle	2	382293 S100		
-- 2A125 -- SCREW – WHEEL BRAKE CYLINDER BLEED (REFER 2208)						
-- 2128/2221 -- KIT – WHEEL BRAKE CYLINDER REPAIR						
XA,ZF	All	Drum brake – front – 1-1/8" dia. piston	1	B1D	2221	A
XA,ZF	All exc 54H, 65H	Drum brake – rear – 13/16" dia. piston	1	ARC6DZ	2128	B
XA	54H, 65H	Drum brake – rear – 15/16" dia. piston	1	B2A	2128	A
XA	66, 78	Drum brake – rear – 7/8" dia. piston	1	ARC6DZ	2128	A
XA	54H, 65H	Drum brake – rear – 15/16" dia. piston – GTHO	1	C5AZ	2128	A
XB,ZG	All	Drum brake – 13/16" dia. piston – to 11/74	2	XB	2221	B
XB,ZG	All	6 cyl. – drum brake – 13/16" dia. piston – from from 11/74	2	XB	2221	B
XB,ZG	All	8 cyl. – drum brake – ¾" dia. piston – from 11/74	2	XB	2128	A*
XA/B, ZF/G	All	Disc brake – front – PBR type	2	XY	2A221	A
XA,ZF	All	Disc brake – front – Girling type	2	C80Z	2221	A
XB,ZG	All	Disc brake – front – Girling type	2	XB	2221	A
-- 2B129 -- SPACER – BRAKE & CLUTCH MASTER CYLINDER PUSH ROD						
XA/B, ZF/G	All	Brake	1	XA	2B129	AA
XA/B, ZF/G	All	Clutch	1	XA	2B129	BA
-- 2149 -- GASKET – FRONT BRAKE LINE CONNECTOR						
XA,ZF	All	Use between hose and front drum brake	2	8M	2149	
-- 2A157 -- SPRING – BRAKE BOOSTER DIAPHRAGM RETURN						
XA/B, ZF/G	All		1	XA	2A157	A
-- 2B160 -- GASKET – BRAKE SPLASH SHIELD						
XA/B, ZF/G	All		2	C8OZ	2B160	A
-- 2162 -- CAP ASSY. – CLUTCH MASTER CYLINDER						
XA/B, ZF/G	All		1	XA	2162	B
-- 2B164 -- CLIP – BRAKE PAD ANTI RATTLE						
XB,ZG	All	Girling disc brake	4	XB	2B164	A

MODEL	BODY TYPE	REMARKS	UNIT	PART NUMBER		
– – 2172 – – PISTON – CLUTCH MASTER CYLINDER						
XA/B, ZF/G	All		1	105E	2172	B
– – 2173 – – SEAL – CLUTCH MASTER CYL.						
XA/B, ZF/G	All	Primary	1	100E	2173	B
XA/B, ZF/G	All	Secondary	1	E29 FE 1		
– – 2A176/7 – – LEVER – BRAKE SHOE AUTO ADJUSTING						
XA/B, ZF/G	All	R.H.	a/r	COLL	2A176	A
XA/B, ZF/G	All	L.H.	a/r	COLL	2A177	A
– – 2B176 – – GROMMET – BRAKE SERVO CHECK VALVE						
XA/B, ZF/G	All		1	FG	2B176	B
– – 2177 – – SPRING – CLUTCH MASTER CYL.						
XA/B, ZF/G	All		1	100E	2177	A
– – 2A178 – – CABLE ASSY. – BRAKE SHOE AUTO. ADJUSTING LEVER						
XA/B, ZF/G	All		a/r	C20A	2A178	A
– – 2A179 – – GUIDE – BRAKE SHOE AUTO ADJUSTING LEVER						
XA/B, ZF/G	All		a/r	C1SS	2A179	A
– – 2180 – – BOOT – BRAKE BOOSTER PUSH ROD SEALING						
XA/B, ZF/G	All		1	FG	2180	A
– – 2182 – – VALVE STEM – CLUTCH MASTER CYLINDER						
XA/B, ZF/G	All		1	100E	2182	A
– – 2185 – – SPRING – CLUTCH MASTER CYLINDER PISTON RETAINER						
XA/B, ZF/G	All		1	100E	2185	B
– – 2A188 – – SPACER – BRAKE PEDAL						
XA/B, ZF/G	All		1	XA	2A188	AA
– – 2A191 – – GASKET – BRAKE PEDAL SUPPORT						
XB,ZG	All	From 9/74 – O.N.R.	2	XB	2A191	A
– – 2196 – – PISTON – FRONT BRAKE CYLINDER						
XA,ZF	All	Drum brake – 1-1/8" dia.	4	ARC5DA	2196	B
XA/B, ZF/G	All	Disc brake – PBR type	2	XB	2196	B
XA,ZF	All	Disc brake – Girling type	2	C80Z	2196	A
XB,ZG	All	Disc brake – Girling type	2	XB	2196	A
– – 2197 – – PISTON – REAR DRUM BRAKE CYLINDER						
XA	54H, 65H	15/16" dia.	4	XA	2197	A
XA	66, 78	7/8" dia.	4	ARC5DA	2197	E
XA/B, ZF/G	All exc 54H, 65H	13/16" dia. – to 11/74	4	ARC6DA	2197	F
XB,ZG	All	6 cyl. – 13/16" dia. – from 11/74	4	ARC6DA	2197	F
XB,ZG	All	8 cyl. – ¾" dia. – from 11/74	4	XB	2197	A*

MODEL	BODY TYPE	REMARKS	UNIT	PART NUMBER

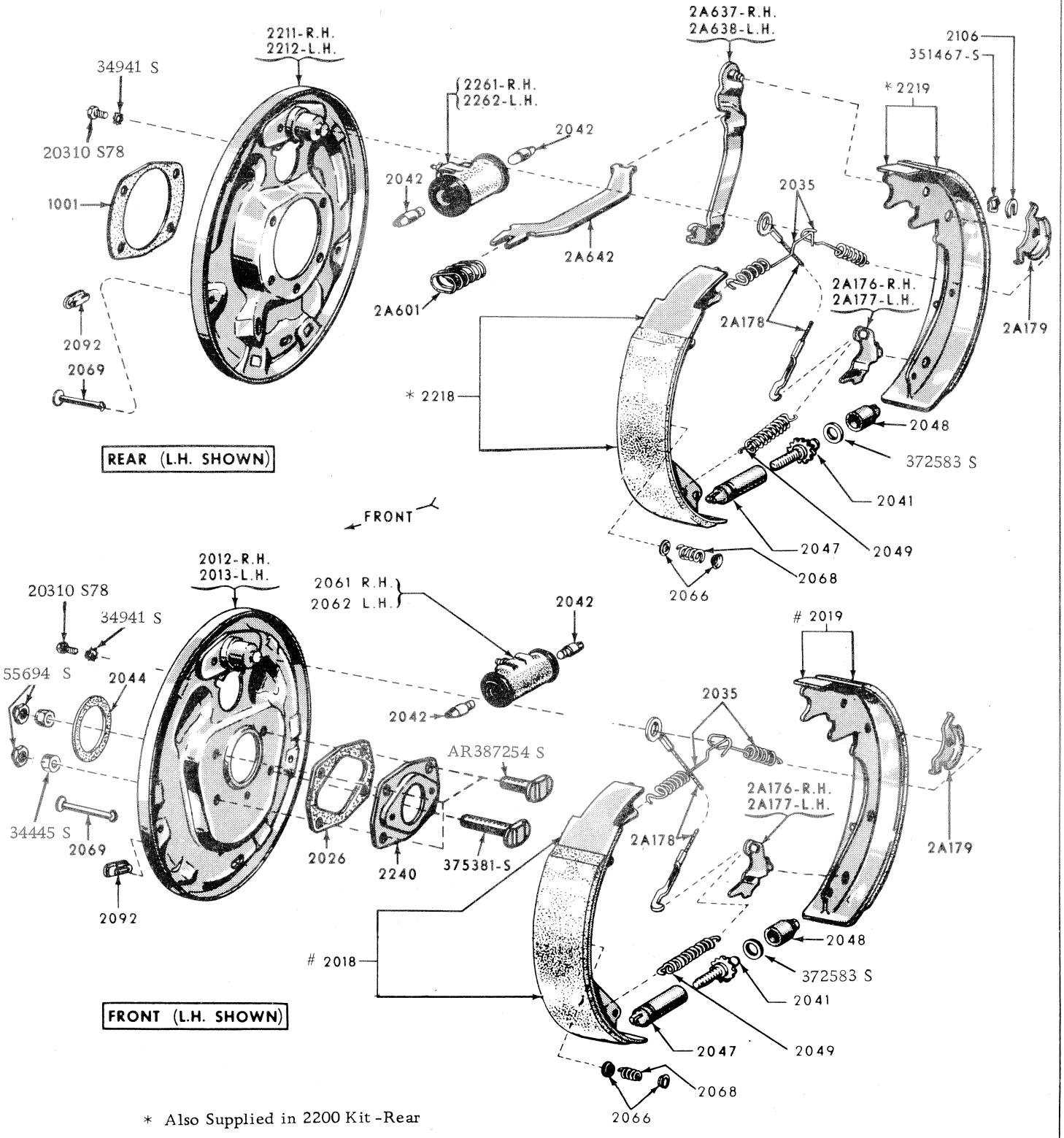

* Also Supplied in 2200 Kit -Rear

\# Also Supplied in 2001 Kit-Front

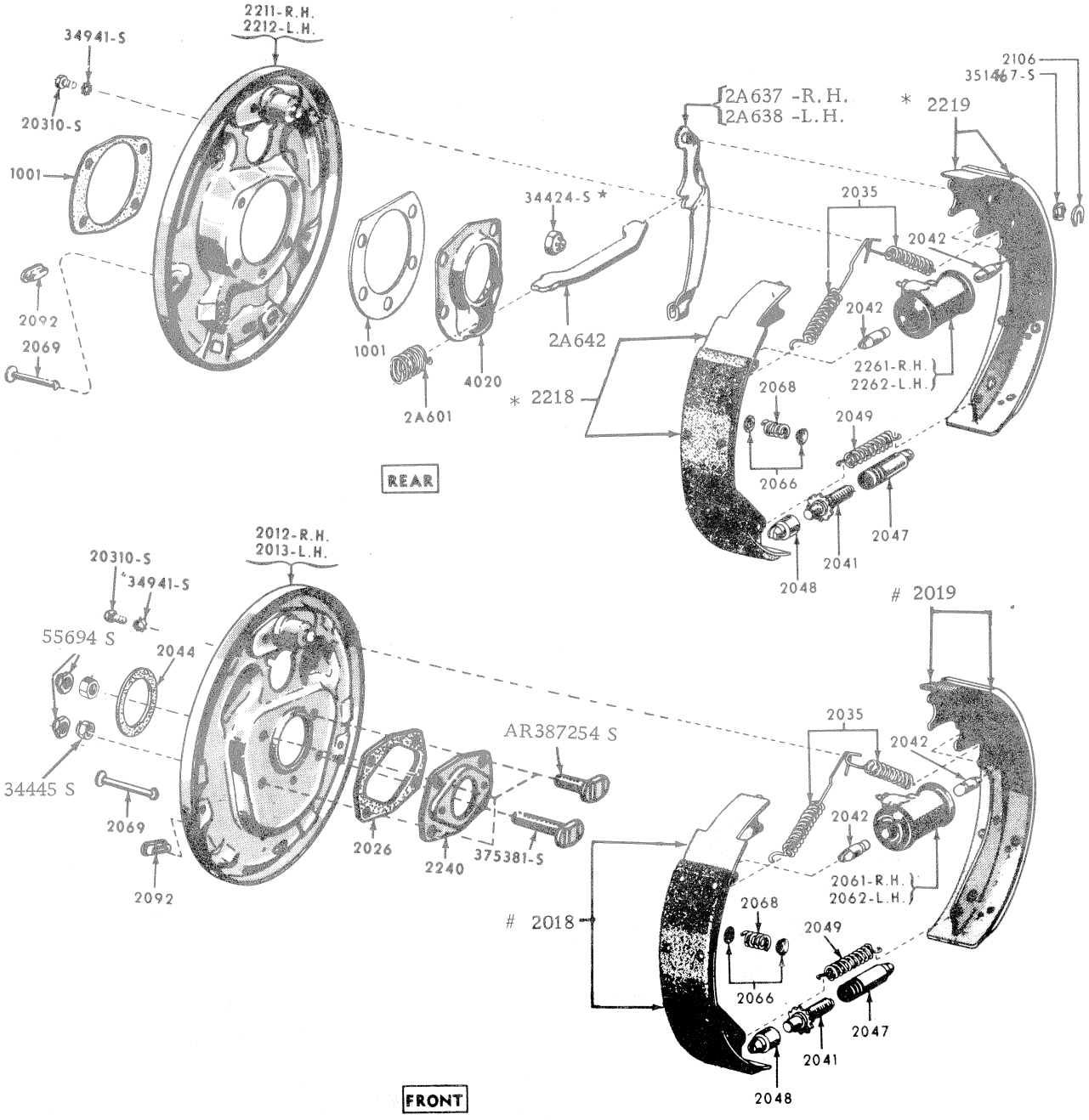

★ Not Serviced

* Also Supplied in 2200 Kit Rear

\# Also Supplied in 2001 Kit Front

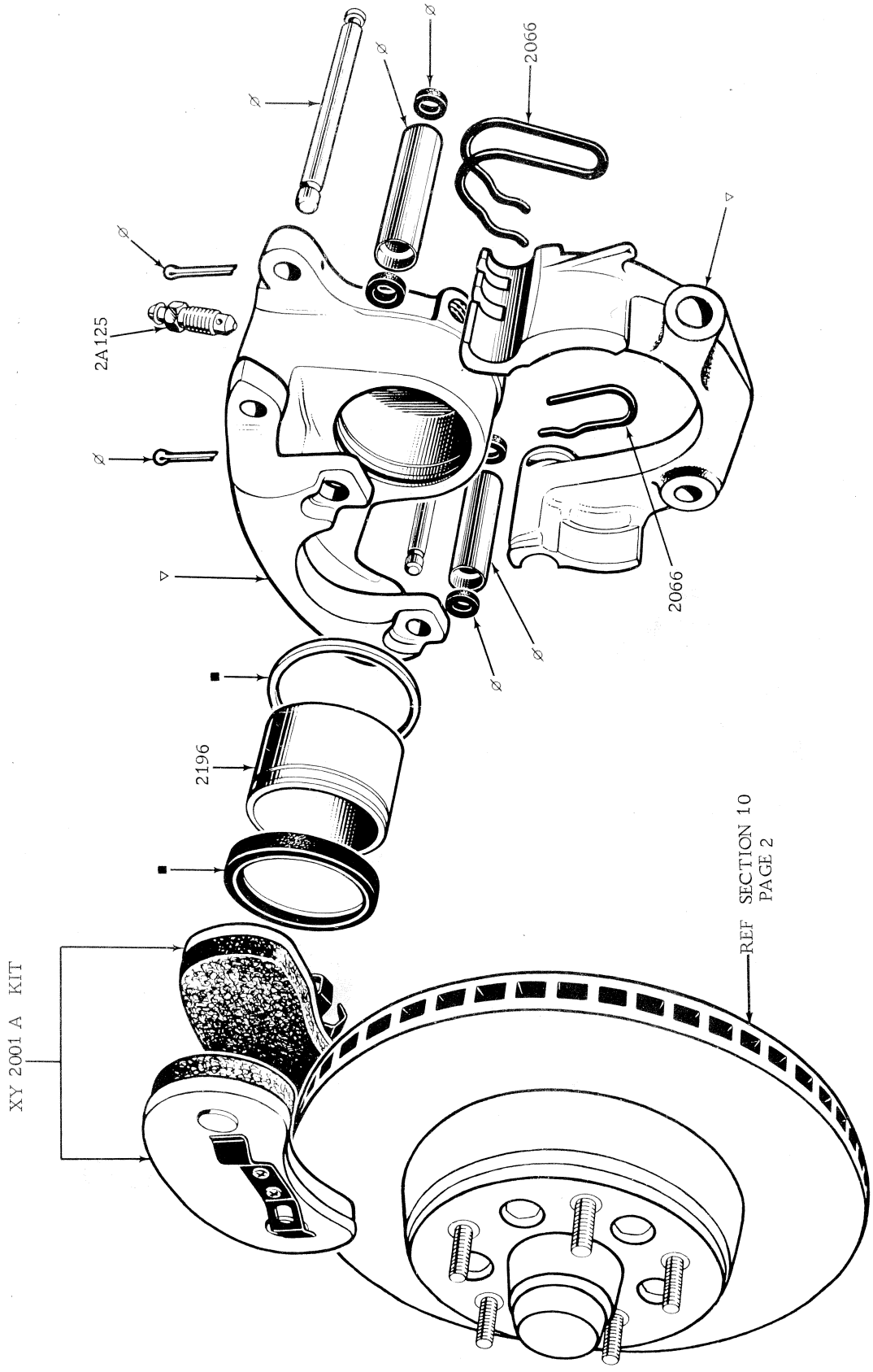

PBR TYPE

CALIPER ASSY DISC BRAKES

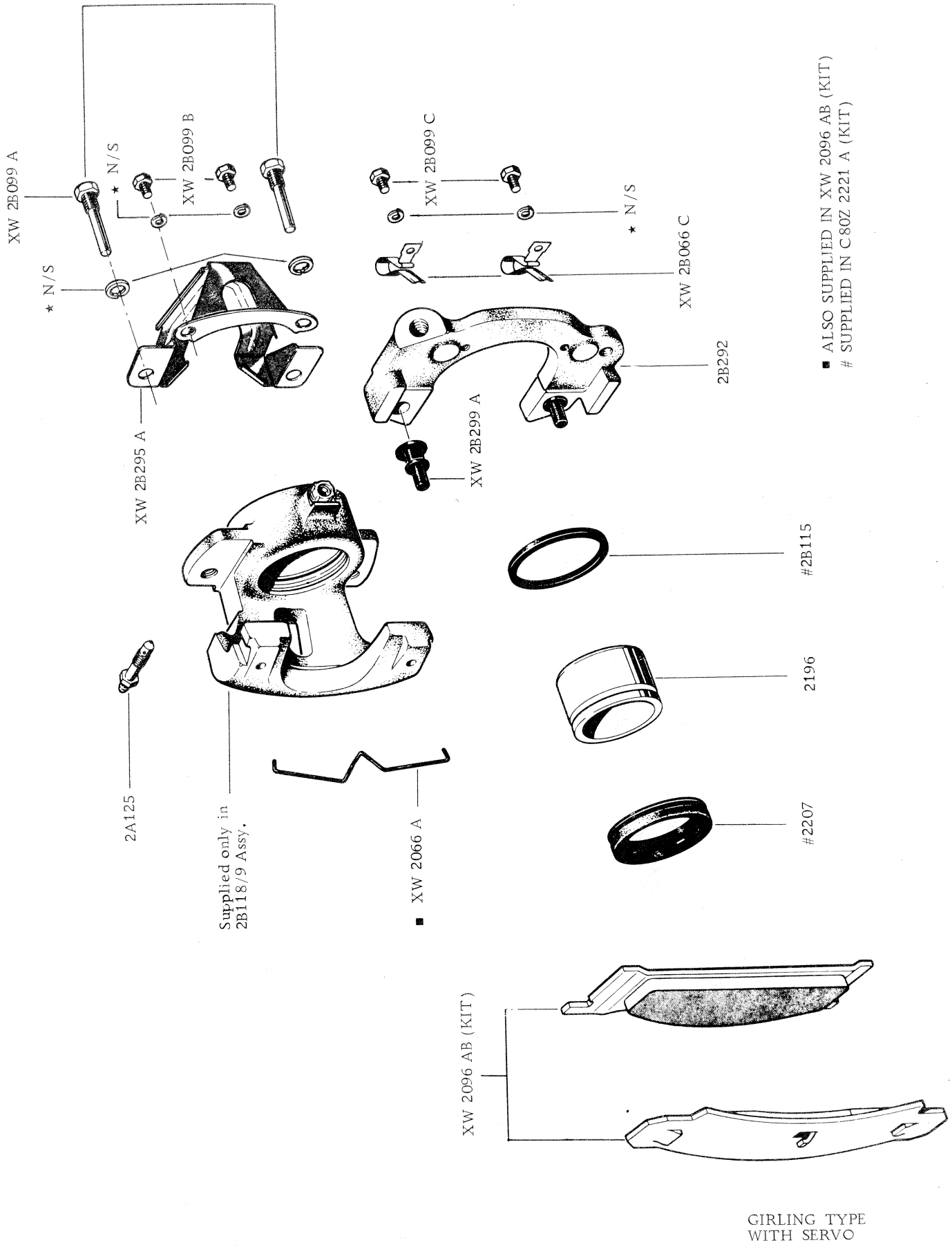

GIRLING TYPE WITH SERVO

CALIPER ASSY DISC BRAKES

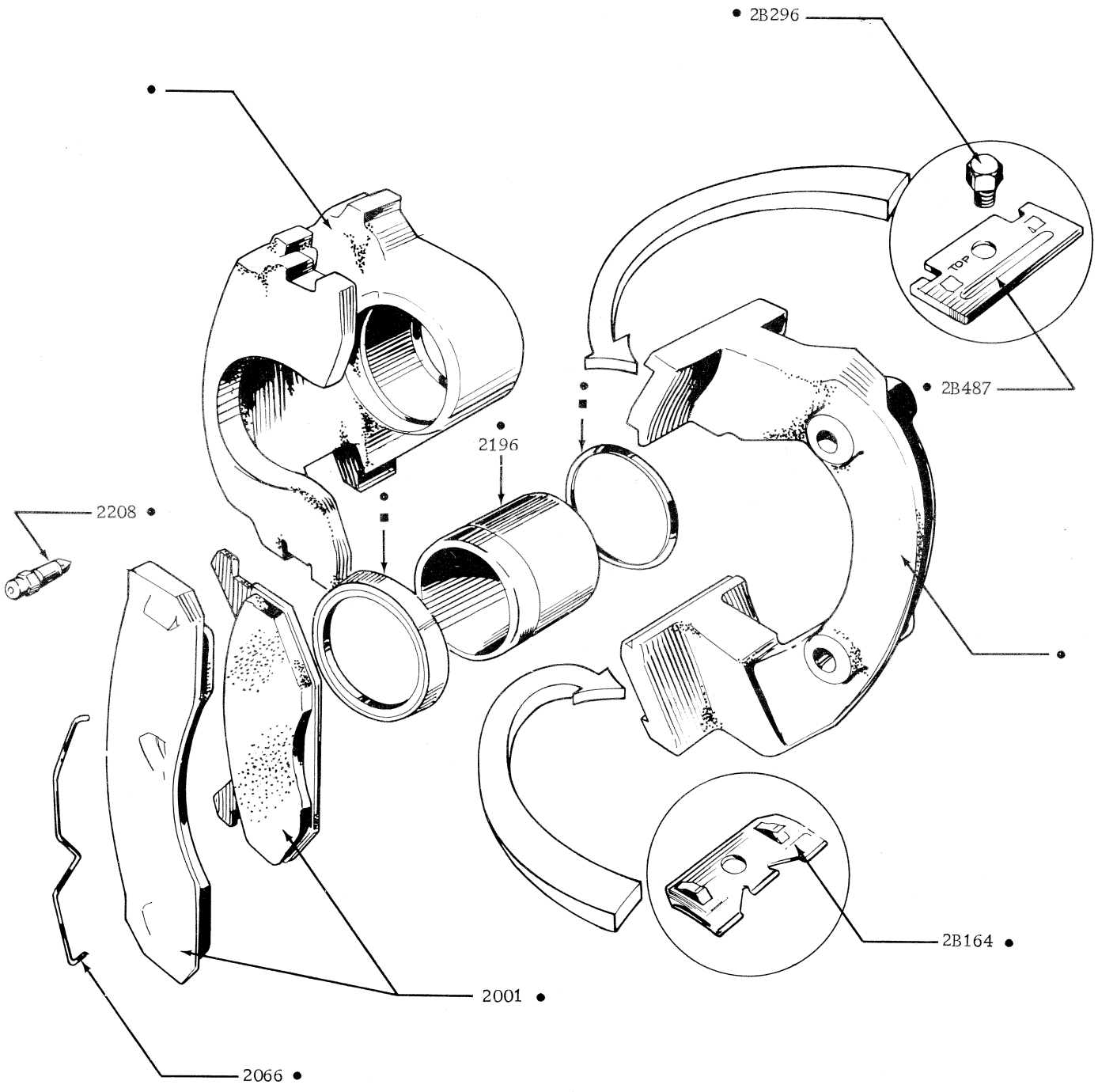

■ PART OF 2221 KIT
• PART OF 2B118/9 ASSY.

GIRLING TYPE
WITHOUT SERVO

CALIPER ASSEMBLY - FRONT DISC BRAKES

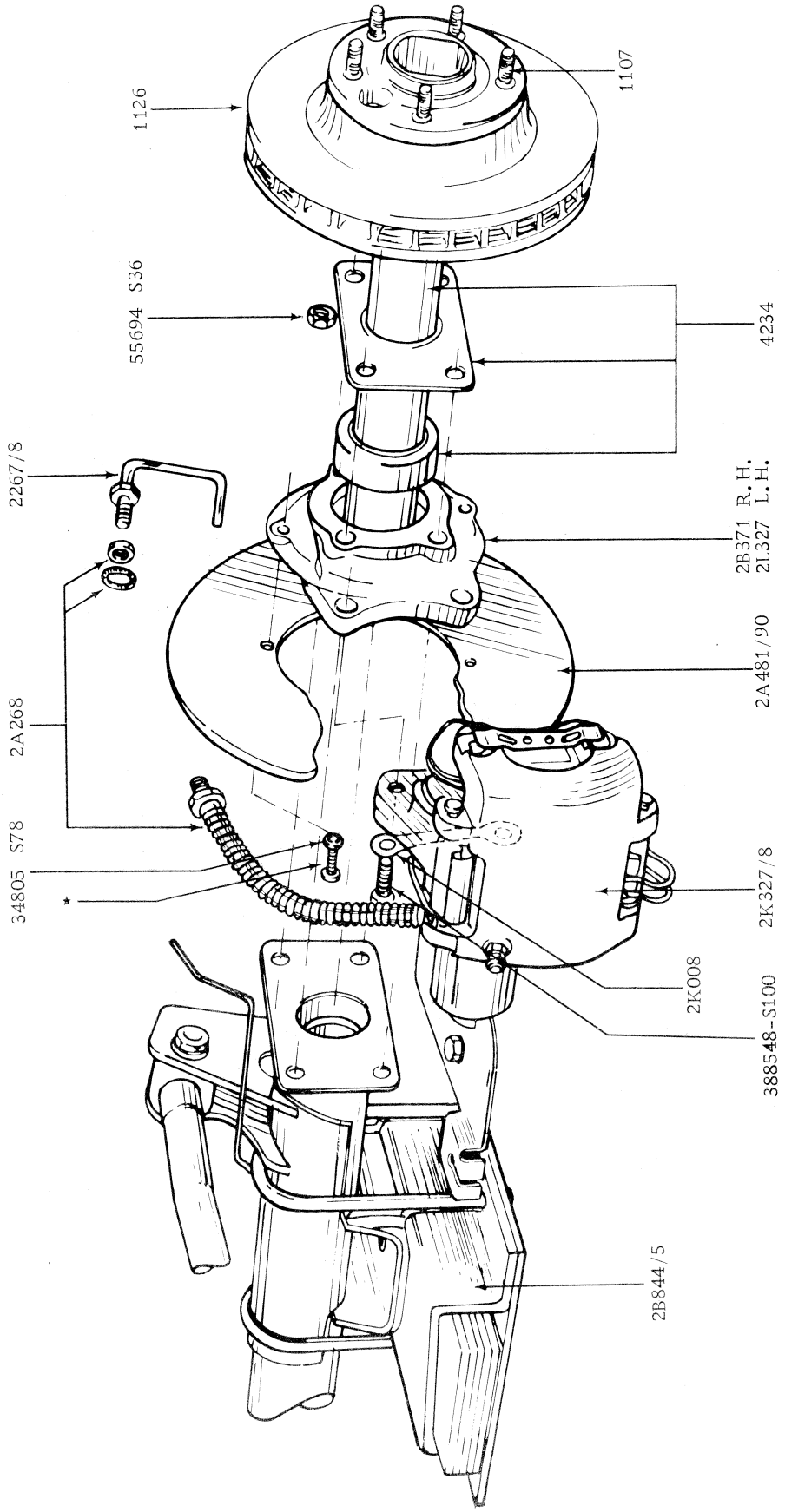

REAR BRAKE INSTALLATION - WHEN DISC BRAKES FITTED

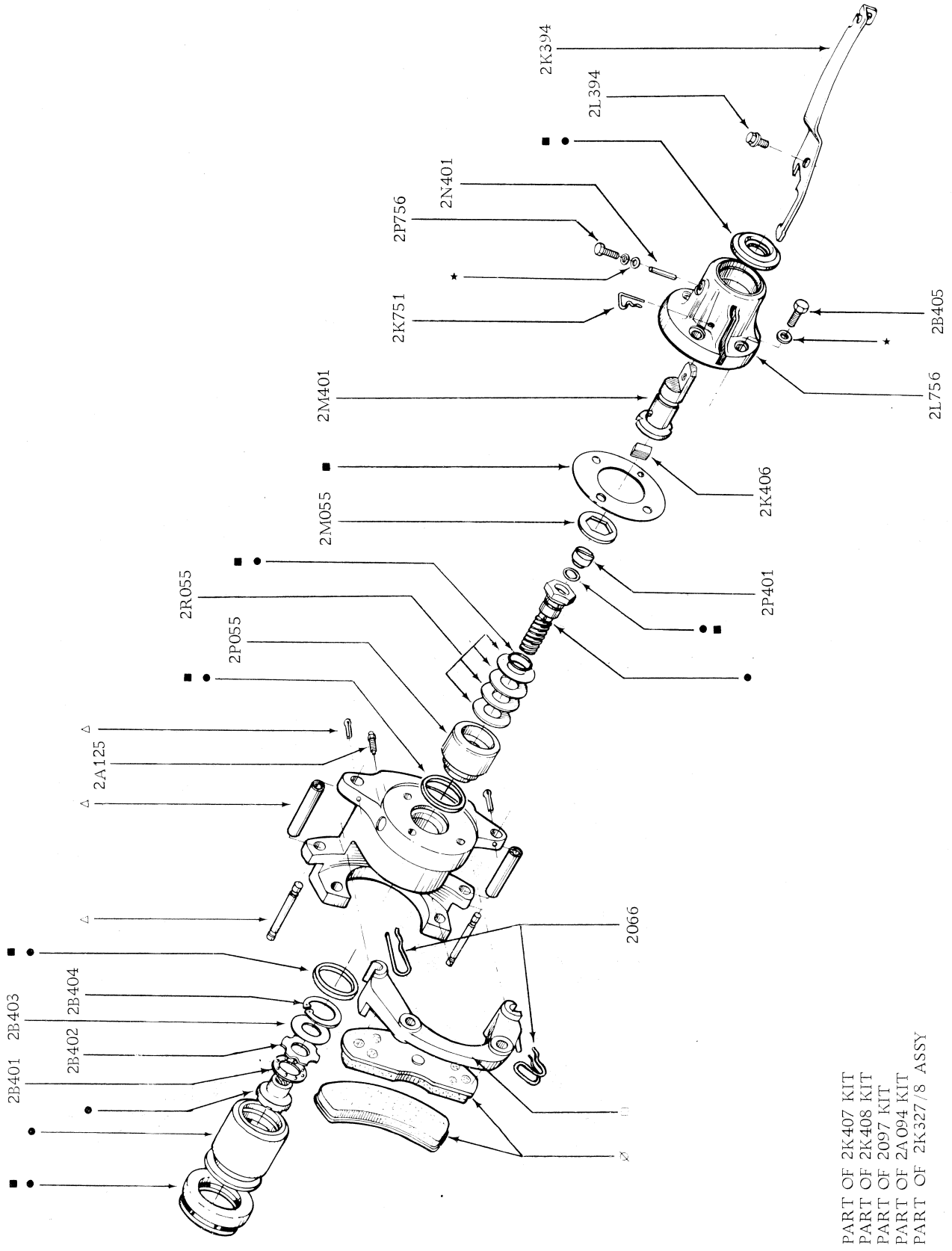

CALIPER ASSEMBLY - REAR BRAKE

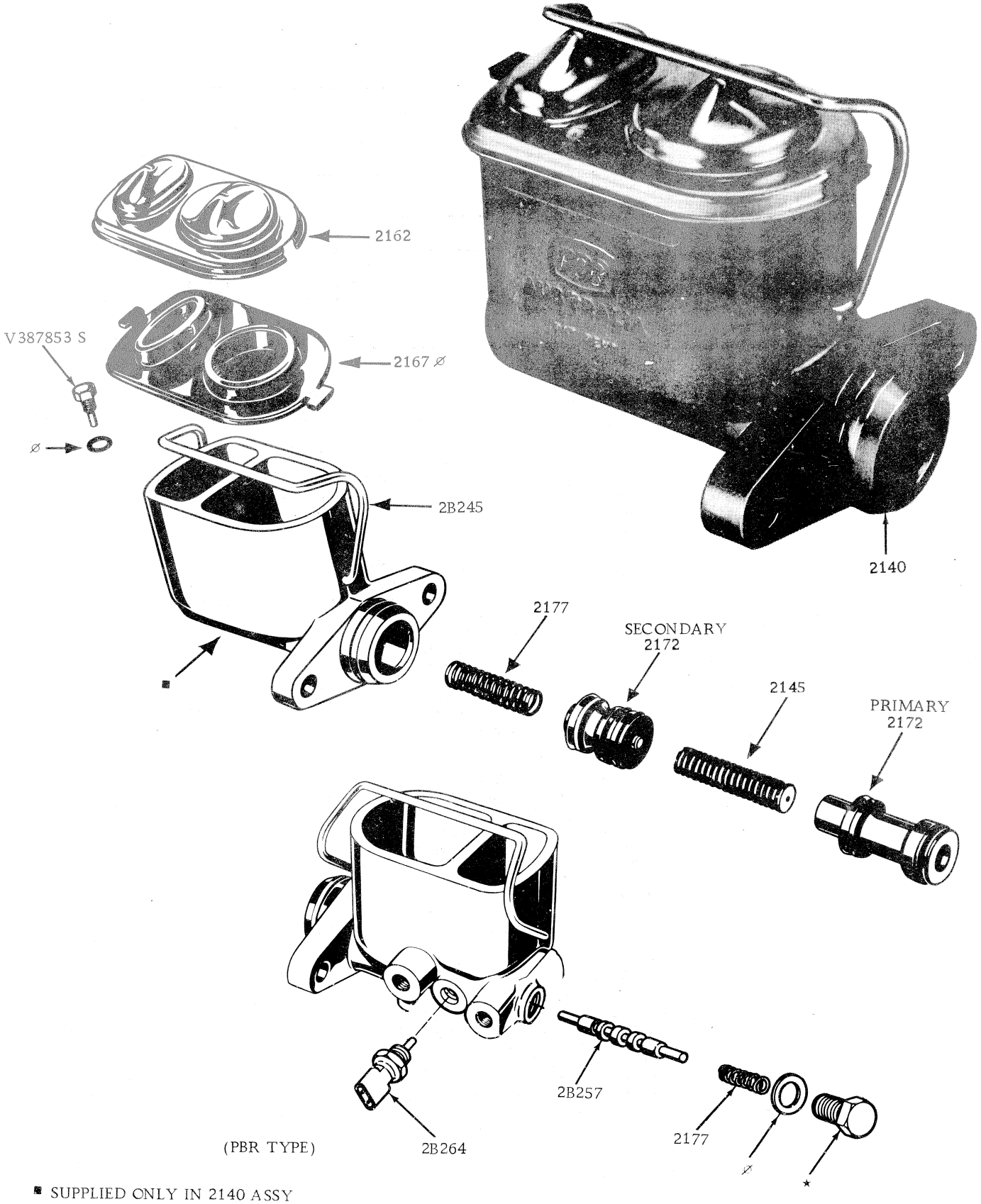

■ SUPPLIED ONLY IN 2140 ASSY
⌀ PART OF KIT 2004

BRAKE MASTER CYLINDER

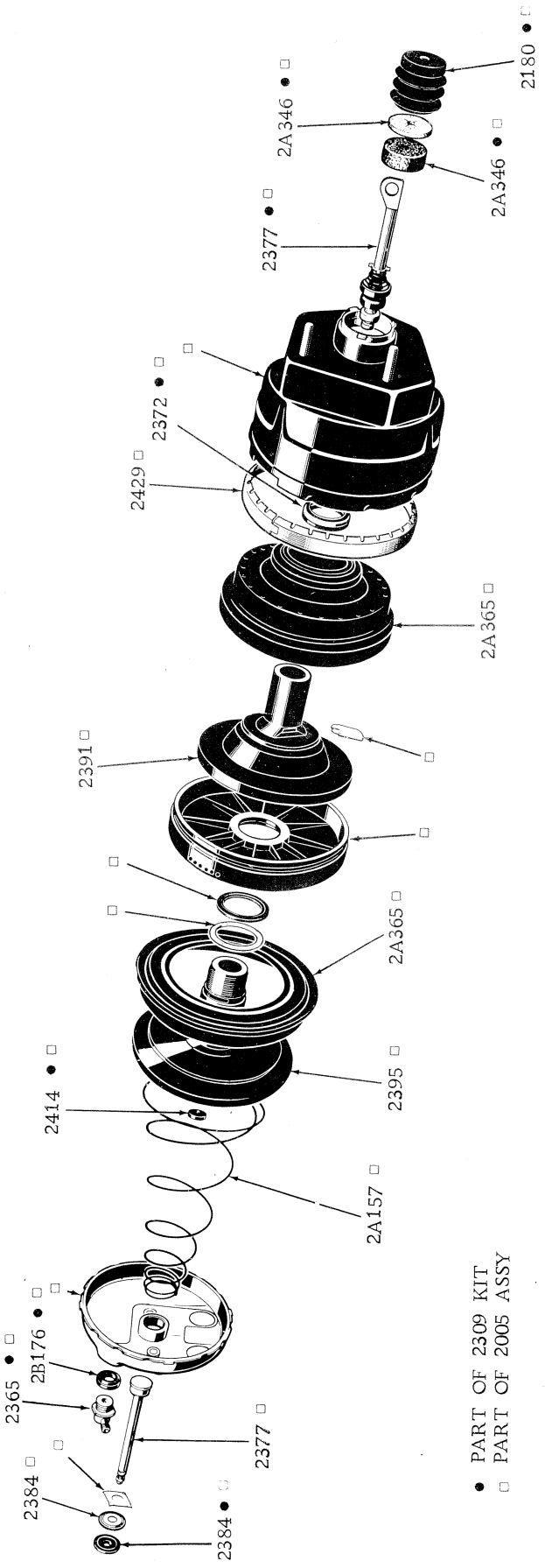

• PART OF 2309 KIT
□ PART OF 2005 ASSY

BRAKE BOOSTER

MODEL	BODY TYPE	REMARKS	UNIT	PART NUMBER		
– – 2200 – – KIT – REAR BRAKE SHOE & LINING BONDED (REFER 2001)						
– – 2201/2 – – CUP – DRUM BRAKE CYLINDER						
XA, ZF	All	Front – 1-1/8" dia. piston	4	91A	2202	
XA	54H, 65H	Rear – 15/16" dia. piston	4	8L	2201	
XA	66, 71, 78	Rear – 7/8" dia. piston	4	8A	2201	A
XA/B, ZF/G	All exc. 54H, 65H	Rear – 13/16" dia. piston – to 11/74	4	C0DD	2201	A
XB, ZG	All	6 cyl. – 13/16" dia. piston – from 11/74	4	C0DD	2201	A
XB, ZG	All	8 cyl. – ¾" dia. piston – from 11/74	4	XB	2201	A*
– – 2C201 – – EXPANDER – WHEEL CYLINDER CUP						
XA	54	Front – taxi	4	XA	2C201	AA
– – 2204/5 – – SPRING – DRUM BRAKE CYLINDER PISTON RETURN						
XA, ZF	All	Front	2	96H	2205	A
XA, ZF	All	Rear	2	C0DD	2204	A
– – 2206/7 – – BOOT – DRUM BRAKE CYLINDER						
XA/B, ZF/G	All exc. 54H, 65H		a/r	0M	2207	
XA	54H, 65H		4	96H	2206	
– – 2208 – – SCREW – WHEEL BRAKE CYLINDER BLEED						
XA/B, ZF/G	All	Drum brake	a/r	C0DD	2A125	A
XA/B, ZF/G	All	Disc brake	a/r	8M	2208	
– – 2211/2 – – PLATE ASSY. – REAR WHEEL BRAKE BACKING						
XA, ZF	All exc. 54H, 65H, 66, 78	R.H. – 2" x 10" dia. brakes	1	XA	2211	AA
XA, ZF	All exc. 54H, 65H, 66, 78	L.H. – 2" x 10" dia. brakes	1	XA	2212	BA
XA	66, 78	R.H. – 2" x 10" dia. brakes	1	XA	2211	BA
XB, ZG	All	R.H. – 2" x 10" dia. brakes	1	XA	2211	BA
XA	66, 78	L.H. – 2" x 10" dia. brakes	1	XA	2212	BA
XB, ZG	All	L.H. – 2" x 10" dia. brakes	1	XA	2212	BA
XA	54H, 65H, 66, 78	R.H. – 2½" x 10" dia. brakes	1	XA	2211	A
XB	66, 78	R.H. – 2½" x 10" dia. brakes	1	XA	2211	A
XA	54H, 65H, 66, 78	L.H. – 2½" x 10" dia. brakes	1	XA	2212	A
XB	66, 78	L.H. – 2½" x 10" dia. brakes	1	XA	2212	A
XA	54H, 65H	R.H. – 2-5/8" x 10" dia. brakes – handling option	1	C90Z	2211	A
XA	54H, 65H	L.H. – 2-5/8" x 10" dia. brakes – handling option	1	C90Z	2212	A
XA/B, ZF/G	All	6 cyl. & 302 c.i.d. – bolt 'T' head. 3/8" – 24 x 1.16" att. plate to axle	8	AR 387254 S		
XA	All	Handling option – bolt 'T' head. 3/8" – 24 x 1.16" att. plate to axle	8	AR 387254 S		
XA/B, ZF/G	All	351 c.i.d. – bolt 3/8" – 24 x 1.55" att. plate to axle	8	AR 387485 S8		
XA/B, ZF/G	All	Nut – 3/8" x 24 lock – att. brake assy. rear to axle	8	34445 S8		
XA/B, ZF/G	All	Nut – 3/8" – 24 lock – att. plate to axle	8	55694 S36		
XA	All	Handling option – washer	2	34941 S7		
XA	All	Handling option – bolt	2	20310 S78		
– – 2A213 – – SPACER – BRAKE BACKING PLATE TO REAR AXLE						
XA/B, ZF/G	All	351 c.i.d.	2	ARC70A	2A213	A
– – 2218/9 – – SHOE & LINING ASSY. – REAR WHEEL BRAKE (REFER 2001)						
– – 2221 – – KIT – BRAKE CYLINDER REPAIR (REFER 2128)						
– – 2A221 – – KIT – DISC BRAKE CALIPER HYDRAULIC REPAIR (REFER 2128)						
– – 2240 – – BAFFLE – FRONT DRUM BRAKE GREASE						
XA, ZF	All		2	C20Z	2240	A
– – 2B253 – – TUBE ASSY. – BRAKE MASTER CYLINDER REAR TO DIFFERENTIAL VALVE						
XA/B	54H, 65H		1	XA	2B253	A
– – 2256 – – GASKET – REAR BRAKE BACKING PLATE (REFER 1001)						
– – 2B257 – – DIFFERENTIAL VALVE AND PRESSURE CONTROL ASSY.						
XA/B	54H, 65H		1	D00Z	2B257	C

MODEL	BODY TYPE	REMARKS	UNIT	PART NUMBER		
– – 2261/2 – – CYLINDER ASSY. – REAR DRUM BRAKE						
XA, ZF	All exc. 54H, 65H, 66, 78	2" x 10" dia. brakes – 13/16" dia. piston	2	ARC6DA	2261	F
XA	66, 71, 78	2" x 10" dia. brakes – 7/8" dia. piston	2	ARC6DA	2261	A
XA	54H, 65H	2½" x 10" dia. brakes – 15/16" dia. piston	2	XA	2261	A
XA	66, 78	2½" x 10" dia. brakes – 7/8" dia. piston	2	XA	2261	B
XA	66, 78	2½" x 10" dia. brakes – 13/16" dia. piston	2	XA	2261	C
XA	54H, 65H	2-5/8" x 10" dia. brakes – 15/16" dia. piston – R.H. – GT HO	1	D00Z	2261	A
XA	54H, 65H	2-5/8" x 10" dia. brakes – 15/16" dia. piston – L.H. – GT HO	1	D00Z	2262	A
XB, ZG	All	2" x 10" dia. brakes – 13/16" dia. piston – to 11/74	2	XB	2261	A
XB, ZG	All	6 cyl. – 2" x 10" dia. brakes – 13/16" dia. piston – from 11/74	2	XB	2261	A
XB, ZG	All	8 cyl. – 2" x 10" dia. brakes – ¾" dia. piston – from 11/74	2	XB	2261	GA*
– – 2263/4 – – TUBE ASSY. – FRONT WHEEL BRAKE						
XA, ZF	All	R.H. – drum brakes	1	XA	2263	A
XA/B, ZF/G	All	R.H. – with boosted disc brakes	1	XA	2263	B
XB	All	R.H. – with un-boosted disc brakes	1	XB	2263	A
XA, ZF	All	L.H. – drum brakes	1	XA	2264	A
XA/B, ZF/G	All	L.H. – with boosted disc brakes	1	XA	2264	B
XB	All	L.H. – with unboosted disc brakes	1	XB	2264	A
XA/B, ZF/G	All	Clip assy. – att. tube to floor pan (5), dash (3), dash panel (1)	9	AR 387230 S100		
– – 2265 – – TUBE ASSY. – UNION TO REAR BRAKE HOSE						
XA/B	54A,B,C,D,H, 65		1	XA	2265	A
XA/B, ZF/G	54E,G, 66, 78, 71		1	XA	2265	B
XA/B, ZF/G	All	Union – to join tubes (2265) & (2A265) also (2B329) & (2A265)	1	87592 S36		
– – 2A265 – – TUBE ASSY. – MASTER CYL. TO UNION						
XA, ZF	All	Drum brakes	1	XA	2A265	A
XA/B, ZF/G	All	Boosted disc brakes	1	XA	2A265	B
XB	All	Unboosted disc brakes	1	XB	2A265	A
– – 2267/8 – – TUBE ASSY. – REAR WHEEL BRAKE						
XA/B, ZF/G	54, 65, 71	R.H. – 200/250/302 c.i.d. – single exhaust – to 8/74	1	XA	2267	A
XA/B	66, 78	R.H. – 10 cwt. – 200/250/302 c.i.d. – single exhaust – to 8/74	1	XA	2267	A
XB, ZG	54, 65, 71	R.H. – 200/250/302 c.i.d. – single exhaust – from 8/74	1	XB	2267	B
XB	66, 78	R.H. – 10 cwt. – 200/250/302 c.i.d. – single exhaust – from 8/74	1	XB	2267	B
XA/B	66, 78	R.H. – 15 cwt. – 200/250/302 c.i.d. – single exhaust – to 8/74	1	XA	2267	B
XB	66, 78	R.H. – 15 cwt. – 200/250/302 c.i.d. – single exhaust – from 8/74	1	XB	2267	C
XA/B, ZF/G	54, 65, 66, 78	R.H. – 351 c.i.d. – single exhaust – rear drum brakes – to 8/74	1	XA	2267	D
XB, ZG	54, 65, 66, 78	R.H. – 351 c.i.d. – single exhaust – rear drum brakes – from 8/74	1	XB	2267	D
XA/B	54, 65	R.H. – 302/351 c.i.d. – single exhaust – rear drum brakes – sports suspension – to 8/74	1	XA	2267	H
XB	54, 65	R.H. – 351 c.i.d. – single exhaust – rear drum brakes – sports suspension – from 8/74	1	XB	2267	E
XA/B, ZF/G	54, 65	R.H. – 302 c.i.d. – dual exhaust	1	XA	2267	C
XA/B, ZF/G	54, 65	R.H. – 351 c.i.d. 2V – dual exhaust – rear drum brakes	1	XA	2267	E
XA/B	54, 65	R.H. – 302/351 c.i.d. – dual exhaust – rear drum brakes – sports suspension	1	XA	2267	J
XA	54, 65	R.H. – 351 c.i.d. 4V – dual exhaust – rear drum brakes – to 4/73	1	XA	2267	F
XA	54, 65	R.H. – 351 c.i.d. 4V – dual exhaust – rear drum brakes – from 4/73	1	XA	2267	K
XB	54, 65	R.H. – 351 c.i.d. – single exhaust – rear disc brakes	1	PL	2267	B
XB	54, 65	R.H. – 351 c.i.d. – dual exhaust – rear disc brakes	1	XB	2267	A
XA/B, ZF/G	54, 65, 71	L.H. – 200/250/302 c.i.d. – single exhaust – to 8/74	1	XA	2268	A
XA/B	66, 78	L.H. – 10 cwt. – 200/250/302 c.i.d. – single exhaust – to 8/74	1	XA	2268	A
XB, ZG	54, 65, 71	L.H. – 200/250/302 c.i.d. – single exhaust – from 8/74	1	XB	2268	B
XB	66, 78	L.H. – 10 cwt. – 200/250/302 c.i.d. – single exhaust – from 8/74	1	XB	2268	B
XA/B	66, 78	L.H. – 15 cwt. – 200/250/302 c.i.d. – single exhaust – to 8/74	1	XA	2268	B

MODEL	BODY TYPE	REMARKS	UNIT	PART NUMBER		
– – 2267/8 – – TUBE ASSY. – REAR WHEEL BRAKE (CONTINUED)						
XB	66, 78	L.H. – 15 cwt. – 200/250/302 c.i.d. – single exhaust – from 8/74	1	XB	2268	C
XA/B, ZF/G	54, 65, 66, 78	L.H. – 351 c.i.d. – single exhaust – rear drum brakes – to 8/74	1	XA	2268	D
XB, ZG	54, 65, 66, 78	L.H. – 351 c.i.d. – single exhaust – rear drum brakes – from 8/74	1	XB	2268	D
XA/B	54, 65	L.H. – 302/351 c.i.d. – single exhaust – rear drum brakes – sports suspension – to 8/74	1	XA	2268	H
XB	54, 65	L.H. – 351 c.i.d. – single exhaust – rear drum brakes – sports suspension – from 8/74	1	XB	2268	E
XA/B, ZF/G	54, 65	L.H. – 302 c.i.d. – dual exhaust	1	XA	2268	C
XA/B, ZF/G	54, 65	L.H. – 351 c.i.d. 2V – dual exhaust – rear drum brakes	1	XA	2268	E
XA/B	54, 65	L.H. – 302/351 c.i.d. – dual exhaust – rear drum brakes – sports suspension	1	XA	2268	J
XA	54, 65	L.H. – 351 c.i.d. 4V – dual exhaust – rear drum brakes – to 4/73	1	XA	2268	F
XA	54, 65	L.H. – 351 c.i.d. 4V – dual exhaust – rear drum brakes – from 4/73	1	XA	2268	K
XB	54, 65	L.H. – 351 c.i.d. – single exhaust – rear disc brakes	1	PL	2268	B
XB	54, 65	L.H. – 351 c.i.d. – dual exhaust – rear disc brakes	1	XB	2268	A
– – 2A268 – – HOSE ASSY. – REAR BRAKE FLEXIBLE						
XB,ZG	All	With rear disc brakes	2	PL	2A268	AA
– – 2B269 – – TUBE – DIFF. VALVE PRESSURE CONTROL TO R.H. FRONT BRAKE						
XA/B	54H, 65H		1	XA	2B269	A
– – 22270 – – NUT – BRAKE PIPE TO CONNECTOR						
XA/B, ZF/G	All		8	E0A	22270	B
– – 2B292/3 – – PLATE – DISC BRAKE ANCHOR						
XA, ZF	All	R.H. – girling type	1	XW	2B292	A
XA, ZF	All	L.H. – girling type	1	XW	2A293	A
– – 2B295 – – STABILIZER – DISC BRAKES						
XA, ZF	All	Girling type	2	XW	2B295	A
– – 2B296 – – BOLT – BRAKE PAD RETAINING PLATE						
XB, ZG	All	Girling type	4	XB	2B296	A
– – 2B299 – – INSULATOR – DISC BRAKES						
XA, ZF	All	Girling type	4	XW	2B299	A
– – 2309 – – KIT – BRAKE BOOSTER REPAIR						
XA, ZF	All		1	XA	2309	A
XB, ZG	All		1	PL	2309	AA
– – 2K327/8 – – CALIPER ASSY. – REAR BRAKE						
XB, ZG	All	R.H.	1	PL	2K327	AA
XB, ZG	All	L.H.	1	PL	2K328	AA
XB, ZG	All	Bolt – 7/16" – self locking – caliper retaining	1	388548 S100		
– – 2L327 – – BRACKET – REAR DISC BRAKE MOUNTING						
XB, ZG	All	R.H.	1	PL	2B371	AA
XB, ZG	All	L.H.	1	PL	2L327	AA
XB, ZG	All	Bolt – bracket to housing – 3/8" – 24 x 1.69"	8	V 388282 S36		
XB, ZG	All	Nut – bracket to housing – 3/8" – 24	8	55694 S36		
– – 2B328 – – TUBE ASSY. – MASTER CYL. PRIMARY PORT TO DIFF. VALVE						
XA/B	54H, 65H		1	XA	2B328	A
– – 2B329 – – TUBE ASSY. – DIFF. VALVE TO UNION						
XA/B	54H, 65H		1	XA	2B329	A
– – 2A346 – – FILTER ASSY. – BRAKE BOOSTER						
XA/B, ZF/G	All		1	FG	2A346	A
– – 2A346 – – SILENCER ASSY. – BRAKE BOOSTER						
XA/B, ZF/G	All		1	FG	2A346	B
– – 2B355 – – GASKET – BRAKE MASTER CYLINDER MOUNTING ADAPTOR						
XB, ZG	All	Unboosted brakes	1	XB	2B355	A

MODEL	BODY TYPE	REMARKS	UNIT	PART NUMBER	
– – 2365 – – CHECK VALVE – BRAKE BOOSTER					
XA/B, ZF/G	All		1	XY	2005 A9
– – 2A365 – – DIAPHRAGM – BRAKE BOOSTER					
XA/B, ZF/G	All	Front	1	XA	2A365 A
XA/B, ZF/G	All	Rear	1	XA	2A365 B
– – 2B371 – – BRACKET – REAR DISC BRAKE MOUNTING (REFER 2L327)					
– – 2372 – – SEAL ASSY. – BRAKE BOOSTER REAR					
XA/B, ZF/G	All		1	FG	2372 A
– – 2377 – – PUSH ROD – BRAKE BOOSTER					
XA, ZF	All	Valve	1	XA	2377 A
XB, ZG	All	Valve	1	PL	2377 AA
XA/B, ZF/G	All	Master cyl.	1	XA	2377 B
– – 2384 – – SUPPORT – BRAKE BOOSTER PUSH ROD SEAL					
XA/B, ZF/G	All		1	FG	2384 B
– – 2384 – – SEAL – BRAKE BOOSTER PUSH ROD					
XA/B, ZF/G	All		1	FG	2384 A
– – 2391 – – BODY – BRAKE SERVO					
XA/B, ZF/G	All		1	XA	2391 A
– – 2K394 – – LEVER – PARK BRAKE OPERATING					
XB, ZG	All	R.H. – with rear disc brakes	1	PL	2K394 AA
XB, ZG	All	L.H. – with rear disc brakes	1	PL	2K394 BA
– – 2L394 – – BOLT – PARK BRAKE LEVER					
XB, ZG	All	With rear disc brakes	2	PL	2L394 AA
– – 2395 – – PLATE – BRAKE BOOSTER FRONT DIAPHRAGM					
XA/B, ZF/G	All		1	XA	2395 A

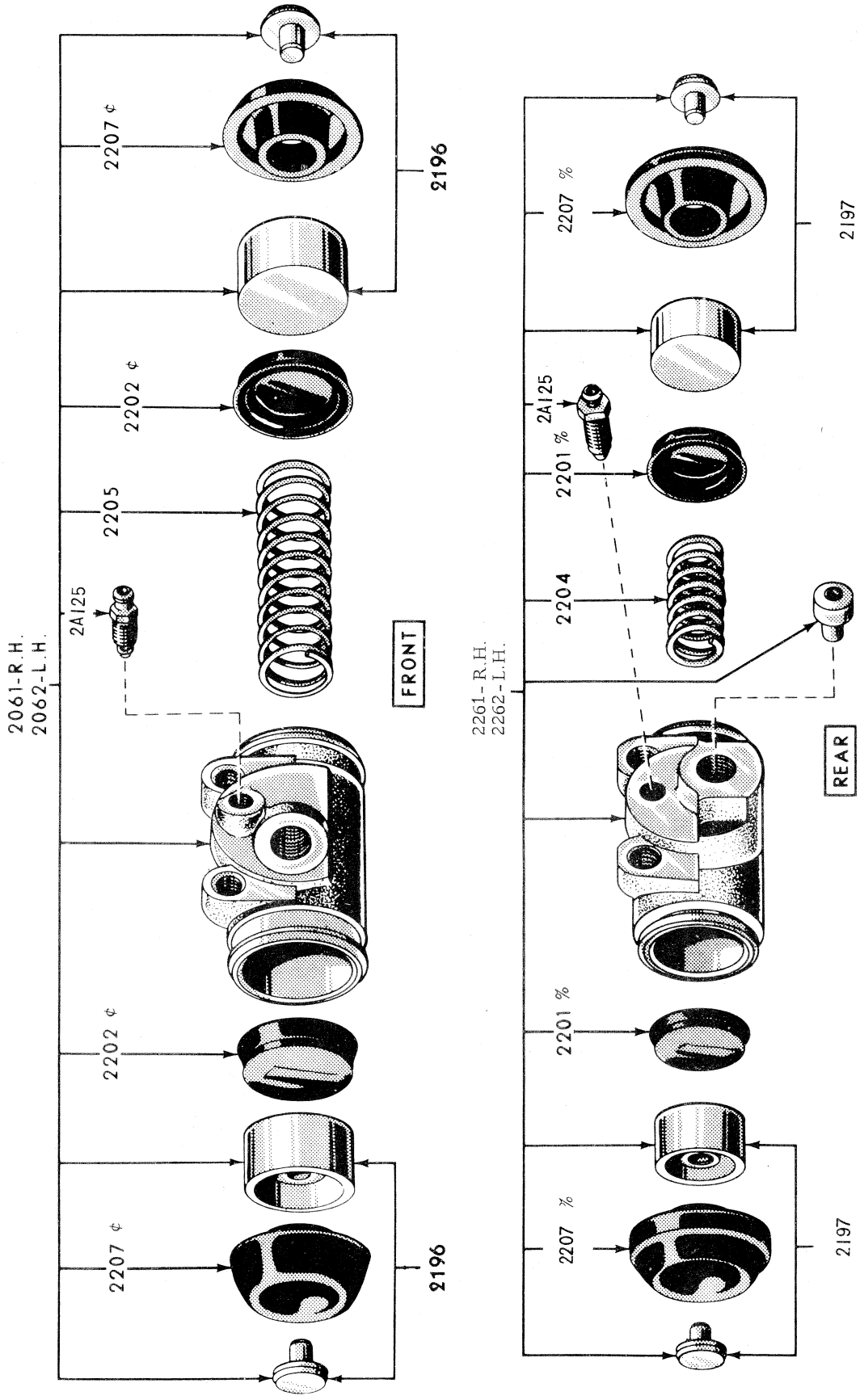

¢ ALSO INCLUDED IN KIT 2221

% ALSO INCLUDED IN KIT 2128

CYLINDER ASSY, WHEEL BRAKE

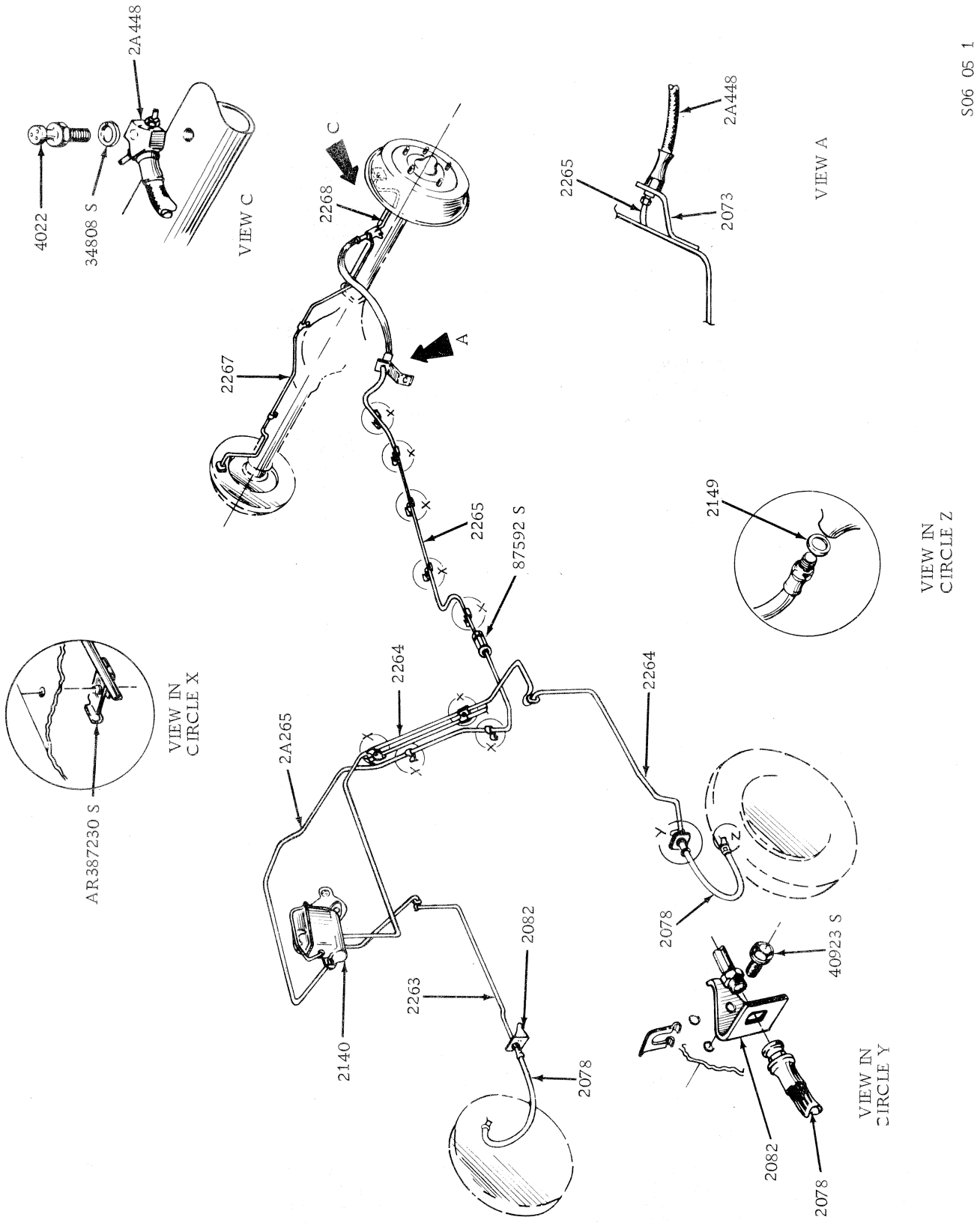

DRUM BRAKE SYSTEM

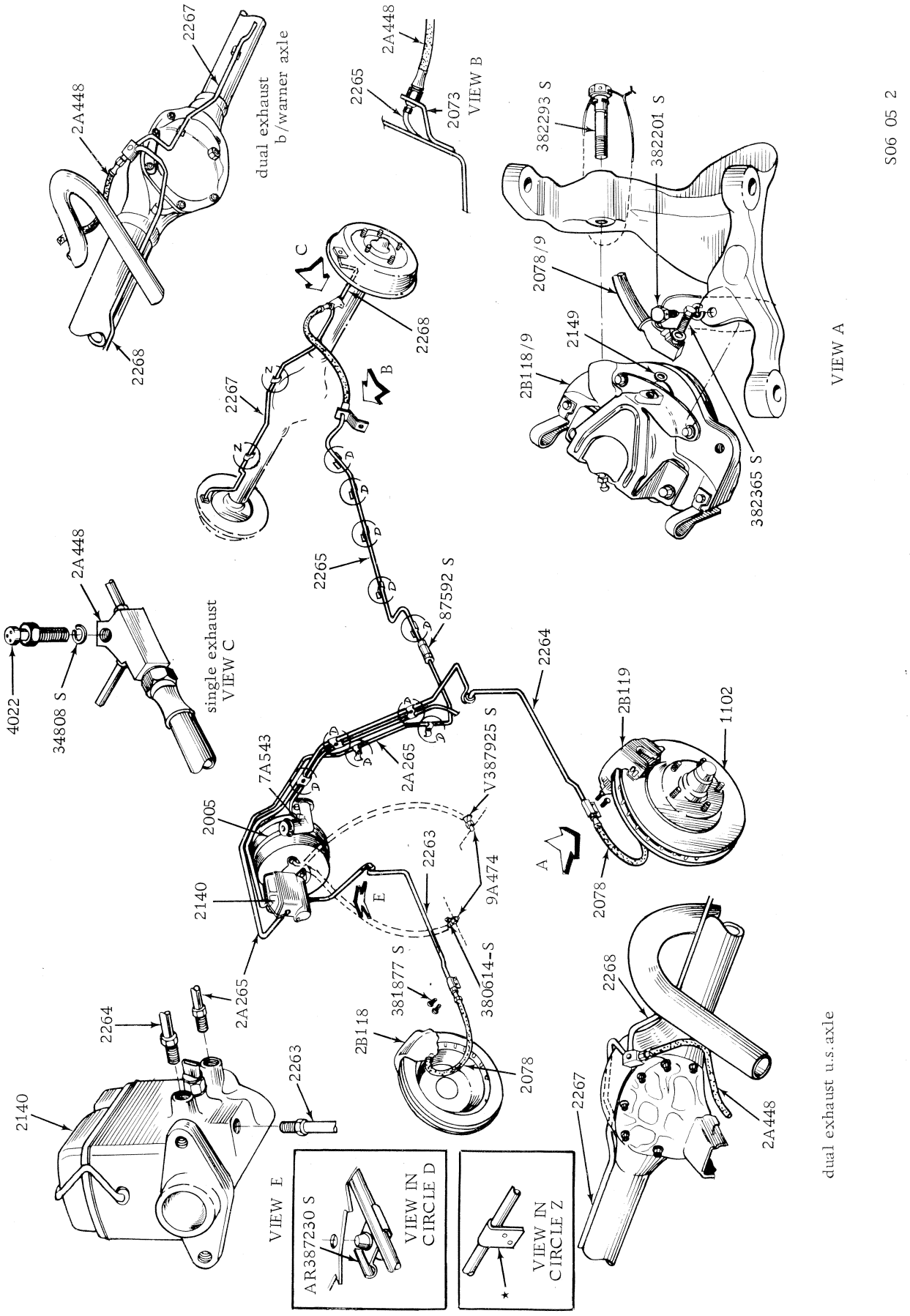

DISC BRAKE SYSTEM EXCEPT G.T.

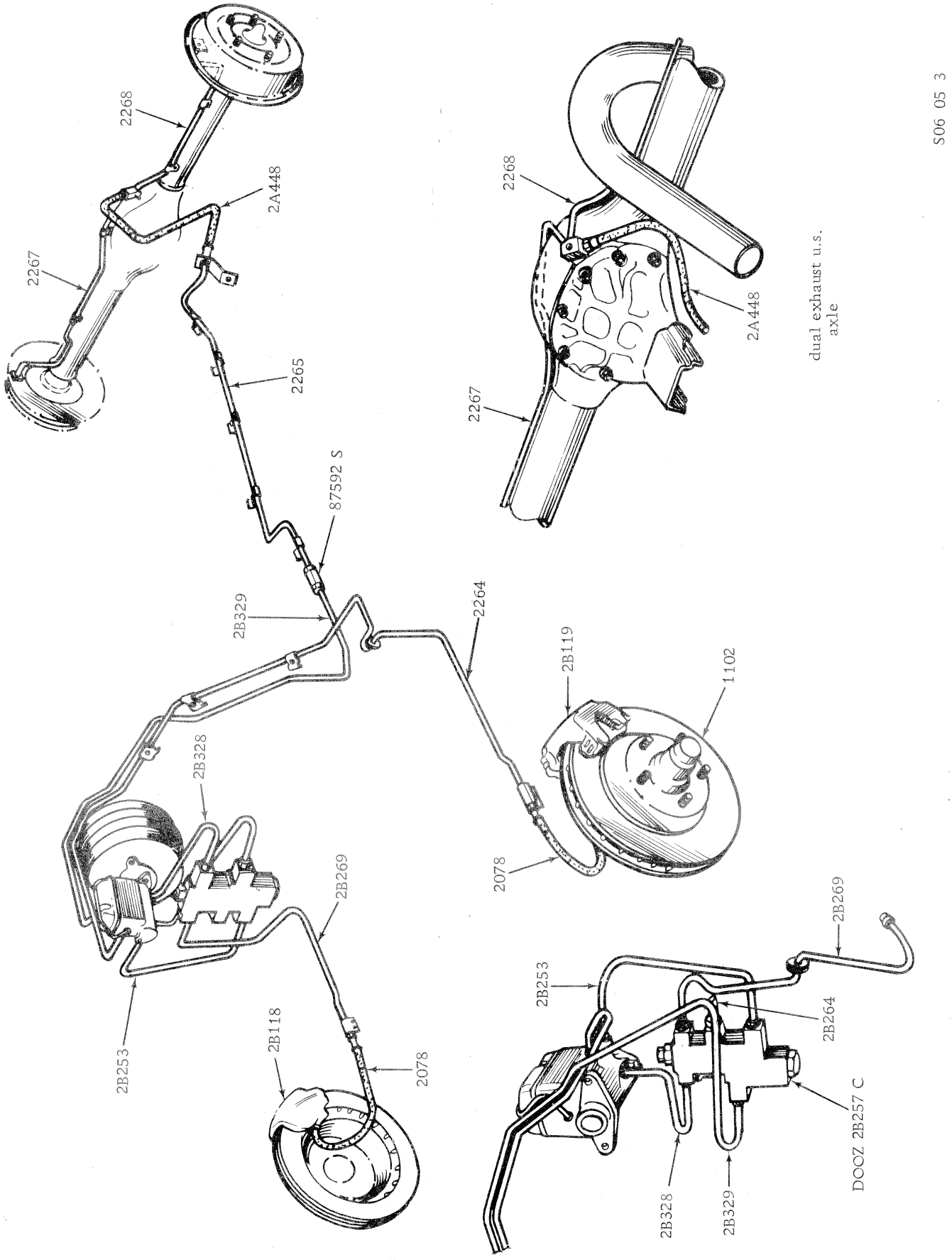

DISC BRAKE SYSTEM G.T.

MODEL	BODY TYPE	REMARKS	UNIT	PART NUMBER		
– – 2B401 – – BEARING – PARK BRAKE ADJUSTER						
XB, ZG	All	With rear disc brakes	2	PL	2B401	AA
– – 2M401 – – CAM – PARK BRAKE OPERATING						
XB, ZG	All	With rear disc brakes	2	PL	2M401	AA
– – 2N401 – – PIN – BRAKE CAM						
XB, ZG	All	With rear disc brakes	2	PL	2N401	AA
– – 2P401 – – SEAT – PARK BRAKE LINK						
XB, ZG	All	With rear disc brakes	2	PL	2P401	AA
– – 2B402 – – WASHER – PARK BRAKE ADJUSTER THRUST						
XB, ZG	All	With rear disc brakes	2	PL	2B402	AA
– – 2B403 – – WASHER – PARK BRAKE ADJUSTER – BELLEVILLE						
XB, ZG	All	With rear disc brakes	2	PL	2B403	AA
– – 2B404 – – CIRCLIP – PARK BRAKE ADJUSTER						
XB, ZG	All	With rear disc brakes	2	PL	2B404	AA
– – 2B405 – – BOLT – PARK BRAKE ADJUSTER TO CALIPER						
XB, ZG	All	With rear disc brakes	8	PL	2B405	AA
– – 2K406 – – LINK – PARK BRAKE ADJUSTER						
XB, ZG	All	With rear disc brakes	2	PL	2K406	AA
– – 2K407 – – KIT – REAR CALIPER REPAIR – MINOR						
XB, ZG	All		2	PL	2K407	AA
– – 2K408 – – KIT – REAR CALIPER REPAIR – MAJOR						
XB, ZG	All		2	PL	2K408	AA
– – 2414 – – DISC – BRAKE BOOSTER REACTION						
XA/B, ZF/G	All		1	FG	2414	A
– – 2429 – – RETAINER – BRAKE BOOSTER DIAPHRAGM						
XA/B, ZF/G	All		1	XA	2429	A
– – 2A448 – – HOSE ASSY. – REAR BRAKE FLEXIBLE (ALSO REFER 2A268)						
XA/B, ZF/G	All	With single exhaust & rear drum brakes – to 8/74	1	XA	2A448	A
XB, ZG	All	With single exhaust & rear drum brakes – from 8/74	1	XB	2A448	A*
XA/B, ZF/G	All	302 c.i.d. – with dual exhaust & rear drum brakes	1	XA	2A448	BA
XA/B, ZF/G	All	351 c.i.d. – with dual exhaust and rear drum brakes	1	XA	2A448	CA
– – 2455 – – PEDAL ASSY. – BRAKE						
XA, ZF	All	Manual trans. – drum brakes	1	XA	2455	AC
XA, ZF	All	Auto trans. – drum brakes	1	XA	2455	BC
XA/B, ZF/G	All	Man. trans. – boosted disc brakes	1	XA	2455	CC
XA/B, ZF/G	All	Auto trans. – boosted disc brakes	1	XA	2455	DC
XB, ZG	All	Man. trans. – unboosted disc brakes	1	XB	2455	A
XB, ZG	All	Auto trans. – unboosted disc brakes	1	XB	2455	B
– – 2457 – – PAD – BRAKE/CLUTCH PEDAL						
XA, ZF	All	Brake – man. trans. – drum brakes	1	C5ZZ	2457	G
XA, ZF	All	Brake – auto trans. – drum brakes	1	C60A	2457	C
XA/B, ZF/G	All	Brake – man. trans. – boosted disc brakes	1	ARC6DA	2457	A
XA/B, ZF/G	All	Brake – auto trans. – boosted disc brakes	1	ARC6DA	2457	B
XB, ZG	All	Brake – man. trans. – unboosted disc brakes	1	XB	2457	D
XB, ZG	All	Brake – auto trans. – unboosted disc brakes	1	XB	2457	B
XB, ZG	All	Brake – man. trans. – rear disc brakes	1	XB	2457	C
XB, ZG	All	Brake – auto trans. – rear disc brakes	1	XB	2457	A
XA/B, ZF/G	All	Clutch	1	ARC6DZ	2457	A
– – 2467 – – BRACKET – BRAKE & CLUTCH PEDAL SUPPORT						
XB, ZG	All	Auto trans.	1	XB	2467	A*
XB, ZG	All	200/250/351 c.i.d. – man. trans. – from 12/74	1	XB	2467	A*
– – 2471 – – BUSHING – BRAKE & CLUTCH MOUNTING BRACKET						
XA/B, ZF/G	All		2/4	B7AZ	2471	A
– – 2474 – – BUSHING – BRAKE & CLUTCH MASTER CYLINDER PUSH ROD						
XA/B, ZF/G	All		1/2	C5DZ	2474	A

MODEL	BODY TYPE	REMARKS	UNIT	PART NUMBER		
– – 2A481 – – SHIELD ASSY. – REAR BRAKE SPLASH						
XB, ZG	All	R.H.	1	PL	2A481	AA
XB, ZG	All	L.H.	1	PL	2A490	AA
– – 2B487 – – RETAINER – BRAKE PAD						
XB, ZG	All	Girling type	4	XB	2B487	A
– – 2A490 – – SHIELD ASSY. – REAR BRAKE SPLASH (REFER 2A481)						
– – 2B509 – – KIT – EXPANDER – WHEEL CYLINDER						
XA, ZF	All exc. 54H, 65H	13/16" dia. piston	2	XA	2B509	A
XA	54H, 65H	15/16" dia. piston	2	XA	2B509	B
XA	66, 71, 78	7/8" dia. piston	2	XA	2B509	C
XA, ZF	All exc. 54H, 65H	1-1/8" dia. piston	2	XA	2B509	D
XB, ZG	All	13/16" dia. piston – to 11/74	2	XB	2B509	A
XB, ZG	All	6 cyl. – 13/16" dia. piston – from 11/74	2	XB	2B509	A
XB, ZG	All	8 cyl. – ¾" dia. piston – from 11/74	2	XB	2B509	B*
– – 2519 – – BRACKET – PARKING BRAKE CABLE SUPPORT						
XA, ZF	All		2	ARC6DB	2519	B
XB, ZG	All	With rear drum brakes	2	ARC6DB	2519	B
XB, ZG	All	With rear disc brakes	2	PL	2519	AA
– – 2A601 – – SPRING – PARKING BRAKE LINK ANTI RATTLE						
XA/B, ZF/G	All	Drum brakes	2	C20A	2A601	A
– – 2A602 – – EQUALIZER – PARKING BRAKE CABLE						
XA, ZF	All exc. 54H, 65H, 66, 78		1	C60Z	2A602	A
XA	54H, 65H, 66, 78		1	XA	2A602	A
XB, ZG	All	With rear drum brakes	1	C60Z	2A602	A
XB, ZG	All	With rear disc brakes	1	XA	2A602	A
XA/B, ZF/G	All	Nut – 5/16" – 12. hex. att. equalizer to rod	1	33798 S78		
XA/B, ZF/G	All	Nut – 5/16" – 24 lock att. equalizer to rod	1	55672 S78		
– – 2A604 – – CABLE ASSY. – PARKING BRAKE REAR						
XA	54A-D, 65B,D		1	XA	2A604	AA
XA	54H, 65H	To 7/72	1	XA	2A604	AA
XA	54H, 65H	From 7/72	2	XA	2A604	C
XA, ZF	54E,G, 71		1	XA	2A604	BA
XA	66, 78	To 7/72	1	XA	2A604	BA
XA	66, 78	From 7/72	2	XA	2A604	D
XB, ZG	All	With rear drum brakes	1	XA	2A604	AA
XB, ZG	All	With rear disc brakes	2	PL	2A604	AA
XA/B, ZF/G	All	Spring – 7/16" retainer att. cable assy. to underbody	2	74277 S		
– – 2A606 – – LEVER ASSY. – PARKING BRAKE EQUALIZER						
XA/B, ZF/G	All	With rear drum brakes	1	XY	2A606	AB
XB, ZG	All	With rear disc brakes	1	XB	2A606	A
XB, ZG	All	Self locking pin – lever & cable retaining	a/r	352358 S7		
– – 2628 – – ROD – PARKING BRAKE EQUALIZER						
XA/B, ZF/G	All	With rear drum brakes	1	XW	2628	A
– – 2A631 – – BRACKET – PARK BRAKE EQUALIZER						
XA/B, ZF/G	All		1	XA	2A631	A
– – 2A637/8 – – LEVER ASSY. – PARKING BRAKE OPERATING						
XA/B, ZF/G	All	R.H.	1	C20A	2A637	A
XA/B, ZF/G	All	L.H.	1	C20A	2A638	A
XA	54H, 65H	R.H. – GT HO	1	C9ZZ	2A637	A
XA	54H, 65H	L.H. – GT HO	1	C9ZZ	2A638	A
XB, ZG	All	Washer – spring – lever retaining – from 11/74	2	351467 S7*		
– – 2A642 – – LINK – PARKING BRAKE						
XA/B, ZF/G	All exc. 54H, 65H, 66, 78		2	ARC4DA	2A642	A
XA/B	54H, 65H		1	XA	2A642	A
XA/B	66, 78	10 cwt.	2	ARC4DA	2A642	A
XA/B	66, 78	15 cwt.	1	XA	2A642	A
XA	54H, 65H	GT HO	2	C20Z	2A642	A

MODEL	BODY TYPE	REMARKS	UNIT	PART NUMBER		
– – 2A651 – – SPRING – PARKING BRAKE EQUALIZER LEVER RETRACTING						
XA/B, ZF/G	All	With rear drum brakes	1	XY	2A651	A
XB, ZG	All	With rear disc brakes	1	XB	2A651	A
– – 2K751 – – SPRING – PARK BRAKE LEVER RETURN						
XB, ZG	All	With rear disc brakes	2	PL	2K751	AA
– – 2L756 – – HOUSING – PARK BRAKE CAM AND LEVER						
XB, ZG	All	R.H. – with rear disc brakes	1	PL	2L756	AA
XB, ZG	All	L.H. – with rear disc brakes	1	PL	2L756	BA
– – 2P756 – – SET SCREW – ADJUSTER SCREW LOCATING						
XB, ZG	All	With rear disc brakes	2	PL	2P756	AA
– – 2780 – – CONTROL ASSY. – PARKING BRAKE						
XA/B, ZF/G	All	Exc. taxi	1	XA	2780	AA
XA/B, ZF/G	All	Taxi	1	XA	2780	BA
– – 2782 – – HANDLE – PARKING BRAKE						
XA/B, ZF/G	All	Exc. taxi	1	XA	2782	AA
XA/B, ZF/G	All	Taxi	1	XA	2782	BA
– – 2A790 – – CONNECTOR – PARKING BRAKE CABLE						
XA/B	54H, 65H, 66, 78		2	XA	2A790	A
– – 2804 – – PULLEY ASSY. – PARKING BRAKE CABLE						
XA/B, ZF/G	All		1	XY	2804	A
– – 2A804 – – RETAINER – PARKING BRAKE CABLE						
XA/B, ZF/G	All		1	ARC8DA	2A804	A
– – 2A808 – – IDLER – PARKING BRAKE REAR CABLE						
XA/B, ZF/G	All	With rear drum brakes	1	XY	2A808	A
XB, ZG	All	With rear disc brakes	1	XB	2A808	A
– – 2814 – – CLIP – PARKING BRAKE						
XA/B, ZF/G	All		3	78	2814	A
– – 2A815 – – CABLE ASSY. – PARKING BRAKE INTERMEDIATE						
XA/B	66, 78	With rear drum brakes	1	XA	2A815	B
XB	All	With rear disc brakes	1	XB	2A815	A
ZG	All	With rear disc brakes	1	XB	2A815	B
– – 2B844/5 – – BRACKET ASSY. – PARK BRAKE CABLE REAR SUPPORT						
XB, ZG	All	R.H. – with rear disc brakes	1	PL	2B844	AA
XB, ZG	All	L.H. – with rear disc brakes	1	PL	2B845	AA
– – 2848 – – HOUSING ASSY. – PARKING BRAKE CONTROL MOUNTING						
XA/B, ZF/G	All		1	XA	2848	AA
– – 2A850 – – SPACER – PARKING BRAKE MOUNTING BRACKET						
XA/B, ZF/G	All	Taxi	1	XA	2A850	AA
– – 2853 – – CABLE & CONDUIT ASSY. – PARKING BRAKE						
XA, ZF	All	To 12/72	1	XA	2853	AA
XA/B, ZF/G	All	With rear drum brakes – from 12/72	1	XA	2853	BA
XB, ZG	All	With rear disc brakes	1	XB	2853	A
XA/B, ZF/G	All	Spring 7/16" retaining att. cable & conduit assy. to bracket	1	74277 S		
XA/B, ZF/G	All	Pin – self locking, att. front cable clevis to lever assy.	1	116425 ES8		
XA/B, ZF/G	All	Pin – clevis. att. cable assy. to lever assy.	1	130805 ES8		
– – 22854 – – BRACKET – PARKING BRAKE CABLE TO DASH						
XA/B, ZF/G	All		1	XW	22854	A
XA/B, ZF/G	All	Screw – bracket to dash panel	2	31498 S2		
– – 2882 – – BRACKET – COMPRESSOR MOUNTING						
XA/B, ZF/G	All	6 cyl.	1	XA	2882	AA
XA/B, ZF/G	All	8 cyl.	1	D0ZZ	2882	B
XA/B, ZF/G	All	Stud – 7/16" – 14 x 2.12" att. bracket to cyl. head – O.N.R.	3	377279 S2		

MODEL	BODY TYPE	REMARKS	UNIT	PART NUMBER		
– – 2884 – – CLUTCH & PULLEY ASSY. – COMPRESSOR						
XA/B, ZF/G	All	6 cyl.	1	YB 34		
XA/B, ZF/G	All	8 cyl. – to 6/74	1	C9AZ	2884	H
XB, ZG	All	8 cyl. – from 6/74	1	YB 163*		
XA/B, ZF/G	All	Bolt – 5/16" – 24 x .75" att. clutch & pulley assy. to compressor	1	378741 S2		
– – 2888 – – BRACE ASSY. – COMPRESSOR LATERAL						
XA/B, ZF/G	All	8 cyl.	1	D1ZZ	2888	A
XA/B, ZF/G	All	Screw – att. brace to compressor	a/r	381649 S2		
– – 2889 – – BRACE ASSY. – COMPRESSOR LATERAL						
XA/B, ZF/G	All	6 cyl.	1	XY	2889	B
XA/B, ZF/G	All	Bolt 3/8" – 16 x .75" brace to eng. block	1	20348 S2		
XA/B, ZF/G	All	Lockwasher 3/8" – brace to eng. block – O.N.R.	1	34827 GS40		
– – 2A981 – – RELAY – CLUTCH COMPRESSOR						
XA/B, ZF/G	All		1	XA	2A981	A
– – 2987 – – FIELD ASSY. – COMPRESSOR CLUTCH						
XA/B, ZF/G	All		1	YB 20		
XA/B, ZF/G	All	Screw ¼" – 20 x .38" att. field assy. to compressor	4	378859 S2		
– – 2990 – – BEARING – AIR CONDITIONER CLUTCH CYLINDER						
XA/B, ZF/G	All		1	YP 20		
– – 2995 – – HEAD – AIR CONDITIONER COMPRESSOR CYLINDER						
XA/B, ZF/G	All		1	D0AZ	2995	B

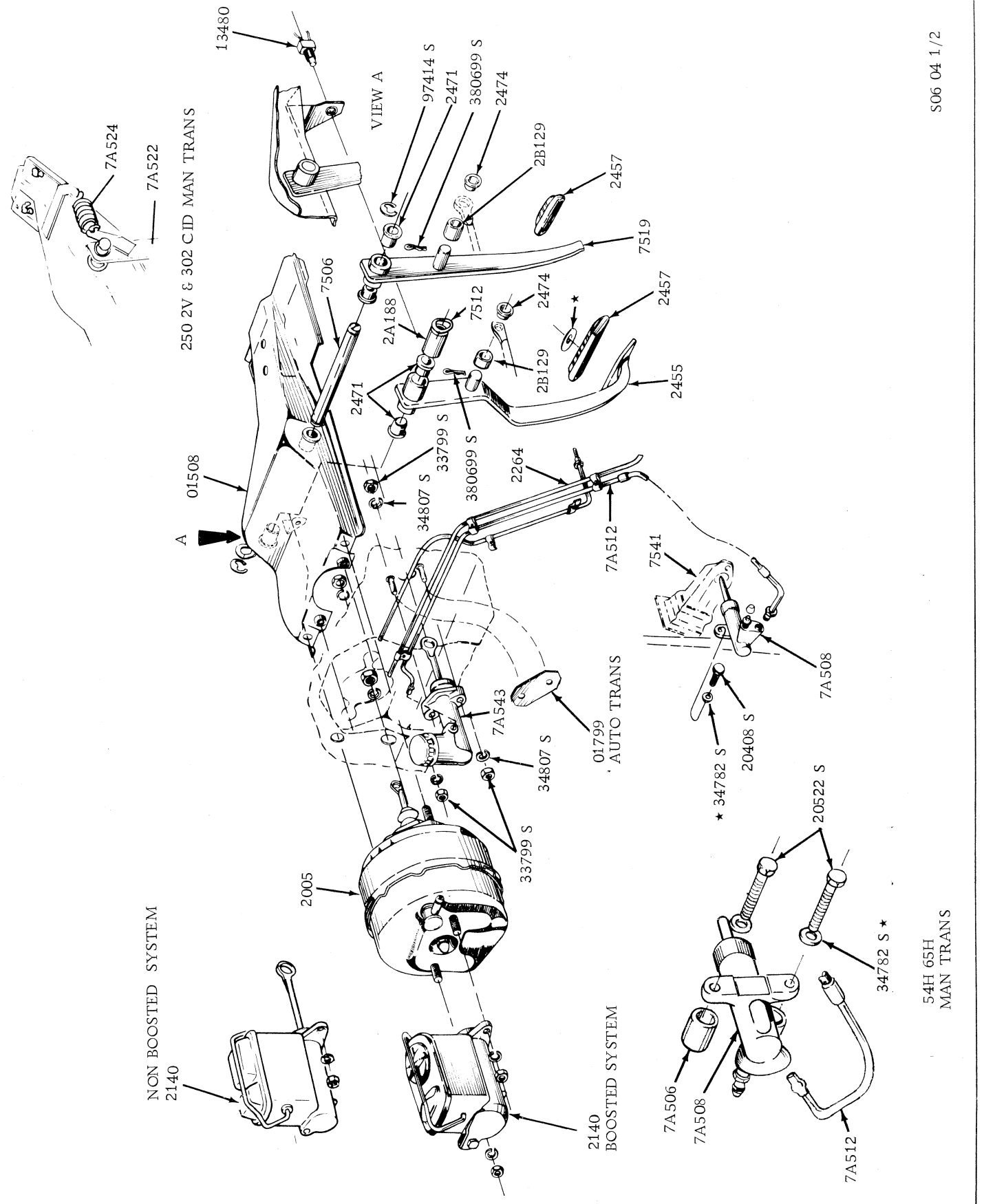

BRAKE AND CLUTCH MECHANISM

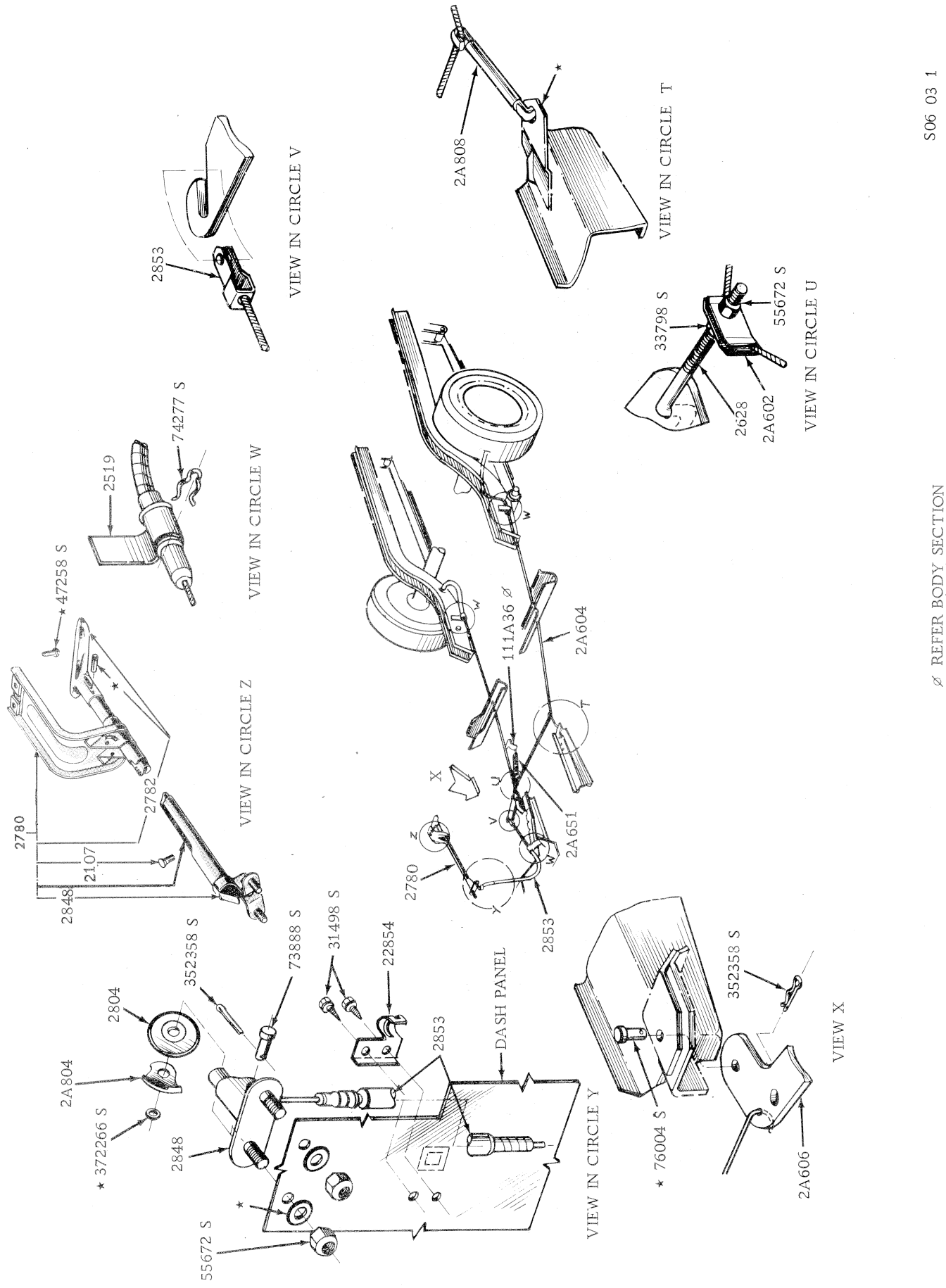

PARKING BRAKE INSTALLATION – XA FALCON – ZF FAIRLANE

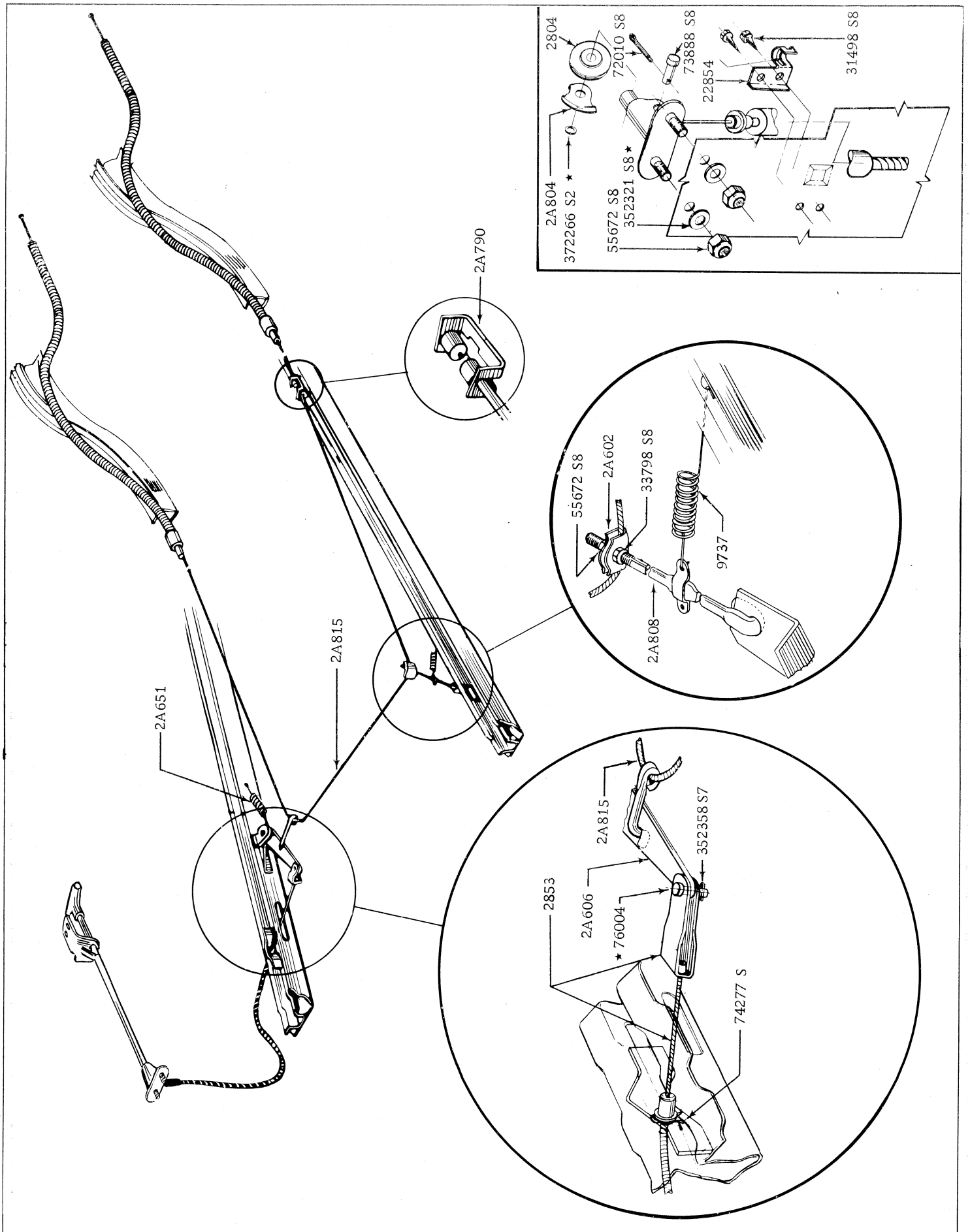

PARKING BRAKE INSTALLATION – XB FALCON – ZG FAIRLANE

MODEL	BODY TYPE	REMARKS	UNIT	PART NUMBER		
– – 3A005 – – HOSE – POWER STEERING RETURN LINE						
XA/B, ZF/G	All	Steering box end	1	XA	3A005	AA
XA/B, ZF/G	All	Pump end	1	XA	3A005	CA
– – 3A006 – – CAP & DIPSTICK – POWER STEERING PUMP						
XA/B, ZF/G	All		1	D1VY	3A006	A
– – 3A013 – – BRACKET – FRONT SUSPENSION LOWER ARM MOUNTING LOWER						
XA/B, ZF/G	All		1	XR	3A013	A
– – 3025 – – BUMPER ASSY. – FRONT SUSPENSION						
XA/B, ZF/G	All		2	XA	3025	A
XA/B, ZF/G	All	Washer – 5/16" spring lock – att. bumper assy. to bracket & stiffener assy.	2	34806 S7		
XA/B, ZF/G	All	Nut – 5/16" – 12 – att. bumper assy. to bracket & stiffener assy.	2	33798 S78		
– – 3A027 – – RETAINER – FRONT SUSPENSION LOWER ARM BALL						
XA/B, ZF/G	All		2	C50Z	3A027	A
– – 3A031 – – GUSSET – FRONT SUSPENSION ARM ADAPTOR TO SIDEMEMBER						
XA/B, ZF/G	All	R.H.	1	XA	3A031	A
XA/B, ZF/G	All	L.H.	1	XA	3A032	A
– – 3A034 – – ARM & BRACKET ASSY. – STEERING IDLER						
XA/B, ZF/G	All		1	XY	3A034	AA
XA/B, ZF/G	All	Bolt – 3/8" – 24 x 3.62" – att. arm & bracket assy. to underbody	2	374420 S		
XA/B, ZF/G	All	Washer – 3/8" flat – att. arm & bracket assy. to underbody	2	377112 S		
XA/B, ZF/G	All	Washer – 9/16" flat – att. arm & bracket assy. to rod assy.	1	379297 S		
XA/B, ZF/G	All	Nut – 9/16" x 18 slotted – att. arm & bracket assy. to rod assy.	1	33985 S		
– – 3047 – – KIT – FRONT SUSPENSION UPPER SHAFT						
XA/B, ZF/G	All		1	XA	3047	KT
– – 3049 – – KIT – FRONT SUSPENSION UPPER ARM BALL JOINT						
XA/B, ZF/G	All	To 12/74	2	XA	3049	AA
XB, ZG	All	From 12/74	2	XB	3049	AA*
– – 3056 – – SHAFT – FRONT SUSPENSION UPPER ARM INNER						
XA/B, ZF/G	All		2	XY	3056	AA
– – 3068 – – BUSHING – FRONT SUSPENSION UPPER ARM INNER SHAFT						
XA/B, ZF/G	All		4	C70A	3068	A
XA/B, ZF/G	All	Grease nipple str. ¼" – 28 taper thread – to plug bushing assy.	3	87907 S8		
– – 3069 – – BUSHING – FRONT SUSPENSION LOWER ARM						
XA/B, ZF/G	All		2	C60A	3069	A
– – 3078 – – ARM – BUSHING & JOINT ASSY. – FRONT SUSPENSION						
XA/B, ZF/G	All		2	C8GY	3078	A
– – 3A105 – – SEAL ASSY. – FRONT SUSPENSION ARM BALL JOINT DUST						
XA/B, ZF/G	All	Upper	2	XA	3A105	A
XA/B, ZF/G	All	Lower	2	C70Z	3A105	A
– – 3107/8 – – SPINDLE – FRONT WHEEL						
XA, ZF	All	R.H. – with drum brakes	1	XA	3107	AA
XA, ZF	All	L.H. – with drum brakes	1	XA	3108	AA
XA/B, ZF/G	All	R.H. – with disc brakes	1	XA	3107	BA
XA/B, ZF/G	All	L.H. – with disc brakes	1	XA	3108	BA
XA/B, ZF/G	All	Nut – 9/16" – 18 slotted – att. arm, shaft & joint assy. ball to spindle	2	34033 S		
– – 3A140 – – BUSHING – FRONT SUSPENSION LOWER ARM STRUT – FRONT						
XA/B, ZF/G	All		2	C60A	3A140	D
– – 3A141/42 – – WASHER – FRONT SUSPENSION LOWER ARM ANCHOR						
XA/B, ZF/G	All	Front & rear	4	C60A	3A142	D

MODEL	BODY TYPE	REMARKS	UNIT	PART NUMBER		
— — 3A187 — — KIT — FRONT SUSPENSION LOWER ARM STRUT — BUSHING						
XA, ZF	All		1	ARC6DZ	3A187	A
XB, ZG	All		1	D3ZZ	3A187	A
— — 3A196 — — SEAL — PITMAN ARM BALL TO STUD DUST						
XA/B, ZF/G	All		1	C4ZA	3A196	A
— — 3A225 — — BUSHING — FRONT SUSPENSION LOWER ARM STRUT — REAR						
XA/B, ZF/G	All		2	C60A	3A225	D
— — 3B236 — — CAM & BOLT ASSY. — FRONT SUSPENSION LOWER ARM ADJUSTING						
XA/B, ZF/G	All		2	C60A	3B236	A
XA/B, ZF/G	All	Nut, lower arm retaining — inner	2	33845 S		
— — 3B238 — — CAM — FRONT SUSPENSION LOWER ARM ADJUSTING REAR						
XA/B, ZF/G	All		2	C60A	3B238	A
— — 3B247/8 — — BRACKET & STIFFENER ASSY. — FRONT SUSPENSION BUMPER						
XA/B, ZF/G	All	R.H.	1	ARC6DB	3B247	A
XA/B, ZF/G	All	L.H.	1	ARC6DB	3B248	A
— — 3263 — — BALL JOINT — FRONT SUSPENSION ARM						
XB, ZG	All	Upper	2	ARD00A	3263	A
— — 3B267 — — BOLT — FRONT SUSPENSION LOWER ARM STRUT						
XA/B, ZF/G	All		4	C90Z	3B267	A
— — 3287 — — CLAMP — SPINDLE CONNECTING ROD						
XA/B, ZF/G	All		4	AF	3287	A
XA/B, ZF/G	All	Bolt — 5/16" — 24 x 1-3/8" — att. clamp to sleeve	4	358655 S		
XA/B, ZF/G	All	Nut — 5/16" — att. clamp to sleeve	4	34443 ES8C		
— — 3289/90 — — END ASSY. — STEERING SPINDLE ARM CONNECTING ROD						
XA/B, ZF/G	All	Outer	2	XW	3289	A
XA/B, ZF/G	All	Inner	2	XW	3290	A
— — 3304 — — ROD ASSY. — STEERING PITMAN TO IDLE ARM						
XA/B, ZF/G	All		1	XA	3304	AC
— — 3310 — — KIT — DRAGLINK ADJUSTING SLEEVE						
XA/B, ZF/G	All		1	ARC6DZ	3310	B
— — 3314 — — SLEEVE — DRAGLINK ADJUSTING						
XA/B, ZF/G	All	Also part of kit ARC6DZ-3310-B	2	C3AA	3314	A
— — 3332 — — COVER ASSY. — SPINDLE CONNECTING ROD END BALL						
XA/B, ZF/G	All		4	XW	3332	A
— — 3351 — — BRACKET — STEERING IDLE ARM						
XA/B, ZF/G	All		1	ARC6DA	3351	A
XA/B, ZF/G	All	Bolt — bracket retaining	2	374420 S		
XA/B, ZF/G	All	Nut — bracket retaining	2	55769 S2*		
XA/B, ZF/G	All	Washer — bracket retaining	2	377112 S		
— — 3352 — — KIT — STEERING IDLER ARM & BUSHING						
XA/B, ZF/G	All		1	XW	3352	A
— — 3356 — — BUSHING ASSY. — STEERING IDLER ARM UPPER						
XA/B, ZF/G	All		1	XY	3356	AA
— — 3358 — — BUSHING ASSY. — STEERING IDLER ARM LOWER						
XA/B, ZF/G	All		1	XW	3358	A
— — 3375 — — ADAPTOR — FRONT SUSPENSION LOWER ARM						
XA/B, ZF/G	All	R.H.	1	XR	3375	A
XA/B, ZF/G	All	L.H.	1	XR	3376	A
— — 3378/9 — — GUSSET — FRONT SUSPENSION ARM ADAPTOR TO SIDEMEMBER						
XA/B, ZF/G	All	R.H.	1	XA	3378	A
XA/B, ZF/G	All	L.H.	1	XA	3379	A
— — 3388 — — SEAT & BUSHING ASSY. — FRONT SUSPENSION UPPER ARM SPRING						
XA/B, ZF/G	All		2	ARC6DA	3388	A

MODEL	BODY TYPE	REMARKS	UNIT	PART NUMBER		
– – 3392/3 – – ARM SHAFT & JOINT ASSY. – FRONT SUSPENSION UPPER						
XA, ZF	All	R.H.	1	XA	3392	AA
XA, ZF	All	L.H. – not serviced – use XA-3392-AA & change grease nipples	1	XA	3393	AA
XB, ZG	All	R.H. & L.H. – to 7/74	2	XA	3392	AA
XB, ZG	All	R.H. & L.H. – from 7/74	2	XB	3392	A*
XA/B, ZF/G	All	Washer – ½" spring – att. shaft & joint assy. to underbody	4	34809 S7		
XA/B, ZF/G	All	Nut – ½" – 13 – att. shaft & joint assy. to underbody	4	33845 S		
XA/B, ZF/G	All	Plug – ¼" – 28	2	374714 S8		
XA/B, ZF/G	All	Seal 'O' ring – .736" I.D. – front suspension joint	4	370367 S100		
– – 3395 – – JOINT ASSY. – FRONT SUSPENSION LOWER ARM BALL						
XA/B, ZF/G	All	For assy. replacement add – (3) 378268 S8 stud, (1) 34033 S nut, (3) 372990 S8 nut	2	C70A	3395	A
– – 3A438/9 – – HOUSING ASSY. – FRONT SUSPENSION ON BODY						
XA/B, ZF/G	All	R.H. – to 12/74	1	XA	3A438	AA
XB, ZG	All	R.H. – from 12/74	1	XB	3A438	A*
XA/B, ZF/G	All	L.H. – to 12/74	1	XA	3A439	AA
XB, ZG	All	L.H. – from 12/74	1	XB	3A439	A*
– – 3447/8 – – ADAPTOR ASSY. – FRONT SUSPENSION						
XA/B, ZF/G	All	R.H.	1	XA	3447	A
XA/B, ZF/G	All	L.H.	1	XA	3448	A
– – 3468/9 – – STRUT – FRONT SUSPENSION LOWER ARM						
XA/B, ZF/G	All	R.H.	1	XA	3468	A
XA/B, ZF/G	All	L.H.	1	XA	3469	A
XA/B, ZF/G	All	Pin – 1/8" x 1.00 cotter – att. strut to bushing & joint assy.	6	72035 S		
– – 3473 – – SPACER – FRONT SUSPENSION LOWER ARM STRUT INSULATOR						
XA/B, ZF/G	All		2	C60A	3473	C
– – 3486/7 – – BRACKET ASSY. – FRONT SUSPENSION LOWER – ARM STRUT MOUNTING						
XA/B, ZF/G	All	R.H.	1	XA	3486	B
XA/B, ZF/G	All	L.H.	1	XA	3487	B
– – 3494 – – HOSE ASSY. – POWER STEERING PRESSURE LINE TO VALVE						
XA/B, ZF/G	All		1	XA	3494	A

MODEL	BODY TYPE	REMARKS	UNIT	PART NUMBER

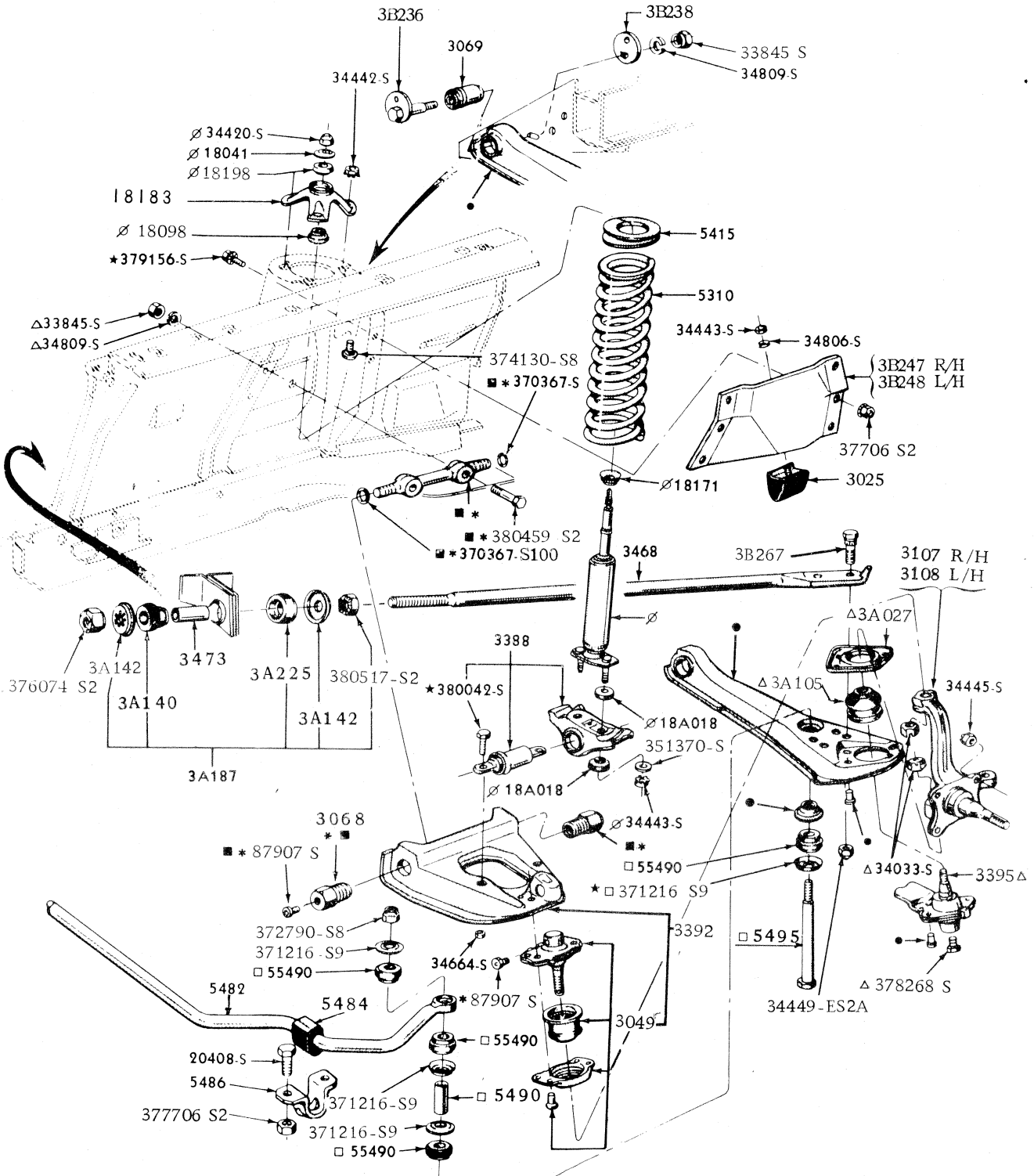

□ SUPPLIED ALSO IN 5A486 KIT
Ø SUPPLIED IN 18124 DAMPER KIT
△ SUPPLIED ALSO WITH 3078 LOWER ARM ASSY
● SUPPLIED ONLY WITH 3078 LOWER ARM ASSY
★ SUPPLIED ALSO WITH 3392 UPPER
■ SUPPLIED IN 3047 KIT

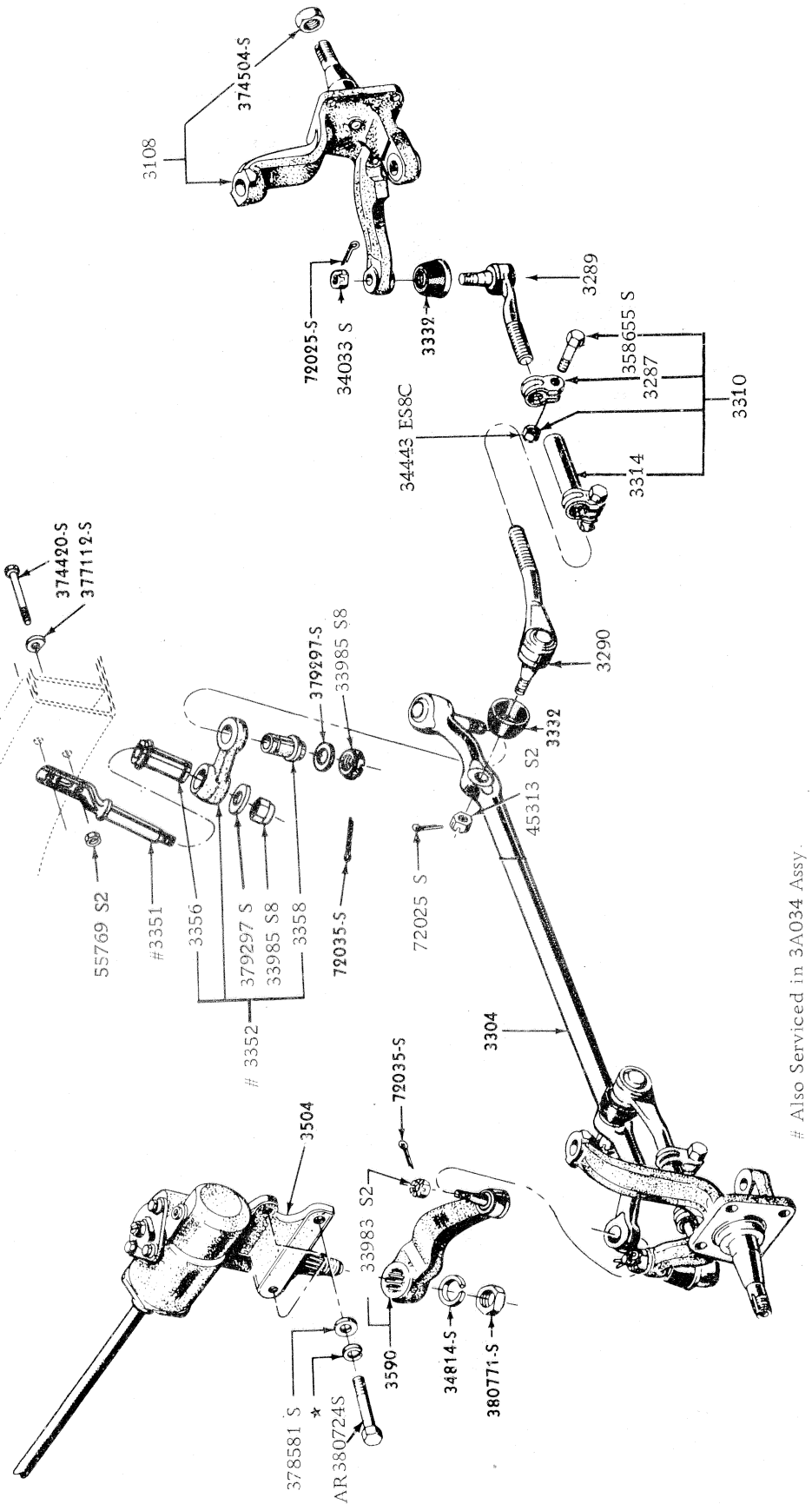
374504-S
3108
72025-S
34033 S
3332
3289
358655 S
3287
3310
34443 ES8C
3314
374420-S
377112-S
379297-S
33985 S8
3290
3332
45313 S2
55769 S2
#3351
3356
379297 S
33985 S8
3358
72035-S
72025 S
3352
3304
Also Serviced in 3A034 Assy.
72035-S
3504
33983 S2
3590
34814-S
380771-S
378581 S
*
AR380724S

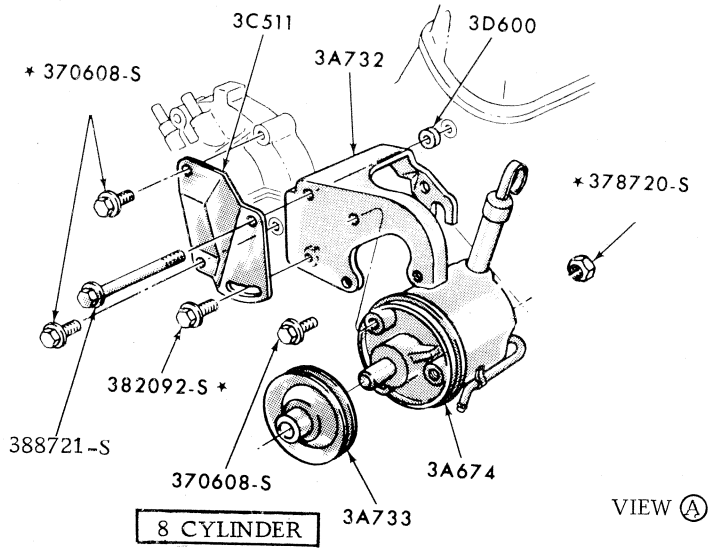
3C511
3D600
* 370608-S
3A732
* 378720-S
382092-S *
388721-S
370608-S
3A674
3A733
8 CYLINDER
VIEW Ⓐ

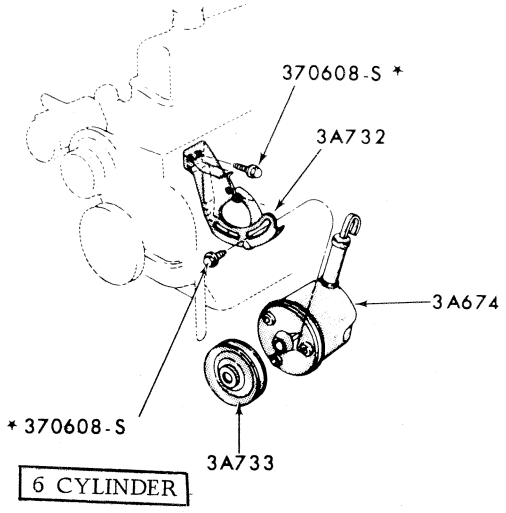
370608-S *
3A732
3A674
* 370608-S
3A733
6 CYLINDER

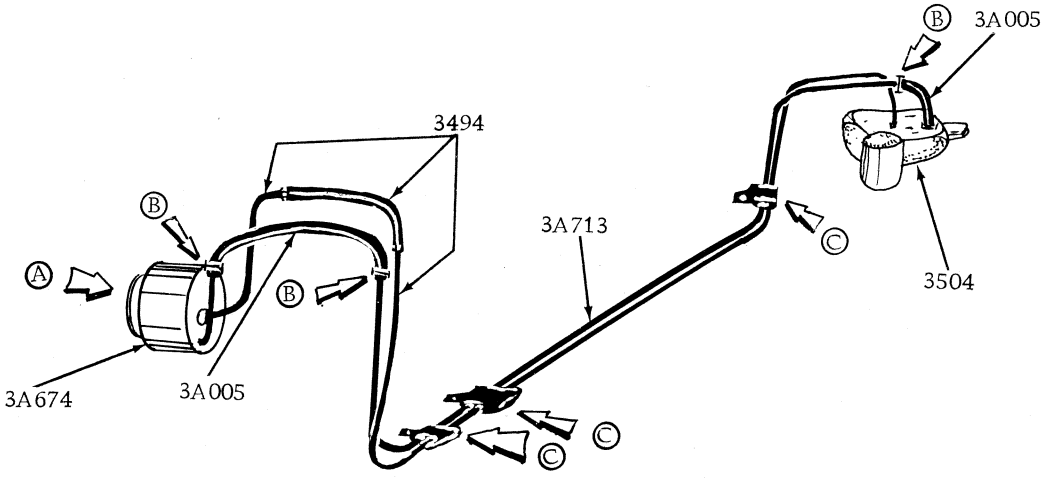
Ⓑ 3A005
3494
Ⓑ
3A713
Ⓐ
Ⓒ
Ⓑ
3504
3A674
3A005
Ⓒ
Ⓒ

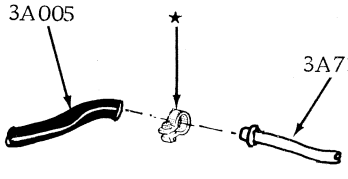
3A005
★
3A713

VIEW Ⓑ

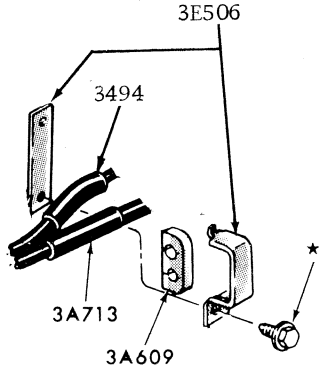
3E506
3494
3A713
★
3A609

VIEW Ⓒ

STEERING GEAR APPLICATION CHART

MODEL	BODY TYPE	STEERING TYPE	RATIO	PART NUMBER	REPLACED BY	PARTS LIST
XA/B, ZF/G	All exc 54H, 65H	Manual	20:1	XA 3504 AA		A
XA/B	54H, 65H	Manual	16:1	XA 3504 BA		B
XA/B, ZF/G	All	Power	Variable	XA 3504 CC		C

DESCRIPTION	PART NUMBER	STEERING GEAR PARTS LIST "A TO L"											
		A	B	C	D	E	F	G	H	I	J	K	L
Bolt – 7/16" – 14 x 3.38" – att. gear to body	AR 380724 S	3	3	3									
Washer – flat – 7/16" – att. gear to body – O.N.R.	378581 S	3	3	3									
Washer – 7/16" spring – att. gear to body – O.N.R.	34848 S	3	3	3									
Nut – 5/16" – 24 – lock – att. gear to column	55676 S8	2	2	2									
GUIDE – STEERING GEAR BALL RETURN	**3523**												
	XW 3523 A	4											
	CRC50R 3523 A		4										
WORM VALVE & SLEEVE ASSY.	**3524**												
	XA 3524 D			C									
KIT – SPRING AND WEDGE	**3C524**												
	A 50204/9			C									
SEAL – RACK ADJUSTING SCREW	**3D528**												
	XA 3D528 A			C									
PLUG – OIL FILLER	**3538**												
	XW 3538 A	A	B										
	XA 3538 A			C									
KIT – OIL SEAL	**3C538**												
	XA 3C538 B			C									
CLAMP – STEERING GEAR BALL RETURN GUIDE	**3544**												
	CRC4AR 3544 A	A											
	CRC50R 3544 A		B										
PISTON RACK & SEAL ASSY.	**3A545**												
	XA 3A545 A			C									
HOUSING ASSY.	**3548**												
	XA 3548 A	A	B										
	XA 3548 B			C									
CUP – WORM THRUST BEARING	**3552**												
	C2AZ 3552 A	2	2										
	XA 3552 A			2									
BALL & CAGE ASSY. – WORM THRUST BEARING	**3571**												
	XA 3571 B	2	2										
	XA 3571 A			2									

DESCRIPTION	PART NUMBER	STEERING GEAR PARTS LIST "A TO L"											
		A	B	C	D	E	F	G	H	I	J	K	L
SHAFT – SECTOR	3575												
	CC20R 3575 C	A	B										
	XA 3575 A			C									
BEARING ASSY. – SECTOR SHAFT	3576												
Upper	C4DZ 3576 B	A	B										
Lower	C1AZ 3576 B	A	B										
Upper	XA 3576 A			C									
Lower	XA 3576 B			C									
SCREW – ADJUSTING	3577												
	B8AZ 3577 A	A	B										
Sector shaft	XA 3577 A			C									
Rack	XA 3577 B			C									
COVER – HOUSING	3580												
	C3AZ 3580 A	A	B										
	XA 3580 A			C									
GASKET – HOUSING COVER	3581												
	C3AZ 3581 A	A	B										
SEAL ASSY. – HOUSING OIL	3591												
	C70Z 3591 A	A	B										
KIT – OIL SEAL	3591												
	XA 3591 A			C									
Consists of (2) XA 3805 A, (1) XA 3805 B, (1) XA 3591 A, (1) XA 3C538 B	XB 3591 KT			C									
BALL – WORM & NUT RECIRCULATING	3647												
	119805 ES	54	54										
PAD – RACK ADJUSTING	3A657												
	XA 3A657 A			C									
ADJUSTER ASSY. – WORM THRUST BEARING	3A670												
	XW 3A670 A	A	B										
BEARING ASSY. – ROLLER	3B673												
	XA 3B673 A			C									
SHIM – VALVE	3D688												
0.002"	XA 3D688 A			C									
0.004" – O.N.R.	XA 3D688 B			C									
0.006"	XA 3D688 C			C									
SPACER – SLEEVE	3C703												
	XA 3C703 A			C									
NUT – WORM THRUST BEARING LOCK	3707												
	B8A 3707 A	A	B										
	XA 3707 A			C									
SLEEVE – COUPLING	3B708												
O.R.B. XA 3524 D	XA 3B708 A			C									

DESCRIPTION	PART NUMBER	STEERING GEAR PARTS LIST "A TO L"											
		A	B	C	D	E	F	G	H	I	J	K	L
RACK & WORM ASSY.	**3A710**												
	CRC1AR 3A710 D	A											
	CRC50R 3A710 A		B										
SEAT – OIL INLET CONNECTION	**3D728**												
	XA 3D728 A			C									
SEAL – OIL	**3738**												
	B5S 3738 A	A	B										
COVER – PISTON	**3A745**												
	XA 3A745 A			C									
SEAL – OIL	**3805**												
Piston cover housing	XA 3805 A			2									
Piston rack	XA 3805 C*			C									
SCREW – BEARING ADJUSTING	**3821**												
	XA 3821 A			C									

MODEL	BODY TYPE	REMARKS	UNIT	PART NUMBER		
-- 3502 -- SPRING – TURN SIGNAL TURN OFF CAM						
XB,ZG	All		1	70EB	3502	AA
-- 3E506 -- CLIP – POWER STEERING PRESSURE & RETURN HOSE						
XA/B, ZF/G	All		3	XA	3E506	AA
-- 3A508 -- CLAMP ASSY. – STEERING COLUMN UPPER						
XA/B, ZF/G	All		1	XA	3A508	AA
-- 3511 -- FLANGE – STEERING COLUMN TUBE						
XA, ZF	All	Floor shift	1	XA	3511	B
XA,ZF	All	Column shift – man. trans.	1	XA	3511	B
XA,ZF	All	Column shift – auto. trans.	1	XA	3511	A
XB,ZG	All		1	XB	3511	A
XB,ZG	All	Column shift – auto. trans. – spring washer	2	382106 S2		
-- 3C511 -- SUPPORT ASSY. – POWER STEERING PUMP						
XA/B, ZF/G	All	8 cyl.	1	D0ZZ	3C511	A
XA/B, ZF/G	All	Bolt – 7/16" – 14 x 6.18" – att. support assy. to cyl. head	1	383721 S2		
-- 3513 -- SEAL – STEERING COLUMN OPENING						
XA/B, ZF/G	All		1	XA	3513	A
-- 3514 -- TUBE ASSY. – STEERING COLUMN						
XA,ZF	All	Floor shift	1	XA	3514	A
XA,ZF	All	Column shift – man. trans.	1	XA	3514	B
XA,ZF	All	Column shift – auto. trans.	1	XA	3514	C
XB,ZG	All	Floor shift – to 6/74	1	XB	3514	B
XB,ZG	All	Floor shift – from 6/74	1	XB	3514	BB
XB,ZG	All	Column shift – man. trans. – to 6/74	1	XB	3514	A
XB,ZG	All	Column shift – man. trans. – from 6/74	1	XB	3514	AA
XB,ZG	All	Column shift – auto. trans. – to 8/74	1	XB	3514	C
XB,ZG	All	Column shift – auto. trans. – from 8/74	1	XB	3514	CC
XA/B, ZF/G	All	Column shift – man. trans. – bolt – No. 10 – 32 x 1¼" att. back up lamp mtg. to steering column.	1	23435 S36		
-- 3517 -- BEARING ASSY. – STEERING COLUMN						
XA/B, ZF/G	All	To 8/74	1	D0AZ	3517	A
XB,ZG	All	From 8/74	1	XB	3517	A*
-- 3518 -- SLEEVE – STEERING COLUMN UPPER BEARING						
XA/B, ZF/G	All		1	D1AZ	3518	A
-- 3524 -- SHAFT – STEERING GEAR						
XA,ZF	All	Manual steering	1	XA	3524	B
XA,ZF	All	Power steering	1	XA	3524	A
XB,ZG	All	Manual steering	1	XB	3524	A
XB,ZG	All	Power steering	1	XB	3524	B
-- 3A525 -- FLANGE & INSULATOR ASSY. – STEERING						
XA/B, ZF/G	All	Manual steering	1	XW	3A525	C
XA/B, ZF/G	All	Power steering	1	XA	3A525	BC
XA/B, ZF/G	All	Bolt – 3/8" – 24 x 1.22" – att. flange & ins. assy. to gear assy.	1	358794 S		
XA,ZF	All	Washer – TAB lock – att. flange & insulator assy. to gear – O.N.R.	1	V 388140 S		
XA/B, ZF/G	All	Nut – special ¾" – 16 – att. flange & insulator assy. to gear	1	V 388141 S		
XA/B, ZF/G	All	Ex power steering – bolt, flange to s/box – 3/8 x 1.750" – 16 UNC	1	304796 S36		
-- 3C529 -- COLUMN ASSY. – STEERING – FLOOR SHIFT (REFER ALSO 7200)						
XA,ZF	All	Manual steering	1	XA	3C529	AP
XA,ZF	All	Power steering	1	XA	3C529	BP
XB,ZG	All	Manual steering – to 8/74	1	XB	3C529	A
XB,ZG	All	Manual steering – from 8/74	1	XB	3C529	AA
XB,ZG	All	Power steering – to 8/74	1	XB	3C529	B
XB,ZG	All	Power steering – from 8/74	1	XB	3C529	BB

DESCRIPTION	PART NUMBER	STEERING GEAR PARTS LIST "A TO L"											
		A	B	C	D	E	F	G	H	I	J	K	L
RACK & WORM ASSY.	**3A710**												
	CRC1AR 3A710 D	A											
	CRC50R 3A710 A		B										
SEAT – OIL INLET CONNECTION	**3D728**												
	XA 3D728 A			C									
SEAL – OIL	**3738**												
	B5S 3738 A	A	B										
COVER – PISTON	**3A745**												
	XA 3A745 A			C									
SEAL – OIL	**3805**												
Piston cover housing	XA 3805 A			2									
Piston rack	XA 3805 C*			C									
SCREW – BEARING ADJUSTING	**3821**												
	XA 3821 A			C									

MODEL	BODY TYPE	REMARKS	UNIT	PART NUMBER		
— — 3502 — — SPRING — TURN SIGNAL TURN OFF CAM						
XB,ZG	All		1	70EB	3502	AA
— — 3E506 — — CLIP — POWER STEERING PRESSURE & RETURN HOSE						
XA/B, ZF/G	All		3	XA	3E506	AA
— — 3A508 — — CLAMP ASSY. — STEERING COLUMN UPPER						
XA/B, ZF/G	All		1	XA	3A508	AA
— — 3511 — — FLANGE — STEERING COLUMN TUBE						
XA, ZF	All	Floor shift	1	XA	3511	B
XA,ZF	All	Column shift — man. trans.	1	XA	3511	B
XA,ZF	All	Column shift — auto. trans.	1	XA	3511	A
XB,ZG	All		1	XB	3511	A
XB,ZG	All	Column shift — auto. trans. — spring washer	2	382106 S2		
— — 3C511 — — SUPPORT ASSY. — POWER STEERING PUMP						
XA/B, ZF/G	All	8 cyl.	1	D0ZZ	3C511	A
XA/B, ZF/G	All	Bolt — 7/16" — 14 x 6.18" — att. support assy. to cyl. head	1	383721 S2		
— — 3513 — — SEAL — STEERING COLUMN OPENING						
XA/B, ZF/G	All		1	XA	3513	A
— — 3514 — — TUBE ASSY. — STEERING COLUMN						
XA,ZF	All	Floor shift	1	XA	3514	A
XA,ZF	All	Column shift — man. trans.	1	XA	3514	B
XA,ZF	All	Column shift — auto. trans.	1	XA	3514	C
XB,ZG	All	Floor shift — to 6/74	1	XB	3514	B
XB,ZG	All	Floor shift — from 6/74	1	XB	3514	BB
XB,ZG	All	Column shift — man. trans. — to 6/74	1	XB	3514	A
XB,ZG	All	Column shift — man. trans. — from 6/74	1	XB	3514	AA
XB,ZG	All	Column shift — auto. trans. — to 8/74	1	XB	3514	C
XB,ZG	All	Column shift — auto. trans. — from 8/74	1	XB	3514	CC
XA/B, ZF/G	All	Column shift — man. trans. — bolt — No. 10 — 32 x 1¼" att. back up lamp mtg. to steering column.	1	23435 S36		
— — 3517 — — BEARING ASSY. — STEERING COLUMN						
XA/B, ZF/G	All	To 8/74	1	D0AZ	3517	A
XB,ZG	All	From 8/74	1	XB	3517	A*
— — 3518 — — SLEEVE — STEERING COLUMN UPPER BEARING						
XA/B, ZF/G	All		1	D1AZ	3518	A
— — 3524 — — SHAFT — STEERING GEAR						
XA,ZF	All	Manual steering	1	XA	3524	B
XA,ZF	All	Power steering	1	XA	3524	A
XB,ZG	All	Manual steering	1	XB	3524	A
XB,ZG	All	Power steering	1	XB	3524	B
— — 3A525 — — FLANGE & INSULATOR ASSY. — STEERING						
XA/B, ZF/G	All	Manual steering	1	XW	3A525	C
XA/B, ZF/G	All	Power steering	1	XA	3A525	BC
XA/B, ZF/G	All	Bolt — 3/8" — 24 x 1.22" — att. flange & ins. assy. to gear assy.	1	358794 S		
XA,ZF	All	Washer — TAB lock — att. flange & insulator assy. to gear — O.N.R.	1	V 388140 S		
XA/B, ZF/G	All	Nut — special ¾" — 16 — att. flange & insulator assy. to gear	1	V 388141 S		
XA/B, ZF/G	All	Ex power steering — bolt, flange to s/box — 3/8 x 1.750" — 16 UNC	1	304796 S36		
— — 3C529 — — COLUMN ASSY. — STEERING — FLOOR SHIFT (REFER ALSO 7200)						
XA,ZF	All	Manual steering	1	XA	3C529	AP
XA,ZF	All	Power steering	1	XA	3C529	BP
XB,ZG	All	Manual steering — to 8/74	1	XB	3C529	A
XB,ZG	All	Manual steering — from 8/74	1	XB	3C529	AA
XB,ZG	All	Power steering — to 8/74	1	XB	3C529	B
XB,ZG	All	Power steering — from 8/74	1	XB	3C529	BB

MODEL	BODY TYPE	REMARKS	UNIT	PART NUMBER		
– – 3530 – – SHROUD – STEERING COLUMN						
XB,ZG	All	Upper – exc. column shift auto. trans.	1	XB	3530	A
XB,ZG	All	Upper – column shift – auto. trans.	1	XB	3530	B
XB,ZG	All	Cover – shroud slot	1	XB	3530	C
– – 3590 – – ARM – STEERING GEAR PITMAN						
XA/B, ZF/G	All	Manual steering	1	XA	3590	A
XA/B, ZF/G	All	Power steering	1	XA	3590	B
XA/B, ZF/G	All	Washer – 7/8" spring – att. arm to gear assy.	1	34814 S7		
XA/B, ZF/G	All	Nut – 7/8" – 14 att. arm to gear assy.	1	380771 S		
– – 3600 – – WHEEL ASSY. – STEERING						
XA,ZF	All exc. 54H, 65H	Black	1	XA	3600	BA1A
XA,ZF	All exc. 54H, 65H	Blue	1	XA	3600	BA1B
XA,ZF	All exc. 54H, 65H	Saddle	1	XA	3600	BA1F
XA,ZF	54D, 71D, 65D, 54G	Burgundy	1	XA	3600	BA1J
XA	54H, 65H	Black – also all with rally pack	1	XA	3600	AA
XB,ZG	All	Black – except 54H, 65H and rally pack	1	XB	3600	AA1A
XB,ZG	All	Brown – except 54H, 65H and rally pack	1	XB	3600	AA1V
XB	54H, 65H	Black – also all with rally pack	1	XB	3600	BA1A
– – 3A609 – – INSULATOR – POWER STEERING HOSE RETAINER						
XA/B, ZF/G	All		3	XA	3A609	AA
– – 3C610 – – RETAINER – STEERING COLUMN UPPER BEARING						
XA,ZF	All	Floor shift	1	C9AZ	3C610	A
XB, ZG	All	Inner	1	C9AZ	3C610	A
XB,ZG	All	Outer	1	XB	3C610	A
XB,ZG	All	Screw – 8 x 18 x 3/8" – att. retainer to column	2	51755 S37		
– – 3C611 – – BOOT – STEERING COLUMN						
XA,ZF	All		1	XA	3C611	A
– – 3623 – – CAP ASSY. – HUB STEERING WHEEL						
XA,ZF	All exc. 54H, 65H	Black	1	XA	3623	BA1A
XA,ZF	All exc. 54H, 65H	Blue	1	XA	3623	BA1B
XA,ZF	All exc. 54H, 65H	Saddle – ORB XA 3623 BA1A	1	XA	3623	BA1F
XA,ZF	54D, 65D, 71D, 54G	Burgundy	1	XA	3623	BA1J
XB	All exc 54H, 65H	Black	1	XB	3623	AB1A
XB	All exc 54H, 65H	Dk. brown	1	XB	3623	AB1V
ZG	All	Black	1	ZG	3623	AB1A
ZG	All	Dk brown	1	ZG	3623	AB1V
XA/B	54H, 65H	Black – also all with rally pack	1	D30Z	3623	A
– – 3641 – – BOLT – STEERING COLUMN TUBE FLANGE						
XA/B, ZF/G	All		2	8M	3641	B
– – 3649 – – EMBLEM – HUB STEERING WHEEL						
XA	54A,B,C,D, 66A,B, 71A,B,D, 78A		1	XW	3649	B
XA,ZF	54A,B,D,E,G, 71D	With bench seat	1	XW	3649	A
XA,ZF	All exc 54H 65H		1	XA	3649	A
ZF	All		1	ZC	3649	A
– – 3668 – – CLAMP – STEERING COLUMN LOWER						
XA/B, ZF/G	All		1	XA	3668	AA
– – 3A674 – – PUMP ASSY. – POWER STEERING						
XA/B, ZF/G	All		1	D3ZZ	3A674	A
– – 3675 – – BRACKET & HOLDER – STEERING & IGNITION LOCK						
XA/B, ZF/G	All		1	XA	3675	A
XA/B, ZF/G	All	Bolt – shear, steering lock to column	2	V 388271 S		
– – 3A675 – – PLATE – STEERING COLUMN LOCK DEFLECTOR						
XA/B, ZF/G	All		1	XA	3A675	A

MODEL	BODY TYPE	REMARKS	UNIT	PART NUMBER		
— — 3676 — — BRACKET ASSY. — STEERING COLUMN						
XA/B, ZF/G	All	To 8/74	1	XA	3676	AA
XB,ZG	All	From 8/74	1	XB	3676	A
XA,ZF	All	Bolt & washer — bracket to column	4	V 387872 S2		
XB,ZG	All	Screw & washer bracket to column	4	V 388400 S2		
XA/B, ZF/G	All	Nut — 5/16 — 18 lock — att. bracket assy. to brake support bracket	2	55736 S2		
— — 3A677 — — WEDGE — STEERING COLUMN ADJUSTING						
XA/B, ZF/G	All		1	XA	3A677	A
— — 3D684 — — KIT — POWER STEERING PUMP REPAIR						
XA/B, ZF/G	All		1	D1AZ	3D684	A
— — 3A690 — — SHROUD ASSY. — STEERING COLUMN LOCK						
XA/B, ZF/G	All	Black	1	XA	3A690	AA1A
XA,ZF	All	Blue	1	XA	3A690	AA1B
XA,ZF	All	Saddle	1	XA	3A690	AA1F
XA,ZF	All	Burgundy	1	XA	3A690	AA1J
XA/B, ZF/G	All	Screw — No. 8 x 15 x 3/8" — att. shroud to steering colum.	1	358735 S2		
— — 3C708 — — WASHER — STEERING COLUMN THRUST						
XA/B, ZF/G	All	Auto trans. — column shift	1	XW	3C708	A
— — 3A713 — — HOSE ASSY. — POWER STEERING RETURN LINE						
XA/B, ZF/G	All		1	XA	3A713	A
— — 3A732 — — BRACKET ASSY. — POWER STEERING PUMP ADJUSTING						
XA/B, ZF/G	All	6 cyl.	1	D3DZ	3A732	A
XA/B, ZF/G	All	8 cyl.	1	D0AZ	3A732	C
— — 3A733 — — PULLEY — POWER STEERING PUMP						
XA/B, ZF/G	All	6 cyl.	1	D00Z	3A733	C
XA/B, ZF/G	All	8 cyl.	1	C9TZ	3A733	D
— — 3A734 — — ARM & BUSHING ASSY. — STEERING IDLER						
XA/B, ZF/G	All		1	XY	3A734	AA
— — 3790 — — EXTENSION — STEERING COLUMN TUBE FLANGE						
XA,ZF	All	Floor shift	1	C8AZ	3790	A
XB,ZG	All	Floor shift	1	XB	3790	A
XB,ZG	All	Screw — 8 — 18 x 3/8" — att. extension to flange (3511)	1	51755 S37		

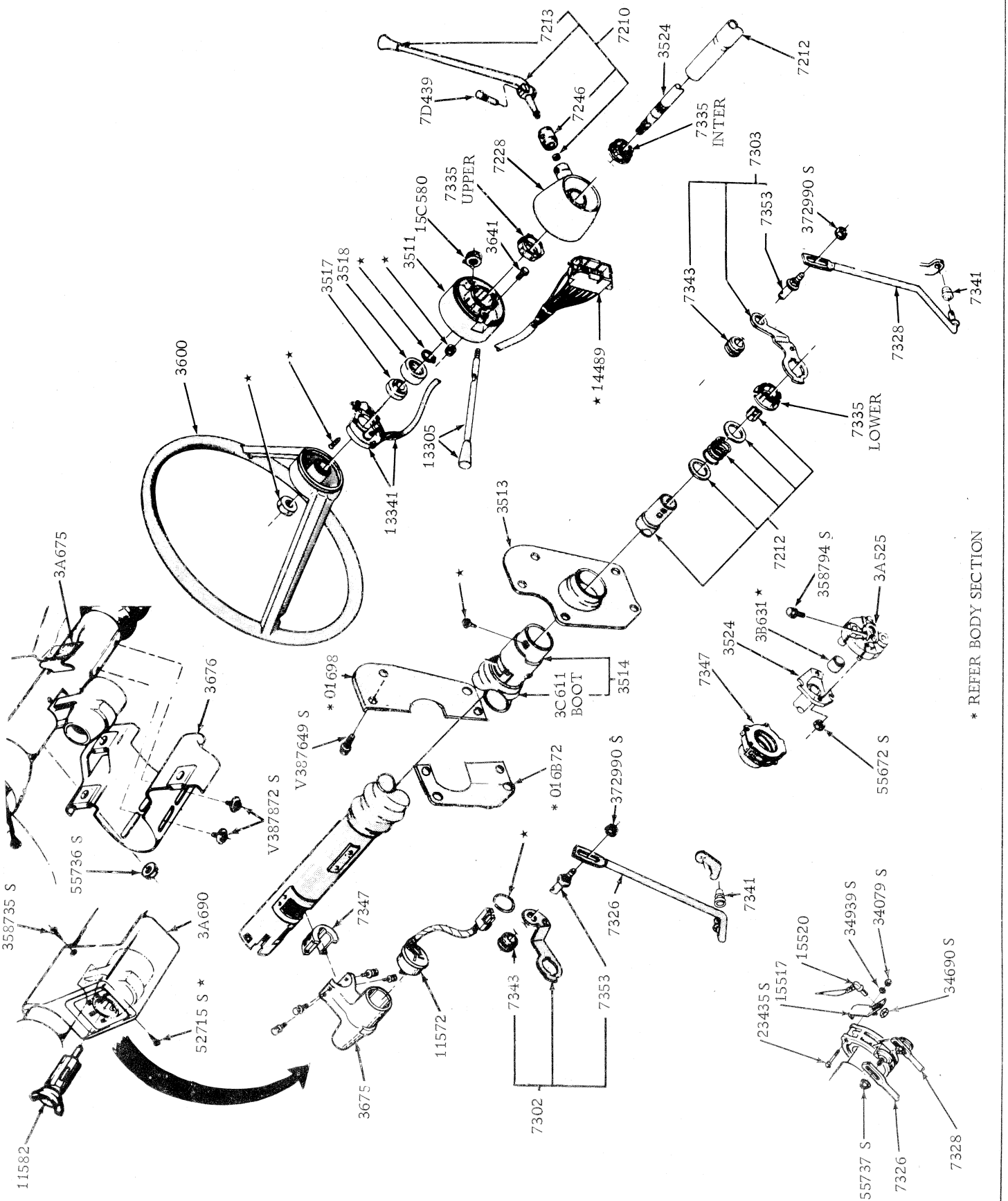

STEERING COLUMN MANUAL TRANS COLUMN CHANGE

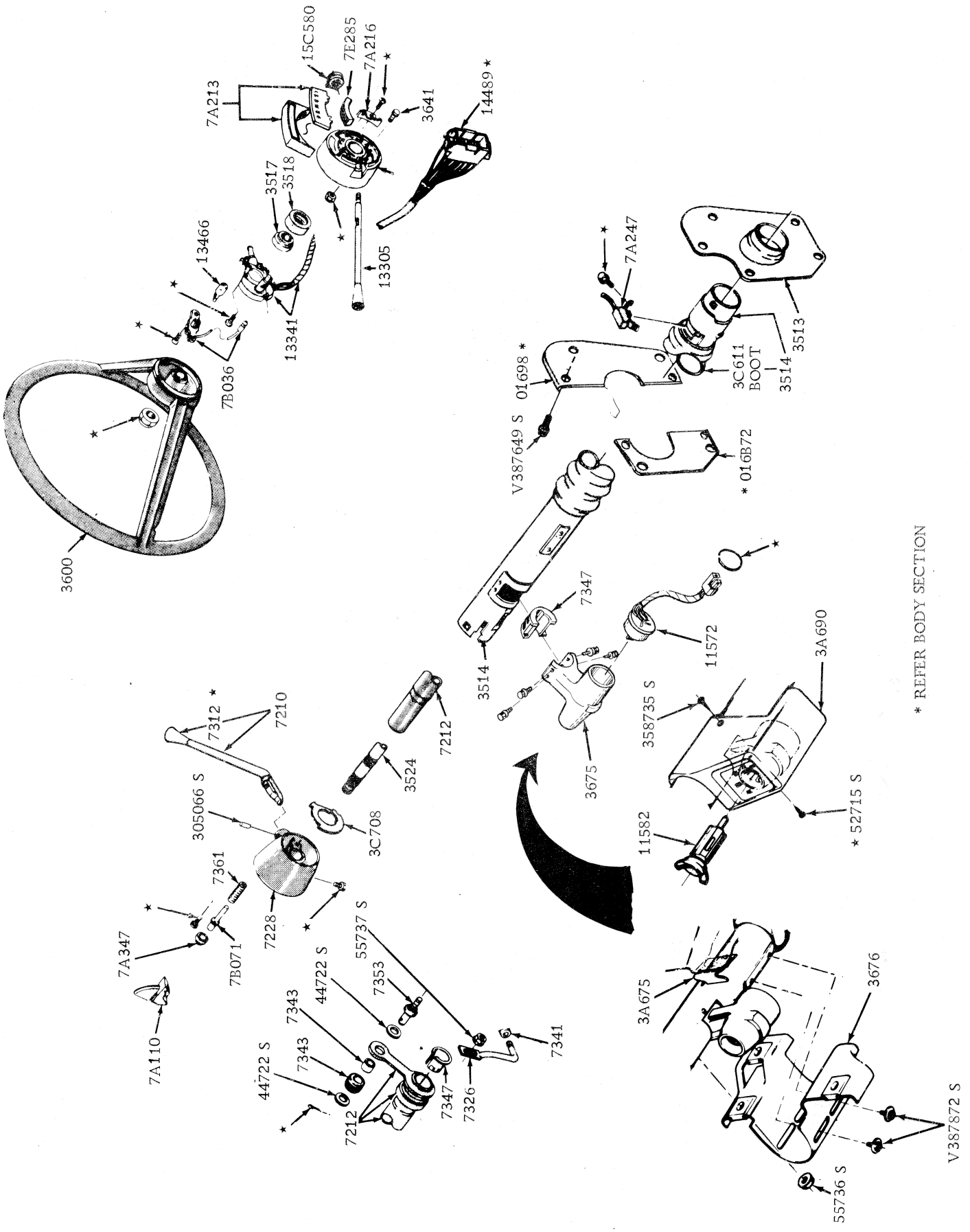

STEERING COLUMN AUTO TRANS COLUMN CHANGE

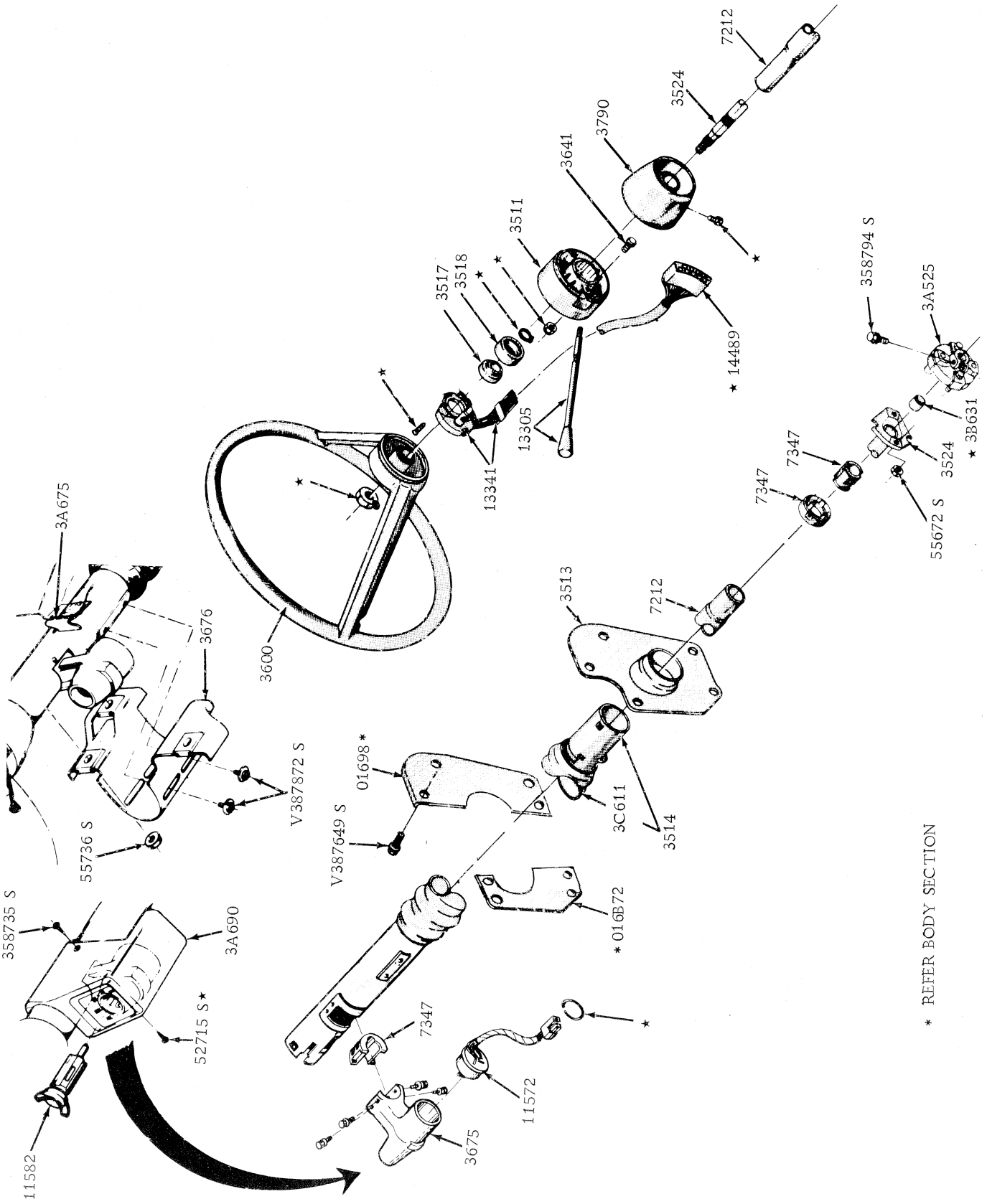

STEERING COLUMN FLOORSHIFT

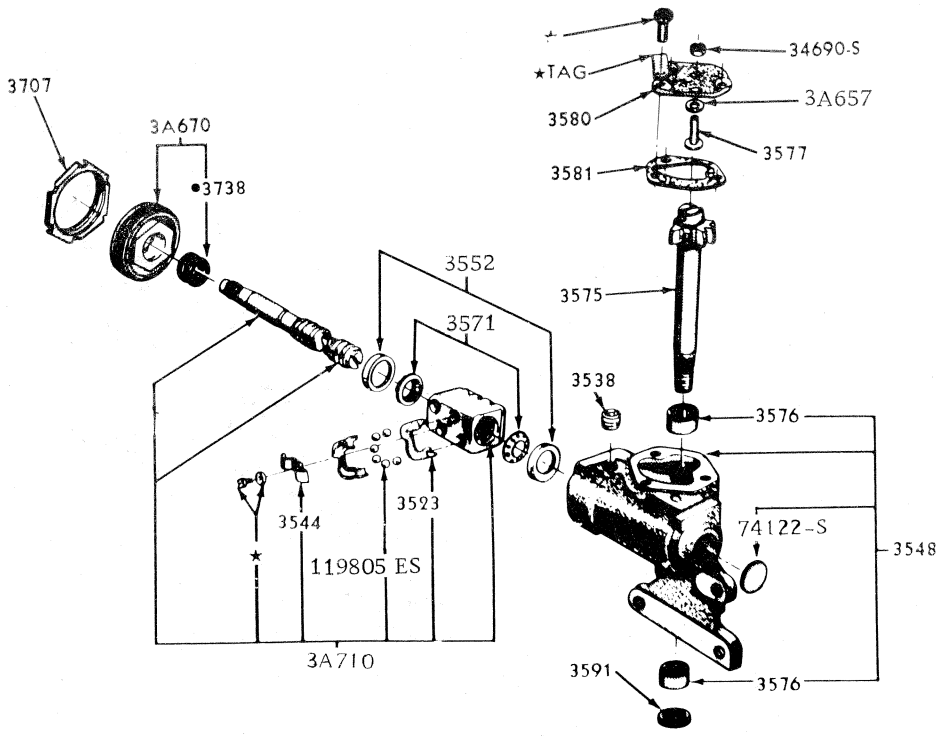

MANUAL STEERING GEAR

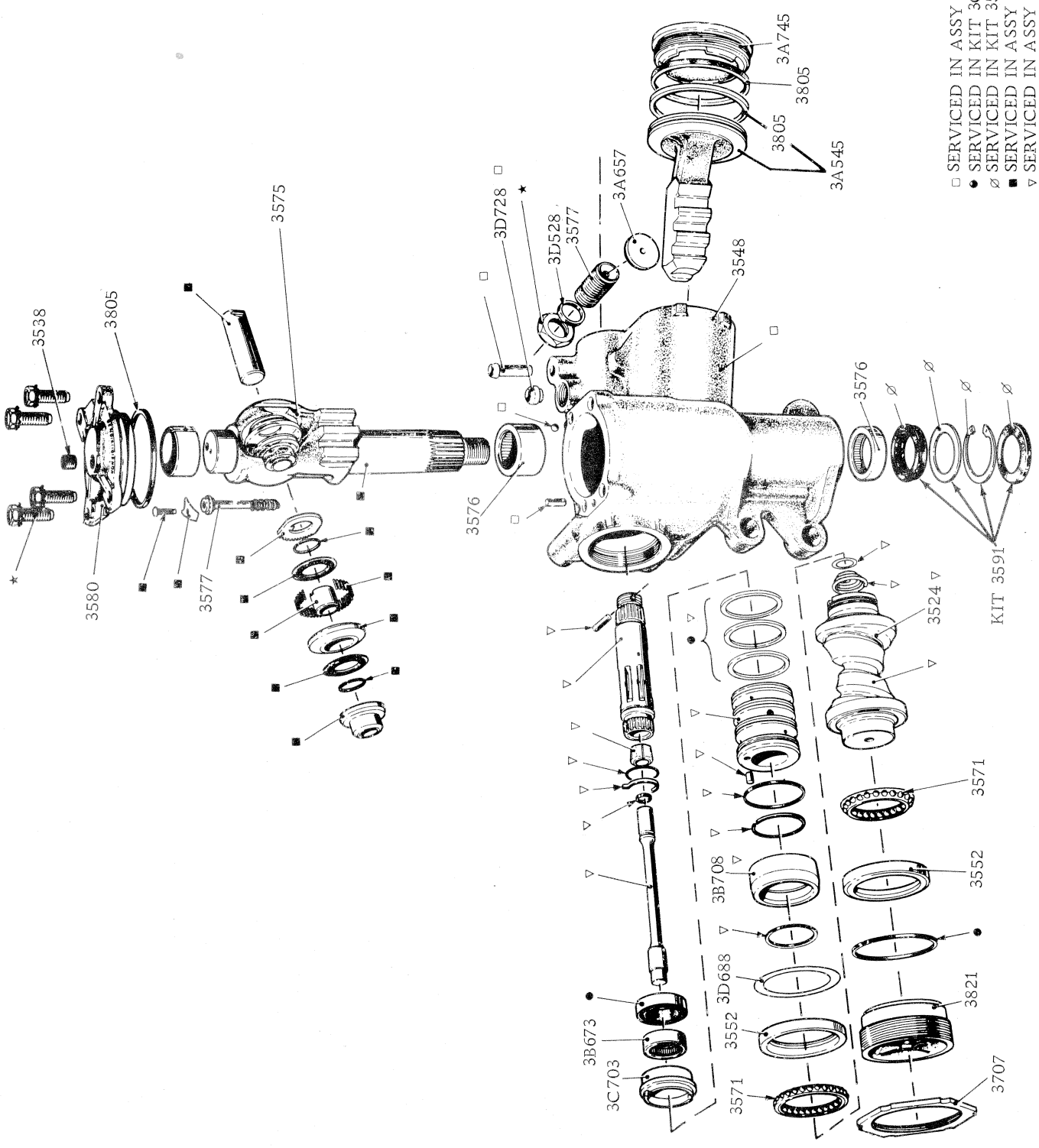

POWER STEERING GEAR

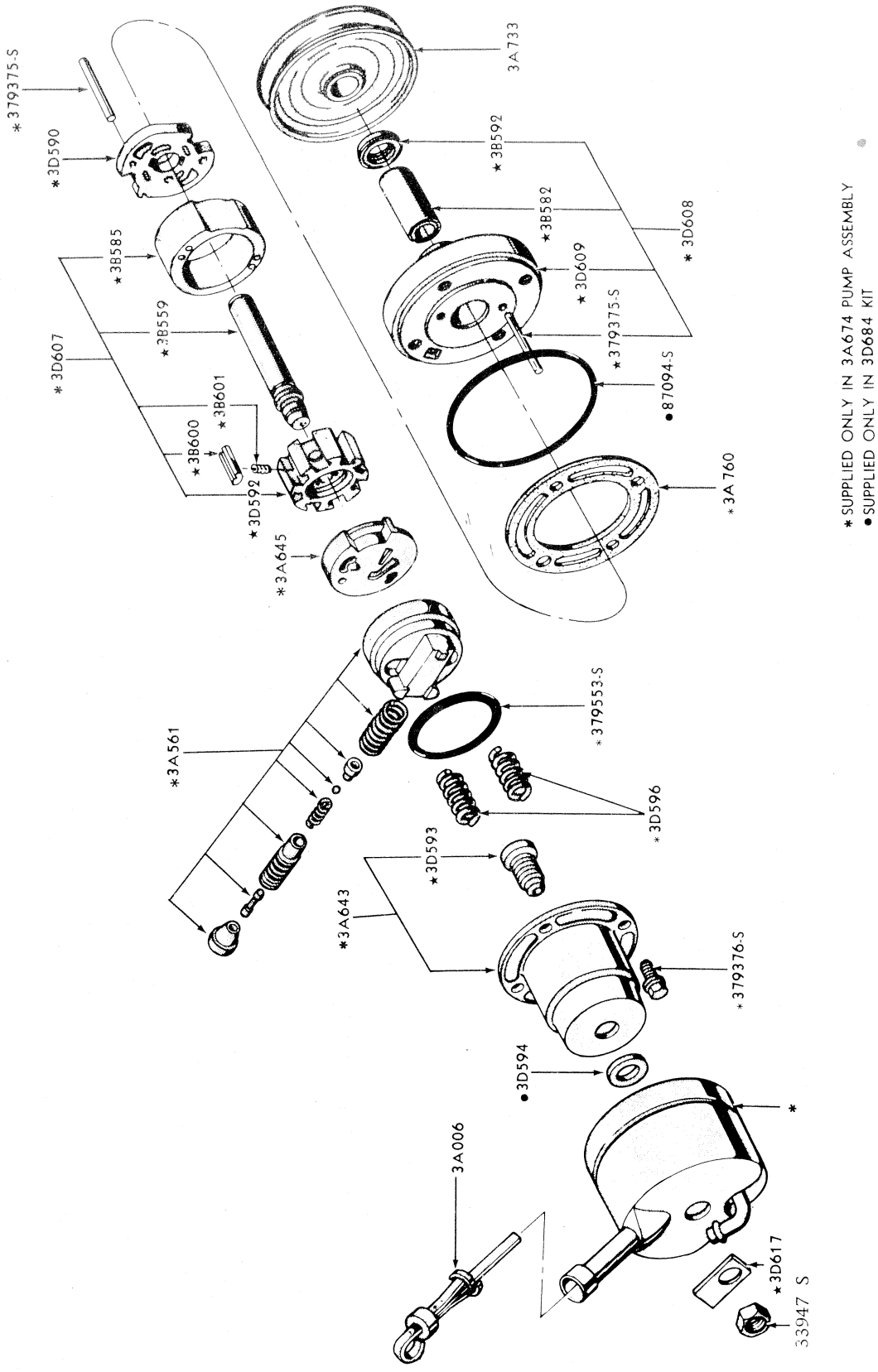

* SUPPLIED ONLY IN 3A674 PUMP ASSEMBLY
• SUPPLIED ONLY IN 3D684 KIT

POWER STEERING PUMP

REAR AXLE AND RELATED PARTS

HOW TO IDENTIFY REAR AXLE PARTS

1. Obtain the Axle Tag Number, which is located on the Differential Housing.

2. Refer to the Application Chart and by using the Body Type, Build Date and Axle Tag Number, select the Parts List required.

   Example: A Falcon 500 Utility with 351 C.I.D. 2V Engine, Automatic Transmission, 10 cwt Load Capacity and Limited Slip Differential, will have a Ford Axle identified ARD2DA/LA and uses Parts List P.

3. Turn to the Parts List and select the Component Part desired.

REAR AXLE APPLICATION CHART – BODY TYPES 54A,B,C,D,E,G, 65B,D, 71A,B,D.

ENGINE	TRANSMISSION TYPE	DIFFERENTIAL TYPE	EXHAUST SYSTEM TYPE	REAR BRAKE TYPE	IDENTIFICATION	PART NUMBER	REPLACED BY	PARTS LIST
200 c.i.d.	All	Conventional	Single	Drum	ARD2DA/AA/AB/AC	XA 4005 AA		A
200 c.i.d.	All	Limited Slip	Single	Drum	ARD2DA/BA/BB/BC	XA 4005 BA		B
250 c.i.d.	Manual	Conventional	Single	Drum	ARD2DA/AA/AB/AC	XA 4005 AA		A
250 c.i.d.	Manual	Limited Slip	Single	Drum	ARD2DA/BA/BB/BC	XA 4005 BA		B
250 c.i.d.	Automatic	Conventional	Single	Drum	ARD2DA/EA/EB/EC	XA 4005 EA		E
250 c.i.d.	Automatic	Limited Slip	Single	Drum	ARD2DA/FA/FB/FC	XA 4005 FA		F
302 c.i.d.	All	Conventional	Single	Drum	ARD2DA/EA/EB/EC	XA 4005 EA		E
302 c.i.d.	All	Limited Slip	Single	Drum	ARD2DA/FA/FB/FC	XA 4005 FA		F
302 c.i.d.	All	Conventional	Dual	Drum	ARD2DA/UA/UB/UC	XA 4005 UA		J
302 c.i.d.	All	Limited Slip	Dual	Drum	ARD2DA/VA/VB/VC	XA 4005 VA		K
351 c.i.d. 2V	Manual	Limited Slip	Single	Drum	ARD2DA/HA/HB	XA 4005 HA		N
351 c.i.d. 2V	Automatic	Limited Slip	Single	Drum	ARD2DA/LA/LB	XA 4005 LA		P
351 c.i.d. 2V	Manual	Limited Slip	Dual	Drum	ARD2DA/XA/XB	XA 4005 XA		O
351 c.i.d. 2V	Automatic	Limited Slip	Dual	Drum	ARD2DA/WA/WB	XA 4005 WA		Q
351 c.i.d. 2V	Manual	Limited Slip	All	Disc	74DA/BA/BB/BC	XA 4005 BA		T
351 c.i.d. 2V	Automatic	Limited Slip	All	Disc	730A/AA/AB/AC	PL 4005 AA		S

REAR AXLE APPLICATION CHART – BODY TYPES 54H, 65H

ENGINE	TRANSMISSION TYPE	REAR BRAKE TYPE	IDENTIFICATION	PART NUMBER	REPLACED BY	PARTS LIST
351 c.i.d. 4V	Manual	Drum	ARD2DA/XA/XB	XA 4005 XA		O
351 c.i.d. 4V	Automatic	Drum	ARD2DA/WA/WB	XA 4005 WA		Q
351 c.i.d. 4V	Manual	Disc	74DA/BA/BB/BC	XB 4005 BA		T
351 c.i.d. 4V	Automatic	Disc	730A/AA/AB/AC	PL 4005 AA		S
351 c.i.d. 4V GTHO	Manual	All	72DA/AA/AB	XA 4005 AD	O.N.R.	R

REAR AXLE APPLICATION CHART – BODY TYPES 66, 78

ENGINE	TRANSMISSION TYPE	LOAD CAPACITY	DIFFERENTIAL TYPE	IDENTIFICATION	PART NUMBER	REPLACED BY	PARTS LIST
200 c.i.d.	All	10 cwt	Conventional	ARD2DA/CA/CB/CC	XA 4005 CA		C
200 c.i.d.	All	10 cwt	Limited Slip	ARD2DA/DA/DB/DC	XA 4005 DA		D
200 c.i.d.	All	15 cwt	Conventional	ARD2DA/SA/SB/SC	XA 4005 SA		G
200 c.i.d.	All	15 cwt	Limited Slip	72DA/CA	XA 4005 C		M
250 c.i.d.	All	10 cwt	Conventional	ARD2DA/AA/AB/AC	XA 4005 AA		A
250 c.i.d.	All	10 cwt	Limited Slip	ARD2DA/BA/BB/BC	XA 4005 BA		B
250 c.i.d.	All	15 cwt	Conventional	ARD2DA/RA/RB/RC	XA 4005 RA		H
250 c.i.d.	All	15 cwt	Limited Slip	72DA/BA	XA 4005 B		L
302 c.i.d.	All	10 cwt	Conventional	ARD2DA/EA/EB/EC	XA 4005 EA		E
302 c.i.d.	All	10 cwt	Limited Slip	ARD2DA/FA/FB/FC	XA 4005 FA		F
302 c.i.d.	All	15 cwt	Conventional	ARD2DA/TA/TB/TC	XA 4005 TA		I
351 c.i.d. 2V	Manual	10 cwt	Limited Slip	ARD2DA/HA/HB	XA 4005 HA		N
351 c.i.d. 2V	Automatic	10 cwt	Limited Slip	ARD2DA/LA/LB	XA 4005 LA		P

REAR AXLE ASSEMBLIES

ENGINE	AXLE TYPE	RATIO	IDENTIFICATION	PART NUMBER	REPLACED BY	PARTS LIST
200/250 c.i.d.	Borg Warner — Conv. Diff.	3.23:1	ARD2DA/AA/AB/AC	XA 4005 AA		A
200/250 c.i.d.	Borg Warner — L.S.D.	3.23:1	ARD2DA/BA/BB/BC	XA 4005 BA		B
200 c.i.d.	Borg Warner — Conv. Diff.	3.50:1	ARD2DA/CA/CB/CC	XA 4005 CA		C
200 c.i.d.	Borg Warner — L.S.D.	3.50:1	ARD2DA/DA/DB/DC	XA 4005 DA		D
250/302 c.i.d.	Borg Warner — Conv. Diff.	2.92:1	ARD2DA/EA/EB/EC	XA 4005 EA		E
250/302 c.i.d.	Borg Warner — L.S.D.	2.92:1	ARD2DA/FA/FB/FC	XA 4005 FA		F
200 c.i.d.	Borg Warner H/D—Conv. Diff.	3.50:1	ARD2DA/SA/SB/SC	XA 4005 SA		G
250 c.i.d.	Borg Warner H/D—Conv. Diff.	3.23:1	ARD2DA/RA/RB/RC	XA 4005 RA		H
302 c.i.d.	Borg Warner H/D—Conv. Diff.	2.92:1	ARD2DA/TA/TB/TC	XA 4005 TA		I
302 c.i.d.	Borg Warner — Conv. Diff.	2.92:1	ARD2DA/UA/UB/UC	XA 4005 UA		J
302 c.i.d.	Borg Warner — L.S.D.	2.91:1	ARD2DA/VA/VB/VC	XA 4005 VA		K
250 c.i.d.	Borg Warner H/D — L.S.D.	3.23:1	72DA/BA	XA 4005 B		L
200 c.i.d.	Borg Warner H/D — L.S.D.	3.50:1	72DA/CA	XA 4005 C		M
351 c.i.d. 2V	Ford — L.S.D.	3.00:1	ARD2DA/HA/HB	XA 4005 HA		N
351 c.i.d.	Ford — L.S.D.	3.00:1	ARD2DA/XA/XB	XA 4005 XA		O
351 c.i.d. 2V	Ford — L.S.D.	2.75:1	ARD2DA/LA/LB	XA 4005 LA		P
351 c.i.d.	Ford — L.S.D.	2.75:1	ARD2DA/WA/WB	XA 4005 WA		Q
351 c.i.d.4V GTHO	Ford — Detroit Locker	3.00:1	72DA/AA/AB	XA 4005 AD	O.N.R.	R
351 c.i.d.	Ford — L.S.D.	2.75:1	730A/AA/AB/AC	PL 4005 AA		S
351 c.i.d.	Ford — L.S.D.	3.00:1	74DA/BA/BB/BC	XB 4005 BA		T

DESCRIPTION	PART NUMBER	REAR AXLE PARTS LIST "A TO L"											
		A	B	C	D	E	F	G	H	I	J	K	L
HOUSING & CARRIER ASSY.	**4010**												
	XA 4010 B	A	B	C	D	E	F						
	XA 4010 A							G	H	I			L
	XA 4010 C										J	K	
Bolt – 3/8" – 16 x 2" – cap to carrier	43005 S	4	4	4	4	4	4	4	4	4	4	4	4
RETAINER – AXLE SHAFT BEARING OUTER	**4020**												
	XY 4020 A	2	2	2	2	2	2				2	2	2
	XA 4020 BA							2	2	2			
VENT ASSY. – REAR AXLE HOUSING (REFER ALSO 4338)	**4022**												
	XW 4022 A	A	B	C	D	E	F	G	H	I	J	K	L
Washer – 7/16" lock – att. vent to connector	34808 S78	A	B	C	D	E	F	G	H	I	J	K	L
DIFF. ASSY.	**4026**												
	XT 4880 A		B		D		F					K	L
COVER – REAR AXLE DIFF. HOUSING	**4033**												
	ARC6DZ 4033 A	A	B	C	D	E	F	G	H	I	J	K	L
GASKET – REAR AXLE DIFF. HOUSING COVER	**4036**												
	ARC6DZ 4036 A	A	B	C	D	E	F	G	H	I	J	K	L
PLUG – OIL FILLER	**4A036**												
	XY 4A036 A	A	B	C	D	E	F	G	H	I	J	K	L
Gasket – oil filler plug	AR 387434 S	A	B	C	D	E	F	G	H	I	J	K	L
NUT OR SHIM – DIFF. BEARING ADJUSTING	**4067**												
.254"	ARC6DZ 4067 A	2	2	2	2	2	2	2	2	2	2	2	2
.256"	ARC6DZ 4067 B	2	2	2	2	2	2	2	2	2	2	2	2
.258"	ARC6DZ 4067 C	2	2	2	2	2	2	2	2	2	2	2	2
.260"	ARC6DZ 4067 D	2	2	2	2	2	2	2	2	2	2	2	2
.262"	ARC6DZ 4067 E	2	2	2	2	2	2	2	2	2	2	2	2
.264"	ARC6DZ 4067 F	2	2	2	2	2	2	2	2	2	2	2	2
.266"	ARC6DZ 4067 G	2	2	2	2	2	2	2	2	2	2	2	2
.268"	ARC6DZ 4067 H	2	2	2	2	2	2	2	2	2	2	2	2
.270"	ARC6DZ 4067 J	2	2	2	2	2	2	2	2	2	2	2	2
.272"	ARC6DZ 4067 K	2	2	2	2	2	2	2	2	2	2	2	2
.274"	ARC6DZ 4067 L	2	2	2	2	2	2	2	2	2	2	2	2
.276"	ARC6DZ 4067 M	2	2	2	2	2	2	2	2	2	2	2	2
.278"	ARC6DZ 4067 N	2	2	2	2	2	2	2	2	2	2	2	2
.280"	ARC6DZ 4067 P	2	2	2	2	2	2	2	2	2	2	2	2
.282"	ARC6DZ 4067 Q	2	2	2	2	2	2	2	2	2	2	2	2
.284"	ARC6DZ 4067 R	2	2	2	2	2	2	2	2	2	2	2	2
.294"	ARC6DZ 4067 S	2	2	2	2	2	2	2	2	2	2	2	2
HOUSING ASSY. – DIFFERENTIAL	**4204**												
2 pinion	ARC6DZ 4204 C	A		C		E					J	K	
	XT 4204 C		B		D		F					K	L
4 pinion	ARC6DZ 4204 D							G		I			
GEAR SET – REAR AXLE	**4209**												
3.23:1 ratio	ARC6DZ 4209 A	A	B						H				L
3.50:1 ratio	ARC6DZ 4209 B			C									
3.50:1 ratio	ARC6DZ 4209 D				D			G					
2.92:1 ratio	XY 4209 A					E	F			I		K	

DESCRIPTION	PART NUMBER	REAR AXLE PARTS LIST "A TO L"											
		A	B	C	D	E	F	G	H	I	J	K	L
SHAFT – REAR AXLE DIFF. PINION	4211												
	ARC6DZ 4211 A	A	B	C	D	E	F	G	H	I	J	K	L
	ARC6DZ 4211 B							2	2	2			
Pin – 3/16 x 1¼" spring – use as diff. shaft lock pin	305110 S	3		3		3		3		3			
SPRING – DIFFERENTIAL CLUTCH	4214												
	XT 4214 A		4		4		4					4	4
PINION – REAR AXLE DIFF.	4215												
	ARC6DZ 4215 B	2	2	2	2	2	2	4	4	4	2	2	2
BOLT – DIFFERENTIAL CASE	4216												
	XT 4216 A		8		8		8					8	8
BOLT – GEAR TO PINION CASE LOCK	4217												
	XW 4217 A	8	8	8	8	8	8	8	8	8	8	8	8
BEARING ASSY. – DIFF. (MATCHED)	4220												
	ARC6DZ 4220 A	2	2	2	2	2	2	2	2	2	2	2	2
WASHER – DIFF. SIDE GEAR THRUST	4228												
	ARC6DZ 4228 B	2		2		2		2	2	2			
.005" thick	XT 4228 B		2		2		2				2	2	2
.010" thick	XT 4228 C		2		2		2				2	2	2
WASHER – DIFF. PINION THRUST	4230												
	ARC6DZ 4230 B	2	2	2	2	2	2	4	4	4	2	2	2
SHAFT & BEARING ASSY. – REAR AXLE	4234/4725												
R.H.	XA 4234 B	A	B	C	D	E	F	G	H	I	J	K	L
L.H.	XA 4725 B	A	B	C	D	E	F	G	H	I	J	K	L
GEAR – REAR AXLE DIFF. SIDE	4236												
	XT 4236 B		2		2		2					2	2
	ARC6DZ 4236 B							2	2	2			
PLATE – CLUTCH SPRING PRE LOAD DIFF.	4A326												
	XT 4419 A		B		D		F					K	L
BOLT – COVER TO HOUSING	4346												
	ARC6DZ 4346 A	9	9	9	9	9	9	9	9	9	9	9	9
PLATE – CLUTCH SPRING PRE LOAD DIFF. (REFER 4A326)	4419												
BLOCK – REAR AXLE DIFF. PINION	4419												
	ARC6DZ 4419 A							2	2	2		2	
BEARING ASSY. – REAR AXLE DRIVE PINION GEAR FRONT	4615												
	C0DW 4615 A	A	B	C	D	E	F	G	H	I	J	K	L
CONE & ROLLER ASSY. – DRIVE PINION BEARING REAR	4625												
	C0DW 4625 A	A	B	C	D	E	F	G	H	I	J	K	L

DESCRIPTION	PART NUMBER	REAR AXLE PARTS LIST "A TO L"											
		A	B	C	D	E	F	G	H	I	J	K	L
SHIM – REAR AXLE PINION BEARING – REAR – SELECTIVE FIT													
	4663												
.080"	ARC6DZ 4663 A	A	B	C	D	E	F	G	H	I	J	K	L
.082"	ARC6DZ 4663 B	A	B	C	D	E	F	G	H	I	J	K	L
.084"	ARC6DZ 4663 C	A	B	C	D	E	F	G	H	I	J	K	L
.086"	ARC6DZ 4663 D	A	B	C	D	E	F	G	H	I	J	K	L
.088"	ARC6DZ 4663 E	A	B	C	D	E	F	G	H	I	J	K	L
.090"	ARC6DZ 4663 F	A	B	C	D	E	F	G	H	I	J	K	L
.092"	ARC6DZ 4663 G	A	B	C	D	E	F	G	H	I	J	K	L
.094"	ARC6DZ 4663 H	A	B	C	D	E	F	G	H	I	J	K	L
.096"	ARC6DZ 4663 J	A	B	C	D	E	F	G	H	I	J	K	L
.098"	ARC6DZ 4663 K	A	B	C	D	E	F	G	H	I	J	K	L
.100"	ARC6DZ 4663 L	A	B	C	D	E	F	G	H	I	J	K	L
SHIM – REAR AXLE PINION BEARING – FRONT – SELECTIVE FIT													
	4672												
.070"	ARC6DZ 4672 AA	A	B	C	D	E	F	G	H	I	J	K	L
.072"	ARC6DZ 4672 AB	A	B	C	D	E	F	G	H	I	J	K	L
.074"	ARC6DZ 4672 AC	A	B	C	D	E	F	G	H	I	J	K	L
.076"	ARC6DZ 4672 AD	A	B	C	D	E	F	G	H	I	J	K	L
.078"	ARC6DZ 4672 AE	A	B	C	D	E	F	G	H	I	J	K	L
.080"	ARC6DZ 4672 AF	A	B	C	D	E	F	G	H	I	J	K	L
.082"	ARC6DZ 4672 AG	A	B	C	D	E	F	G	H	I	J	K	L
.084"	ARC6DZ 4672 AH	A	B	C	D	E	F	G	H	I	J	K	L
.086"	ARC6DZ 4672 AJ	A	B	C	D	E	F	G	H	I	J	K	L
.088"	ARC6DZ 4672 AK	A	B	C	D	E	F	G	H	I	J	K	L
.090"	ARC6DZ 4672 AL	A	B	C	D	E	F	G	H	I	J	K	L
.092"	ARC6DZ 4672 AM	A	B	C	D	E	F	G	H	I	J	K	L
.094"	ARC6DZ 4672 AN	A	B	C	D	E	F	G	H	I	J	K	L
.096"	ARC6DZ 4672 AP	A	B	C	D	E	F	G	H	I	J	K	L
.098"	ARC6DZ 4672 AQ	A	B	C	D	E	F	G	H	I	J	K	L
.100"	ARC6DZ 4672 AR	A	B	C	D	E	F	G	H	I	J	K	L
.102"	ARC6DZ 4672 AS	A	B	C	D	E	F	G	H	I	J	K	L
.104"	ARC6DZ 4672 AT	A	B	C	D	E	F	G	H	I	J	K	L
.106"	ARC6DZ 4672 AU	A	B	C	D	E	F	G	H	I	J	K	L
.071"	CF 4672 C	A	B	C	D	E	F	G	H	I	J	K	L
.073"	CF 4672 E	A	B	C	D	E	F	G	H	I	J	K	L
.075"	CF 4672 G	A	B	C	D	E	F	G	H	I	J	K	L
.077"	CF 4672 J	A	B	C	D	E	F	G	H	I	J	K	L
.079"	CF 4672 L	A	B	C	D	E	F	G	H	I	J	K	L
.081"	CF 4672 N	A	B	C	D	E	F	G	H	I	J	K	L
SEAL ASSY. – REAR AXLE DRIVE PINION OIL													
	4676												
	XY 4676 A	A	B	C	D	E	F	G	H	I	J	K	L
SHAFT & BEARING ASSY. – REAR AXLE L.H. (REFER 4234)													
	4725												
FLANGE ASSY. – UNIVERSAL JOINT AXLE END													
	4851												
	XY 4851 A	A	B	C	D	E	F	G	H	I	J	K	L
Lockwasher – flange to pinion not serviced	372251 S	A	B	C	D	E	F	G	H	I	J	K	L
Locknut – flange to pinion	371518 S	A	B	C	D	E	F	G	H	I	J	K	
Nut – flange to pinion ¾" UNF	AR 387575 S												L
DEFLECTOR – DRIVE PINION OIL SEAL DUST													
	4859												
	XY 4859 A	A	B	C	D	E	F	G	H	I	J	K	L
KIT – LOCKING DIFFERENTIAL (REFER GROUP 4026)													
	4880												

DESCRIPTION	PART NUMBER	REAR AXLE PARTS LIST "A TO L"											
		A	B	C	D	E	F	G	H	I	J	K	L
HUB – DIFFERENTIAL GEAR CLUTCH	4946												
	XT 4946 A		2		2		2					2	2

DESCRIPTION	PART NUMBER	REAR AXLE PARTS LIST "M TO X"											
		M	N	O	P	Q	R	S	T	U	V	W	X
HOUSING & CARRIER ASSY.	**4010**												
	XA 4010 A	M											
	D2DW 4010 B		N	O	P	Q	R	S	T				
Bolt – 3/8" – 16 x 2" – cap to carrier	43005 S	4											
RETAINER – AXLE SHAFT BEARING OUTER													
	4020												
	XY 4020 A	2											
	C8UZ 4020 A		N	O	P	Q	R						
Not serviced	4020							S	T				
VENT ASSY. – REAR AXLE HOUSING (REFER ALSO 4338)													
	4022												
	XW 4022 A	M											
Washer 7/16" lock – att. vent to connector	34808 S78	M											
RETAINER – DIFF. SIDE GEAR SPRING	**4A022**												
	C5AZ 4A022 A						2						
SPRING – DIFF. SIDE GEAR	**4A024**												
	C5AZ 4A024 A						2						
DIFF. ASSY.	**4026**												
	XT 4880 A	M											
	C90Z 4026 B		N	O	P	Q		S	T				
	D00Z 4026 A						R						
COVER – REAR AXLE DIFF. HOUSING	**4033**												
	ARC6DZ 4033 A	M											
GASKET – CARRIER REAR AXLE	**4035**												
	B7A 4035 A		N	O	P	Q	R	S	T				
GASKET – REAR AXLE DIFF. HOUSING COVER													
	4036												
	ARC6DZ 4036 A	M											
PLUG – OIL FILLER	**4A036**												
	XY 4A036 A	M											
Gasket – oil filler plug	AR 387434 S	M											
NUT OR SHIM – DIFF. BEARING ADJUSTING													
	4067												
.254"	ARC6DZ 4067 A	2											
.256"	ARC6DZ 4067 B	2											
.258"	ARC6DZ 4067 C	2											
.260"	ARC6DZ 4067 D	2											
.262"	ARC6DZ 4067 E	2											
.264"	ARC6DZ 4067 F	2											
.266"	ARC6DZ 4067 G	2											
.268"	ARC6DZ 4067 H	2											
.270"	ARC6DZ 4067 J	2											
.272"	ARC6DZ 4067 K	2											
.274"	ARC6DZ 4067 L	2											
.276"	ARC6DZ 4067 M	2											
.278"	ARC6DZ 4067 N	2											
.280"	ARC6DZ 4067 P	2											
.282"	ARC6DZ 4067 Q	2											
.284"	ARC6DZ 4067 R	2											
.294"	ARC6DZ 4067 S	2											
Nut – 2-31/32" – 16	B7AZ 4067 A		2	2	2	2	2	2	2				

DESCRIPTION	PART NUMBER	REAR AXLE PARTS LIST "M TO X"											
		M	N	O	P	Q	R	S	T	U	V	W	X
CARRIER ASSY. – DIFF.	4141												
	D00Z 4141 A		N	O	P	Q	R	S	T				
LOCK – DIFF. ADJUSTING NUT	4143												
	C6AZ 4143 B		2	2	2	2	2	2	2				
Bolt – 5/16" – 8 x 7/16" – lock to cap	350211 S		2	2	2	2	2	2	2				
LUBRICATOR – DIFFERENTIAL	4159												
	C40Z 4159 A		N	O	P	Q							
CARRIER ASSY.	4200												
3.00:1 O.R.C.	C90W 4200 AH		N	O					T				
2.75:1	D00W 4200 L				P	Q		S					
3.00:1	D2DW 4200 A						R						
HOUSING ASSY. – DIFFERENTIAL	4204												
	XT 4204 C	M											
	D3TZ 4204 A		N	O	P	Q		S	T				
	D00Z 4204 E						R						
GEAR SET – REAR AXLE	4209												
3.50:1 ratio	ARC6DZ 4209 D	M											
3.00:1 ratio	C0AZ 4209 E		N	O			R		T				
2.75:1 ratio	C7AZ 4209 J				P	Q		S					
Bolt – 7/16" – 20 x .94 – hex. hd. lock	372487 S						10						
SHAFT – REAR AXLE DIFF. PINION	4211												
	ARC6DZ 4211 A	M											
Kit – shaft & seal	C1AZ 4211 B		N	O	P	Q		S	T				
Kit – shaft & pin	B7AZ 4211 A		N	O	P	Q		S	T				
SPRING – DIFFERENTIAL CLUTCH	4214												
	XT 4214 A	4											
	D0AZ 4214 A		4	4	4	4		4	4				
PINION – REAR AXLE DIFF.	4215												
	ARC6DZ 4215 B	2											
	C80Z 4215 A		N	O	P	Q		S	T				
BOLT – DIFFERENTIAL CASE	4216												
	XT 4216 A	8											
BOLT – GEAR TO PINION CASE LOCK	4217												
	XW 4217 A	8											
BEARING ASSY. – DIFF. (MATCHED)	4220												
	ARC6DZ 4220 A	2											
CONE & ROLLER ASSY. – DIFF.	4221												
	C9AZ 4221 A		2	2	2	2	2	2	2				
CUP – DIFF.	4222												
	C9AZ 4222 A		2	2	2	2	2	2	2				
WASHER – DIFF. SIDE GEAR THRUST	4228												
.005" thick	XT 4228 B	2											
.010" thick	XT 4228 C	2											
	C90Z 4228 A		N	O	P	Q		S	T				
WASHER – DIFF. PINION THRUST	4230												
	ARC6DZ 4230 B	2											
	C90Z 4230 A		4	4	4	4		4	4				

DESCRIPTION	PART NUMBER	REAR AXLE PARTS LIST "M TO X"											
		M	N	O	P	Q	R	S	T	U	V	W	X
SHAFT & BEARING ASSY. – REAR AXLE	**4234/4725**												
R.H.	XA 4234 B	M											
L.H.	XA 4725 B	M											
R.H. – 28 splines	XA 4234 A		N	O	P	Q							
L.H. – 28 splines	XA 4725 A		N	O	P	Q							
R.H. – 31 splines	D1ZZ 4234 A						R						
L.H. – 31 splines	D1ZZ 4234 B						R						
R.H. – less rotor	PL 4234 A							S	T				
L.H. – less rotor	PL 4234 B							S	T				
GEAR – REAR AXLE DIFF. SIDE	**4236**												
	XT 4236 B	2											
Kit	C9AZ 4236 A		N	O	P	Q		S	T				
	C5AZ 4236 A						2						
BUMPER – DRIVE PINION BEARING RETAINER	**4298**												
	C5ZZ 4298 B		N	O	P	Q	R	S	T				
Washer 3/8 flat – O.N.R.	373820 S						5						
SLEEVE – AXLE SHAFT SEAL	**4A300**												
	C70Z 4A300 A						2						
GUIDE – PLATE CLUTCH	**4A323**												
	D00Z 4A323 A		4	4	4	4							
KIT – SHIM DIFF. CLUTCH	**4A324**												
	C80Z 4A324 A		N	O	P	Q		S	T				
PLATE ASSY. – DIFF. CLUTCH COMPOSITE	**4A325**												
	C80Z 4A325 B		N	O	P	Q		S	T				
PLATE – CLUTCH SPRING PRE LOAD DIFF.	**4A326**												
	XT 4419 A	M											
	C80Z 4A326 A		N	O	P	Q		S	T				
BOLT – COVER TO HOUSING	**4346**												
	ARC6DZ 4346 A	9											
BOLT – DIFF. CARRIER TO REAR AXLE	**4347**												
	C1AZ 4347 A		10	10	10	10	10	10	10				
MEMBER ASSY. – CTR. DRIVE	**4A347**												
	D00Z 4A347 A						R						
CLUTCH – HOLD OUT RING ASSY.	**4A351**												
	D00Z 4A351 A						2						
PLATE – CLUTCH SPRING PRE LOAD DIFF (REFER 4A326)	**4419**												
RETAINER & BEARING CUP ASSY. – DRIVING PINION BEARING	**4614**												
	D2SZ 4614 A		N	O	P	Q		S	T				
	C3AZ 4614 B						R						
Bolt – 3/8 – 16 x 1.12 – hex. head lock	42999 S						5						
BEARING ASSY. – REAR AXLE DRIVE PINION GEAR FRONT	**4615**												
	C0DW 4615 A	M											

DESCRIPTION	PART NUMBER	REAR AXLE PARTS LIST "M TO X"											
		M	N	O	P	Q	R	S	T	U	V	W	
CUP – REAR AXLE DRIVE PINION													
GEAR BEARING	4616												
Front	B7A 4616 A		N	O	P	Q	R	S	T				
Rear	B7A 4616 A		N	O	P	Q		S	T				
Rear	TBAA 4616 A						R						
CONE & ROLLER ASSY. – DRIVE PINION													
GEAR FRONT BEARING	4621												
Front	B7A 4621 A		N	O	P	Q	R	S	T				
Rear	B7A 4621 A		N	O	P	Q		S	T				
Rear	TBAA 4621 A						R						
CONE & ROLLER ASSY. – DRIVE													
PINION BEARING REAR	4625												
	C0DW 4625 A	M											
	B7A 4625 A		N	O	P	Q	R	S	T				
RETAINER – DRIVING PINION PILOT													
BEARING	4627												
	B7AZ 4627 A		N	O	P	Q	R	S	T				
SPACER – PINION BEARING	4662												
.466"	C4AZ 4662 A		N	O	P	Q	R						
.468"	C4AZ 4662 B		N	O	P	Q	R						
.470"	C4AZ 4662 C		N	O	P	Q	R						
.472"	C4AZ 4662 D		N	O	P	Q	R						
.474"	C4AZ 4662 E		N	O	P	Q	R						
.476"	C4AZ 4662 F		N	O	P	Q	R						
.478"	C4AZ 4662 G		N	O	P	Q	R						
.480"	C4AZ 4662 H		N	O	P	Q	R						
.484"	C4AZ 4662 K		N	O	P	Q	R						
.479"	C4AZ 4662 M		N	O	P	Q	R						
.483"	C4AZ 4662 P		N	O	P	Q	R						
.486"	C6AZ 4662 A		N	O	P	Q	R						
SHIM – REAR AXLE PINION BEARING –													
REAR – SELECTIVE FIT	4663												
.080"	ARC6DZ 4663 A	M											
.082"	ARC6DZ 4663 B	M											
.084"	ARC6DZ 4663 C	M											
.086"	ARC6DZ 4663 D	M											
.088"	ARC6DZ 4663 E	M											
.090"	ARC6DZ 4663 F	M											
.092"	ARC6DZ 4663 G	M											
.094"	ARC6DZ 4663 H	M											
.096"	ARC6DZ 4663 J	M											
.098"	ARC6DZ 4663 K	M											
.100"	ARC6DZ 4663 L	M											
Kit of shims	MGK 4663 A		N	O	P	Q	R	S	T				
'O' RING – DRIVING PINION													
BEARING RETAINER	4669												
	B7A 4669 A		N	O	P	Q	R	S	T				

DESCRIPTION	PART NUMBER	REAR AXLE PARTS LIST "M TO X"											
		M	N	O	P	Q	R	S	T	U	V	W	X
SHIM – REAR AXLE PINION BEARING													
– FRONT – SELECTIVE FIT	**4672**												
.070"	ARC6DZ 4672 AA	M											
.072"	ARC6DZ 4672 AB	M											
.074"	ARC6DZ 4672 AC	M											
.076"	ARC6DZ 4672 AD	M											
.078"	ARC6DZ 4672 AE	M											
.080"	ARC6DZ 4672 AF	M											
.082"	ARC6DZ 4672 AG	M											
.084"	ARC6DZ 4672 AH	M											
.086"	ARC6DZ 4672 AJ	M											
.088"	ARC6DZ 4672 AK	M											
.090"	ARC6DZ 4672 AL	M											
.092"	ARC6DZ 4672 AM	M											
.094"	ARC6DZ 4672 AN	M											
.096"	ARC6DZ 4672 AP	M											
.098"	ARC6DZ 4672 AQ	M											
.100"	ARC6DZ 4672 AR	M											
.102"	ARC6DZ 4672 AS	M											
.104"	ARC6DZ 4672 AT	M											
.106"	ARC6DZ 4672 AU	M											
.071"	CF 4672 C	M											
.073"	CF 4672 E	M											
.075"	CF 4672 G	M											
.077"	CF 4672 J	M											
.079"	CF 4672 L	M											
.081"	CF 4672 N	M											
SEAL ASSY. – REAR AXLE DRIVE													
PINION OIL	**4676**												
	XY 4676 A	M											
	C2AZ 4676 B		N	O	P	Q	R	S	T				
SHAFT & BEARING ASSY. – REAR													
AXLE L.H. (REFER 4234)	**4725**												
FLANGE ASSY. – UNIVERSAL JOINT													
AXLE END	**4851**												
	XY 4851 A	M											
	C3AZ 4851 L		N	O	P	Q		S	T				
	D20Z 4851 A						R						
Lockwasher – flange to pinion – not serviced	372251 S	M											
Lock nut – flange to pinion	371518 S	M	N	O	P	Q							
Lock nut – flange to pinion	375646 S						R						
Nut – flange to pinion – ¾" U.N.F.	AR 387575 S	M											
DEFLECTOR – DRIVE PINION OIL													
SEAL DUST	**4859**												
	XY 4859 A	M											
	D2SZ 4859 A		N	O	P	Q	R	S	T				
KIT – LOCKING DIFFERENTIAL (REFER													
GROUP 4026)	**4880**												
PLATE ASSY. – DIFFERENTIAL CLUTCH	**4945**												
	C80Z 4945 B		4	4	4	4		4	4				
HUB – DIFFERENTIAL GEAR CLUTCH	**4946**												
	XT 4946 A	2											
	C90Z 4946 B		N	O	P	Q		S	T				
PLATE – DIFFERENTIAL GEAR CLUTCH	**4947**												
	C80Z 4947 A		4	4	4	4		4	4				

MODEL	BODY TYPE	REMARKS	UNIT	PART NUMBER		
– – 4A001 – – HOSE – REAR AXLE VENT						
XA/B, ZF/G	All	Single exhaust w/XW 4022 A vent	1	C60W	4A001	A
XA/B, ZF/G	All	Screw – clip to body 5/16" – 18 x ½" – single exhaust ..	1	40923 S8		
XA/B, ZF/G	All	Clamp – hose – single exhaust	1	376545 S8		
XA/B, ZF/G	All	Clip – tube to body – single exhaust	1	AR 353473 S8		
– – 4338 – – VENT ASSY. (REFER ALSO 4022)						
XA/B, ZF/G	54, 65	8 cyl. – with dual exhaust	1	XA	4338	A
– – 4357 – – WEDGE REAR AXLE SPRING SEAT						
XA/B, ZF/G	All	351 c.i.d.	2	XA	4357	A
– – 4B360 – – BUSHING – REAR AXLE SPRING SEAT WEDGE						
XA/B, ZF/G	All	351 c.i.d.	2	XA	4B360	A

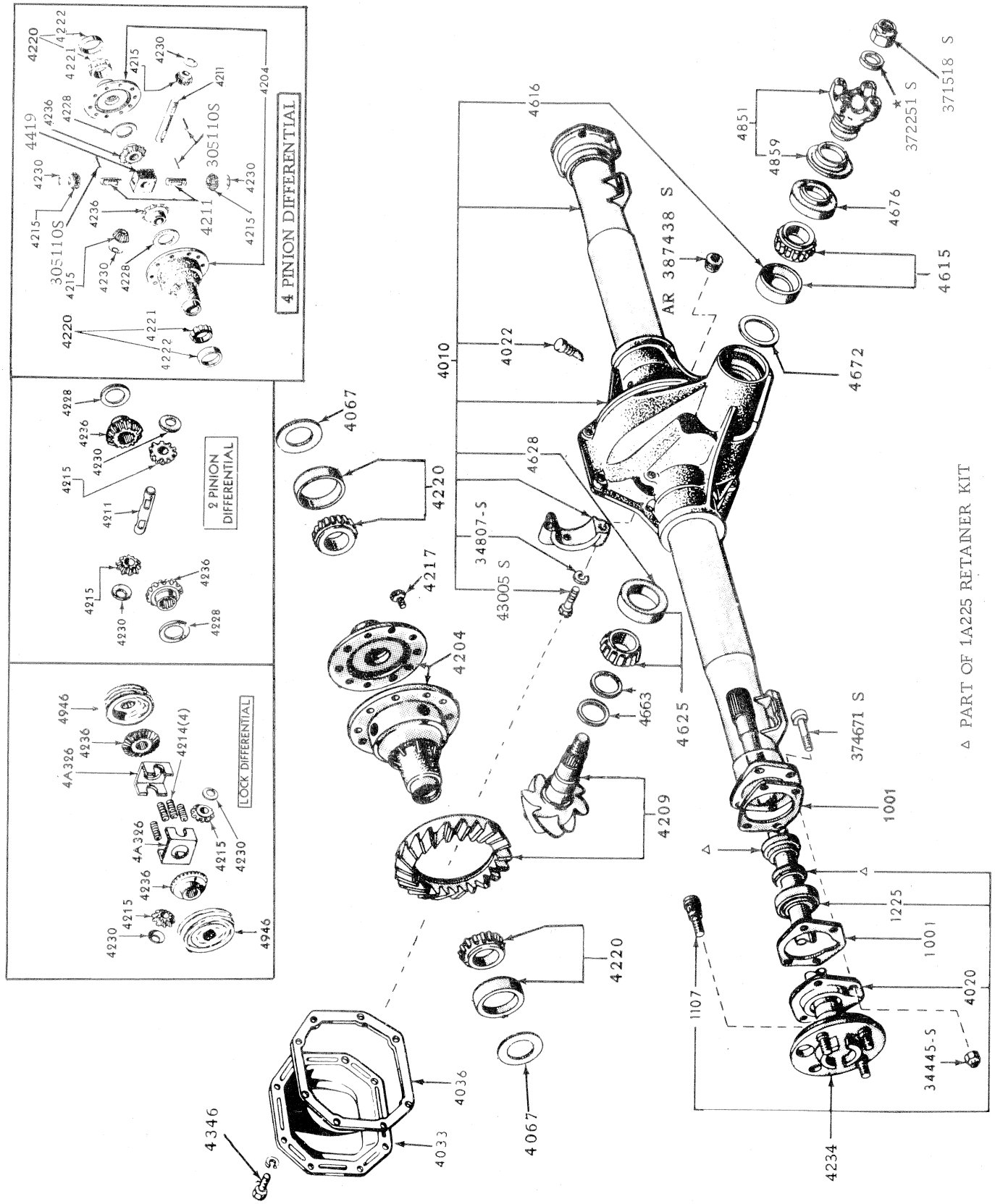

REAR AXLE - BORG WARNER

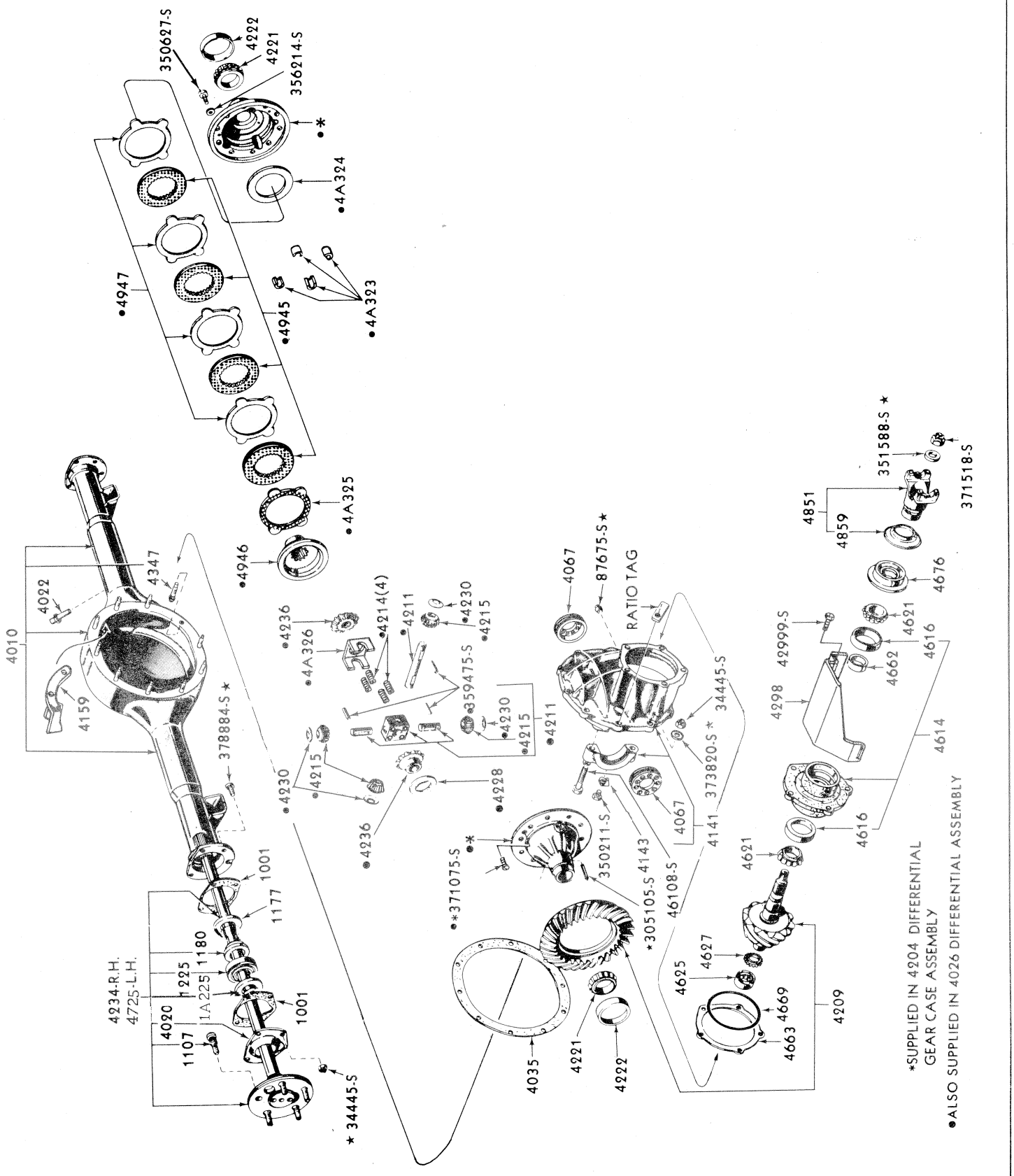

REAR AXLE — FORD

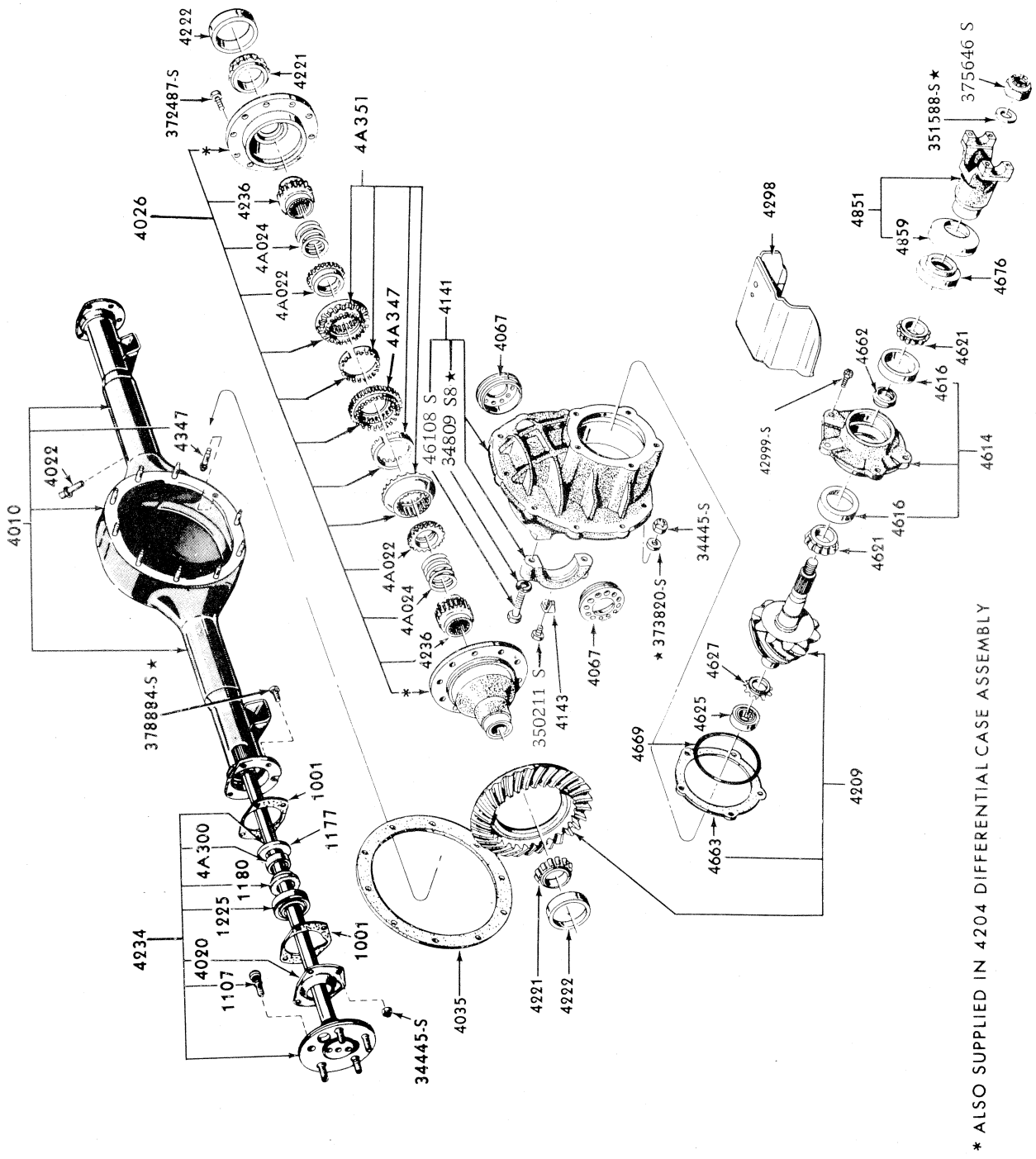

* ALSO SUPPLIED IN 4204 DIFFERENTIAL CASE ASSEMBLY

REAR AXLE - DETROIT LOCKER

DRIVE SHAFT & RELATED PARTS CHART
XA/ZF

Body Type	Colour Code	Engine		Transmission						"U" Joint			Knuckle & Plug Code	Diam.	Length	Part Number
		No. Cyl.	C.I.D.	Man.		Auto.				Size	Code					
				3S	4S	B/W	C4	C6	Fmx		Frt	Rr				
54A/B/C/D, 65B/D	1 White	6	200	x		x					A	A	1		52.90	XA 4602 AA
54A/B/C/D, 65B/D	1 White	6	250	x	x	x	x				A	A	1		52.90	XA 4602 AA
54A/B/C/D, 65B/D	1 White	8	302	x	x		x				A	A	1		52.90	XA 4602 AA
54A/B/C/D @	1 Yellow	6	250 (1V)	x							A	A	1	2.75	52.12	XY 4602 D
54E/G, 66, 71, 78	1 Red	6	200/250	x	x	x					A	A	1		57.87	XA 4602 CA
54E/G, 66, 71, 78	1 Red	8	302	x	x		x				A	A	1		57.87	XA 4602 CA
54A/B/C/D, 65B/D	1 Blue & 1 Green	8	351 (2V)		x		x				B	C	3		52.40	XA 4602 FA
54H, 65H	1 Blue & 1 Green	8	351 (4V)		x						B	C	3		52.40	XA 4602 FA
66	1 Red & 1 Yellow	8	351 (2V)		x						B	C	3		57.22	XA 4602 GA
54E/G, 66	3 Orange	8	351 (2V)				x			1310	B	C	3	3.50	57.50	ZC 4602 DA
54H, 65H	1 Yellow	8	351 (4V)					x			B	C	2		48.75	XA 4602 EA
54H, 65H	2 Green	8	351 (4V)		x						B	C	3	3.50	52.50	XW 4602 R
54H, 65H	2 Grey	8	351 (4V)						x	1310	B	C	2	3.00	52.75	XW 4602 P
54H, 65H HO	Green & Pink	8	351		x					1330	D	E	4	3.50	49.00	ARD00A 4602 BA
54A/B/C (Police & Taxi)	2 White	6	200/250	x	x	x	x			7260	F	F			52.90	XA 4602 JA
54A/B/C (Police & Taxi)	2 White	8	302	x	x		x			7260	F	F			52.90	XA 4602 JA
54E/G, 66, 78 (Police & Taxi)	2 Red	6	200/250	x	x	x	x			7260	F	F			57.87	XA 4602 LA
54E/G, 66, 78 (Police & Taxi)	2 Red	8	302	x	x		x			7260	F	F			57.87	XA 4602 LA

@ Used on 180 vehicles only. With manual transmission assembly XY 7003 EA.

UNIVERSAL JOINT KITS

Engine	Remarks	Code	Part Number
6 cyl. & 302 c.i.d.	Front & Rear	A	XW 4635 A
351 c.i.d.	Front	B	XW 4635 C
351 c.i.d.	Rear	C	XW 4635 D
351 c.i.d. 4V	GTHO—Front	D	C3AZ 4635 G
351 c.i.d. 4V	GTHO—Rear	E	C3AZ 4635 H
351 c.i.d. 2V	Police & Taxi—Front & Rear	F	XA 4635 AA

YOKE & PLUG ASSEMBLIES

Engine	Remarks	Code	Part Number
6 cyl. & 302 c.i.d.		1	XW 4841 D
351 c.i.d. 4V	Auto. Trans.	2	XW 4841 E
351 c.i.d. 4V	Man. Trans.	3	XW 4841 F
351 c.i.d. 2V		3	XW 4841 F
351 c.i.d. 4V	GTHO	4	C7SZ 4841 A

DRIVE SHAFT & RELATED PARTS CHART
XB/ZG

Body Type	Colour Code	Engine		Transmission						"U" Joint			Knuckle & Plug Code	Diam.	Length	Part Number
		No. Cyl.	C.I.D.	Man.		Auto.				Size	Code					
				3S	4S	B/W	C4	C6	Fmx		Frt	Rr				
54A/B/C/D, 65B/D	1 White	6	200	x		x					A	A	1		52.90	XA 4602 AA
54A/B/C/D, 65B/D	1 White	6	250	x	x	x	x				A	A	1		52.90	XA 4602 AA
54A/B/C/D, 65B/D	1 White	8	302	x	x		x				A	A	1		52.90	XA 4602 AA
54E/G, 66, 71, 78	1 Red	6	200/250	x	x	x					A	A	1		57.87	XA 4602 CA
54E/G, 66, 71, 78	1 Red	8	302	x	x		x				A	A	1		57.87	XA 4602 CA
54A/B/C/D, 65B/D	1 Blue & 1 Green	8	351 (2V)		x		x				B	C	3		52.40	XA 4602 FA
54H, 65H	1 Blue & 1 Green	8	351 (4V)		x						B	C	3		52.40	XA 4602 FA
66, 78	1 Red & 1 Yellow	8	351 (2V)		x						B	C	3		57.22	XA 4602 GA
54E/G, 66, 78	3 Orange	8	351 (2V)				x			1310	B	C	3	3.50	57.50	ZC 4602 DA
54H, 65H	2 Grey	8	351 (4V)						x	1310	B	C	2	3.00	52.75	XW 4602 P
54A/B/C/D, 65B/D (Police & Taxi)	2 Blue & 2 Green	8	351 (2V)		x		x				G	H	3	3.25	52.75	XA 4602 KA
54E/G, 66, 78 (Police & Taxi)	2 Orange	8	351 (2V)		x		x				G	H	3	3.50	57.50	XA 4602 MA
54H, 65H HO	Green & Pink	8	351		x					1330	D	E	4	3.50	49.00	ARD00A 4602 BA

@ Used on 180 vehicles only. With manual transmission assembly XY-7003-EA.

UNIVERSAL JOINT KITS

Engine	Remarks	Code	Part Number
6 cyl. & 302 c.i.d.	Front & Rear	A	XW 4635 A
351 c.i.d.	Front	B	XW 4635 C
351 c.i.d.	Rear	C	XW 4635 D
351 c.i.d. 4V	GTHO—Front	D	C3AZ 4635 G
351 c.i.d. 4V	GTHO—Rear	E	C3AZ 4635 H
351 c.i.d. 2V	Police & Taxi — Front	G	XB 4635 A
351 c.i.d. 2V	Police & Taxi — Rear	H	XB 4635 B

YOKE & PLUG ASSEMBLIES

Engine	Remarks	Code	Part Number
6 cyl. & 302 c.i.d.		1	XW 4841 D
351 c.i.d. 4V	Auto. Trans.	2	XW 4841 E
351 c.i.d. 4V	Man. Trans.	3	XW 4841 F
351 c.i.d. 2V		3	XW 4841 F
351 c.i.d. 4V	GTHO	4	C7SZ 4841 A

MODEL	BODY TYPE	REMARKS	UNIT	PART NUMBER		
– – 4529 – – U BOLT – UNIVERSAL JOINT						
XA/B, ZF/G	All	6 cyl. & 302 c.i.d.	2	XY	4529	A
XA/B, ZF/G	All	351 c.i.d.	2	C1AZ	4529	A
XA/B, ZF/G	All	6 cyl. & 302 c.i.d. – washer ¼" lock – att. 'U' bolt to rear axle	4	34805 S78		
XA/B, ZF/G	All	351 c.i.d. – nut 5/16" lock – att. 'U' bolt & D/shaft to rear axle	4	34443 ES8C		
XA/B, ZF/G	All	6 cyl. & 302 c.i.d. – bolt – att. drive shaft clamp to rear axle yoke	4	V 387860 S36		
– – 4730 – – BUMPER – REAR AXLE						
XA/B	54A,B,D,C, 65B,D	6 cyl. & 302 c.i.d. – pinion/carrier housing stop	1	XA	4730	A
XA/B, ZF/G	54E,G, 66, 71, 78	6 cyl. & 302 c.i.d. – pinion carrier hsg. stop	1	ARC6DA	4730	D
XA/B, ZF/G	All	351 c.i.d. – pinion/carrier housing stop	1	XA	4730	B
XA/B, ZF/G	All	Axle housing	2	XA	4730	AA
XA/B, ZF/G	All	6 cyl. & 302 c.i.d. – screw 5/16" – 18 x ¾" – att. bumper to underbody	a/r	41209 S8		
– – 4731 – – BRACKET – REAR AXLE BUMPER						
XA/B, ZF/G	All	Upper	2	XA	4731	A
XA/B	54, 65	R.H. – lower	1	XA	4731	B
XA/B	54, 65	L.H. – lower	1	XA	4731	E
XA/B	66, 71, 78	R.H. – lower	1	XA	4731	D
XA/B	66, 71, 78	L.H. – lower	1	XA	4731	C
ZF/G	All	R.H. – lower	1	ZF	4731	B
ZF/G	All	L.H. – lower	1	ZF	4731	A
XA/B, ZF/G	All	Washer – 5/16" lock – att. bracket to rear axle	4	34806 S36		
XA/B, ZF/G	All	Bolt – 5/16" – 18 x ¾" – att. bracket to rear axle	4	20346 S78		
– – 4A924 – – BRACKET & BUMPER ASSY. – REAR AXLE PINION						
XA/B, ZF/G	All	351 c.i.d.	1	XA	4A924	AA

MODEL	BODY TYPE	REMARKS	UNIT	PART NUMBER

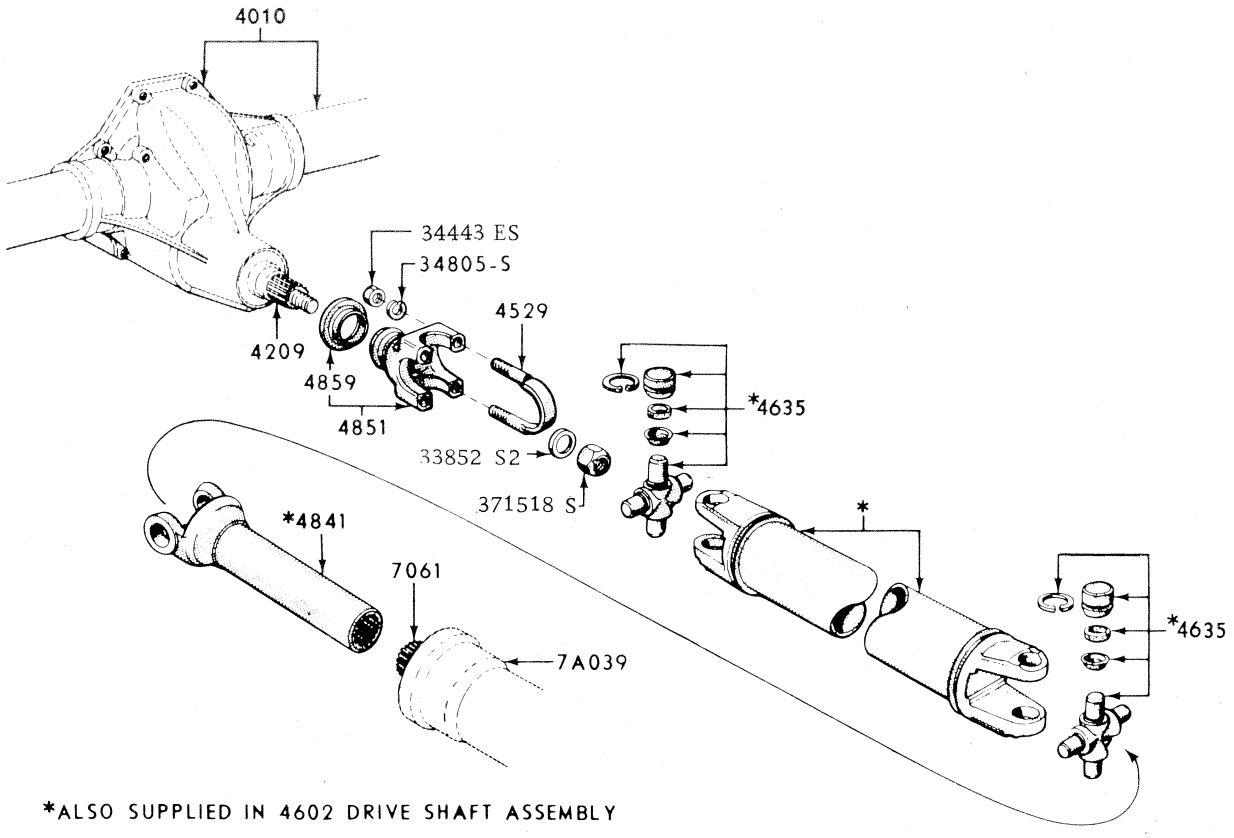

*ALSO SUPPLIED IN 4602 DRIVE SHAFT ASSEMBLY

DRIVE SHAFT AND RELATED PARTS

MODEL	BODY TYPE	REMARKS	UNIT	PART NUMBER		
– – 5059 – – SUPPORT ASSY. – FRAME ENGINE REAR						
XA/B, ZF/G	All		1	XA	5059	A
XA/B, ZF/G	All	Pin – cotter – O.N.R.	2	AR 387268 S2		
– – 5230/2 – – MUFFLER ASSY.						
XA/B	All	200/250 c.i.d. 1V	1	XA	5230	DB
XA, ZF	All	250 c.i.d. 2V	1	XA	5230	GB
ZF/G	All	250 c.i.d. 1V	1	ZF	5230	CB
XA/B	All	302 c.i.d. – single exhaust	1	XA	5230	EB
XA/B	All	351 c.i.d. 2V – single exhaust	1	XA	5230	FB
ZF/G	All	302/351 c.i.d. 2V – single exhaust	1	ZF	5230	DC
XA/B, ZF/G	All	302/351 c.i.d. 2V – R.H. – dual exhaust w/resonator – to 12/73	1	XA	5230	CB
XA, ZF	All	302/351 c.i.d. 2V – L.H. – dual exhaust w/resonator – to 5/72	1	XA	5232	A
XA/B, ZF/G	All	302/351 c.i.d. 2V – L.H. – dual exhaust w/resonator – from 5/72 to 12/73	1	XA	5232	BB
XA/B	All	351 c.i.d. 4V – R.H. – dual exhaust w/resonator – to 12/73	1	XA	5230	BB
XA/B	All	351 c.i.d. 4V – L.H. – dual exhaust w/resonator – to 12/73	1	XA	5232	AB
XB, ZG	All	302/351 c.i.d. – R.H. – dual exhaust w/resonator – from 1/74	1	XB	5230	A
XB, ZG	All	302/351 c.i.d. – L.H. – dual exhaust w/resonator – from 1/74	1	XB	5232	A
– – 5B230 – – COLLECTOR – EXHAUST						
XA/B	65H	With extractor type exhaust manifolds	1	XA	5B230	AA
– – 5246 – – PIPE ASSY. – MUFFLER INLET						
XA/B	All	200/250 c.i.d.	1	XY	5246	CA
XA/B	All	302 c.i.d. – single exhaust	1	XA	5246	BC
XA/B	All	351 c.i.d. – single exhaust	1	XA	5246	CC
XA/B, ZF/G	All	302/351 c.i.d. 2V – dual exhaust	1	XA	5246	DC
XA/B	All	351 c.i.d. 4V – dual exhaust	1	XA	5246	AB
ZF	All	250 c.i.d. – to 3/72	1	ZF	5246	A
ZF/G	All	250 c.i.d. – from 3/72	1	ZF	5246	AC
ZF/G	All	302/351 c.i.d. – single exhaust – to 2/74	1	ZF	5246	CB
ZG	All	302/351 c.i.d. – single exhaust – from 2/74	1	ZF	5246	CH
XA/B, ZF/G	All	6 cyl. – stud – 7/16" – 14 x 2.25" – att. pipe to exh. manifold	4	380345 S100		
XA/B, ZF/G	All	302/351 c.i.d. – stud – 7/16" – 14 x 2.25" – att. exh. manifold to pipe	4	V 388409 S100		
XA/B, ZF/G	All	Nut – 7/16" – 14 lock – exhaust pipe to manifold	a/r	34672 S		
– – 5A246/7 – – BRACKET & INSULATOR ASSY. – FRONT MUFFLER OUTLET PIPE						
XA/B	54A,B,D,C, 65	Single exhaust	1	XA	5A246	A
XA/B, ZF/G	54E,G, 66, 71, 78	Single exhaust	1	XA	5A246	B
XA/B	54A,B,C,D,H, 65	Dual exhaust	2	XA	5A246	C
ZF/G	54E,G	Dual exhaust	2	ZF	5A246	A
XA/B, ZF/G	All	Screw – 3/8" – 16 x 5/8" – att. 5A246 to body	3	40954 S36		
– – 5B246/7 – – BRACKET & INSULATOR ASSY. – REAR MUFFLER OUTLET PIPE						
XA/B	54A,B,C,D, 65B,D	R.H. – dual & single exhaust	1	XA	5B246	A
XA/B	54A,B,C,D, 65B,D	L.H. – dual exhaust	1	XA	5B247	A
ZF/G	All	R.H. – dual & single exhaust	1	ZF	5B246	A
ZF/G	All	L.H. – dual exhaust	1	ZF	5B247	A
XA/B	54H, 65H	R.H.	1	XA	5B246	E
XA/B	54H, 65H	L.H.	1	XA	5B247	D
XA/B	71		1	XA	5B246	B
XA/B	66, 78		1	XA	5B246	C
– – 5252 – – CLAMP & U BOLT ASSY. – MUFFLER PIPE						
XA/B, ZF/G	All	2-1/8" dia.	a/r	XW	5252	A
XA/B, ZF/G	All	2-3/8" dia.	a/r	XW	5252	C
XA/B, ZF/G	All	2-5/8" dia.	a/r	XW	5252	B

MODEL	BODY TYPE	REMARKS	UNIT	PART NUMBER		
– – 5255/6 – – PIPE – MUFFLER OUTLET						
XA	54, 65	200/250/302 c.i.d. – to 5/73	1	XA	5255	AA
XA/B	54, 65	200/250/302 c.i.d. – from 5/73	1	XA	5255	AC
XA	66, 78	200/250/302 c.i.d. – to 5/73	1	XA	5255	EA
XA/B	66, 78	200/250/302 c.i.d. – from 5/73	1	XA	5255	CC
XA	71	200/250/302 c.i.d. – to 5/73	1	XA	5255	BA
XA/B	71	200/250 c.i.d. – from 5/73	1	XA	5255	FB
XA/B	71	302 c.i.d. – single exhaust – from 5/73	1	XA	5255	FB
XA	54, 65	351 c.i.d. – single exhaust – to 5/73	1	XA	5255	DA
XA/B	54, 65	351 c.i.d. – single exhaust – from 5/73	1	XA	5255	HA
XA/B	66, 78	351 c.i.d. – single exhaust	1	XA	5255	DC
XA	54, 65	302/351 c.i.d. 2V – R.H. – dual exhaust – to 5/73	1	XA	5255	GA
XA/B	54, 65	302/351 c.i.d. 2V – R.H. – dual exhaust – from 5/73	1	XA	5255	N
XA	54, 65	302/351 c.i.d. 2V – L.H. – dual exhaust – to 5/73	1	XA	5256	AA
XA/B	54, 65	302/351 c.i.d. 2V – L.H. – dual exhaust – from 5/73	1	XA	5256	AB
XA	54, 65	351 c.i.d. 4V – R.H. – dual exhaust – to 5/73	1	XA	5255	KA
XA/B	54, 65	351 c.i.d. 4V – R.H. – dual exhaust – from 5/73	1	XA	5255	GB
XA	54, 65	351 c.i.d. 4V – L.H. – dual exhaust – to 5/73	1	XA	5256	DA
XA/B	54, 65	351 c.i.d. 4V – L.H. – dual exhaust – from 5/73	1	XA	5256	DB
ZF	All	250 c.i.d. – to 5/73	1	ZF	5255	AA
ZF/G	All	250 c.i.d. – from 5/73	1	ZF	5255	AD
ZF	All	302/351 c.i.d. – single exhaust – to 5/73	1	ZF	5255	BC
ZF/G	All	302/351 c.i.d. – single exhaust – from 5/73	1	ZF	5255	BD
ZF/G	All	302/351 c.i.d. – R.H. – dual exhaust	1	ZF	5255	CE
ZF/G	All	302/351 c.i.d. – L.H. – dual exhaust	1	ZF	5256	AE
– – 5263 – – PIPE – MUFFLER OUTLET EXTENSION						
XA/B	65H, 54H		2	XA	5263	AA
XA/B, ZF/G	All exc. 54H, 65H		1 or 2	XA	5263	B
– – 5270 – – CLAMP – MUFFLER INLET PIPE						
XA/B, ZF/G	All	2-1/8" dia.	a/r	C60A	5270	C
– – 5A272 – – CLAMP – MUFFLER OUTLET PIPE						
XA/B, ZF/G	All exc. 54H, 65H	2-1/8" dia.	1	XW	5A272	A
XA/B	54H, 65H	1-7/8" dia.	2	XA	5A272	A
– – 5281 – – INSULATOR – MUFFLER OUTLET PIPE						
XA/B, ZF/G	All exc. 54H, 65H		2	ARC6DA	5281	B
XA/B	54H, 65H		2	XA	5281	AA
– – 5290 – – SHIELD – EXHAUST HEAT						
XA/B	65	With single exhaust	1	XA	5290	AB

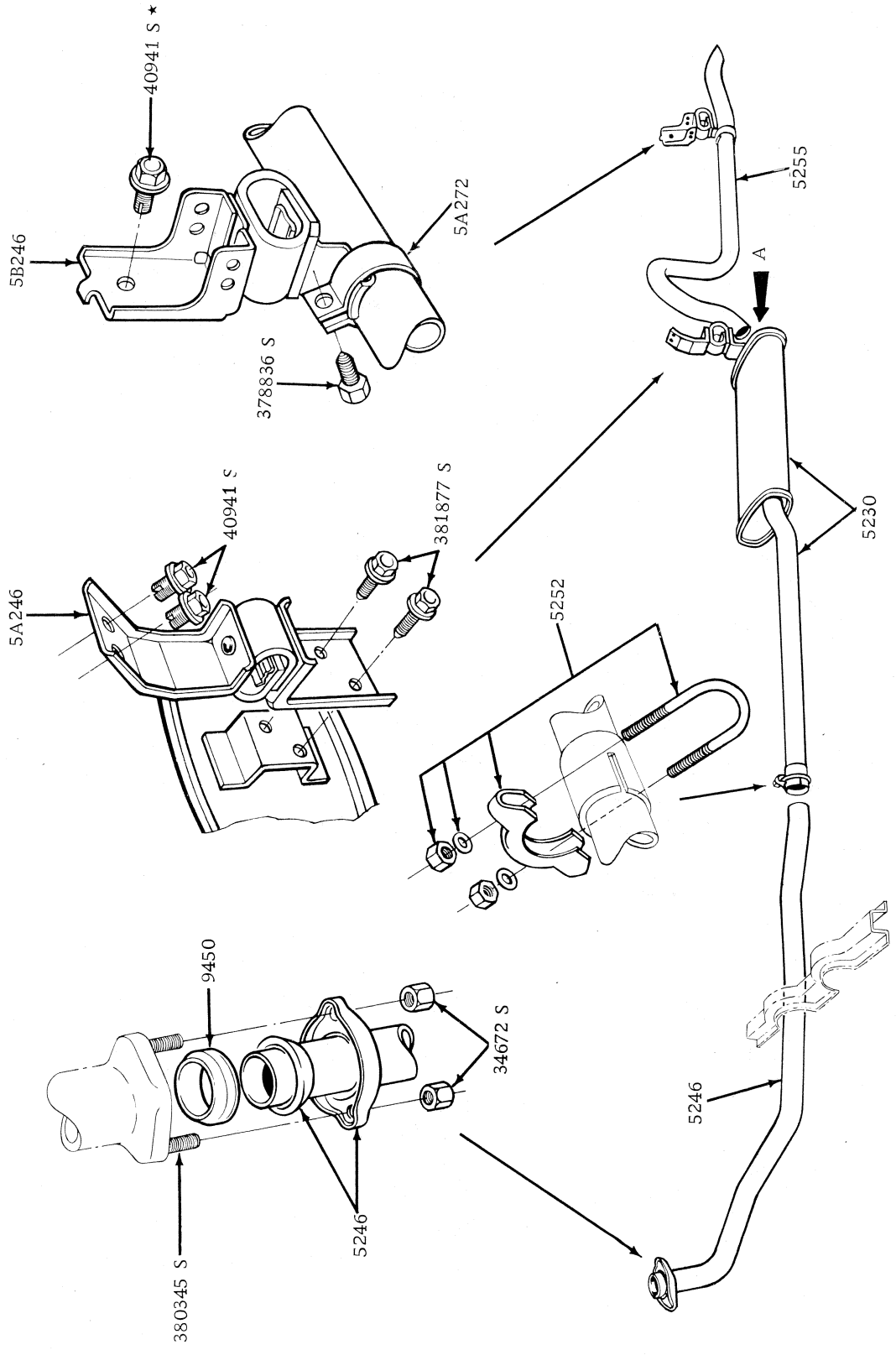

BODY TYPE 54, 65.

SINGLE EXHAUST SYSTEM FALCON SEDAN 200/250 1V

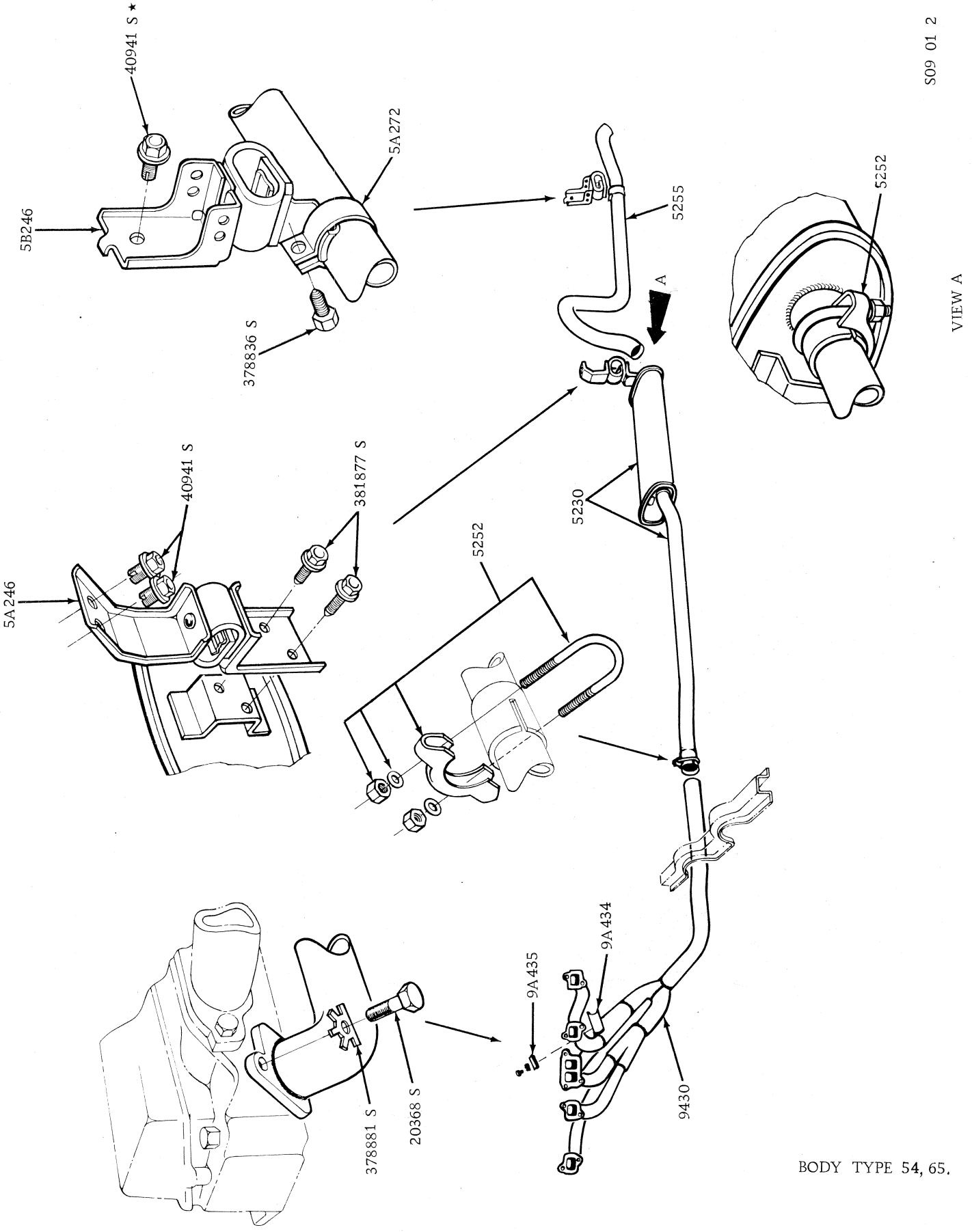

BODY TYPE 54, 65.

SINGLE EXHAUST SYSTEM FALCON SEDAN 250 CID 2V

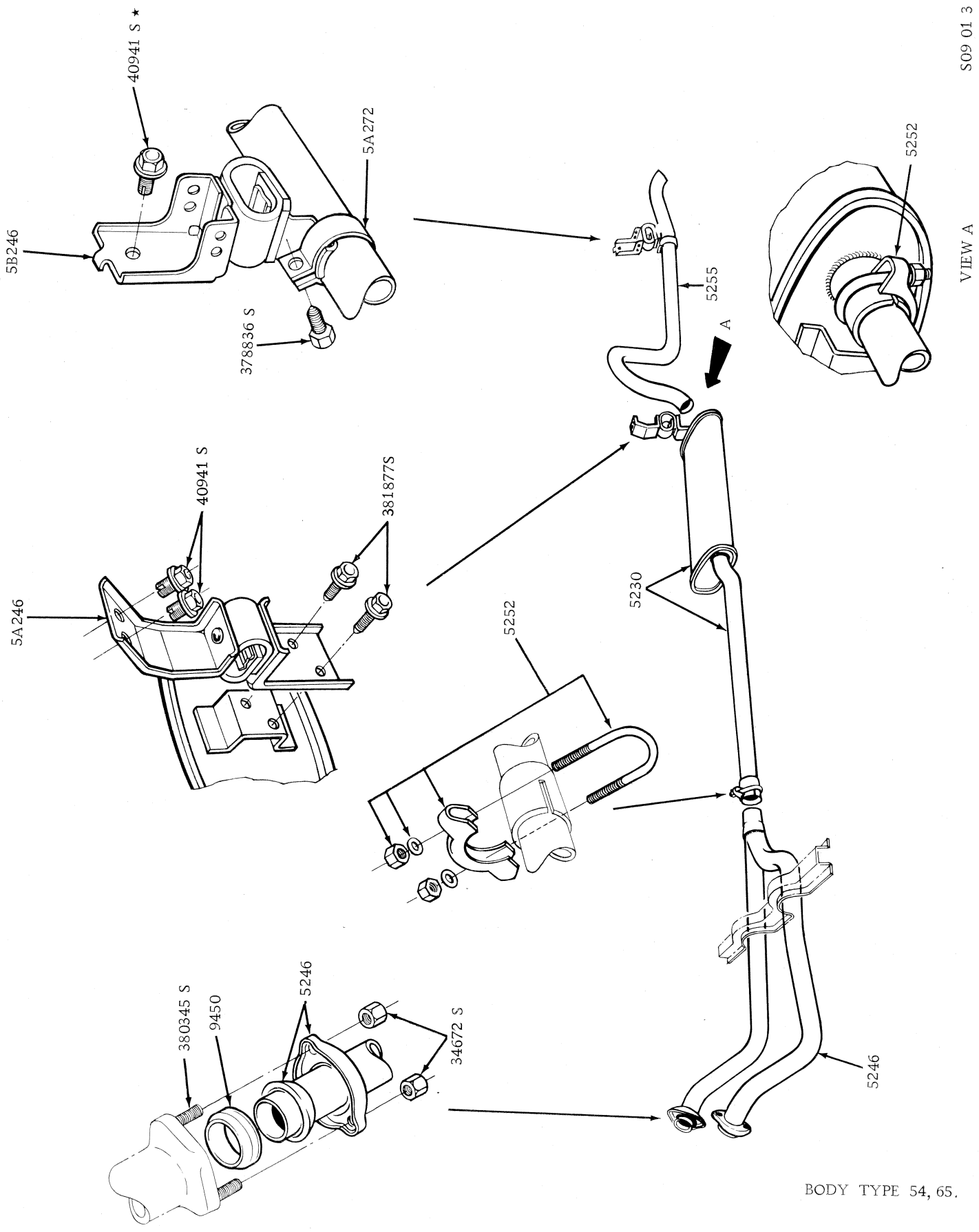

SINGLE EXHAUST SYSTEM FALCON SEDAN 302/351 2V

S09 01 4

VIEW A

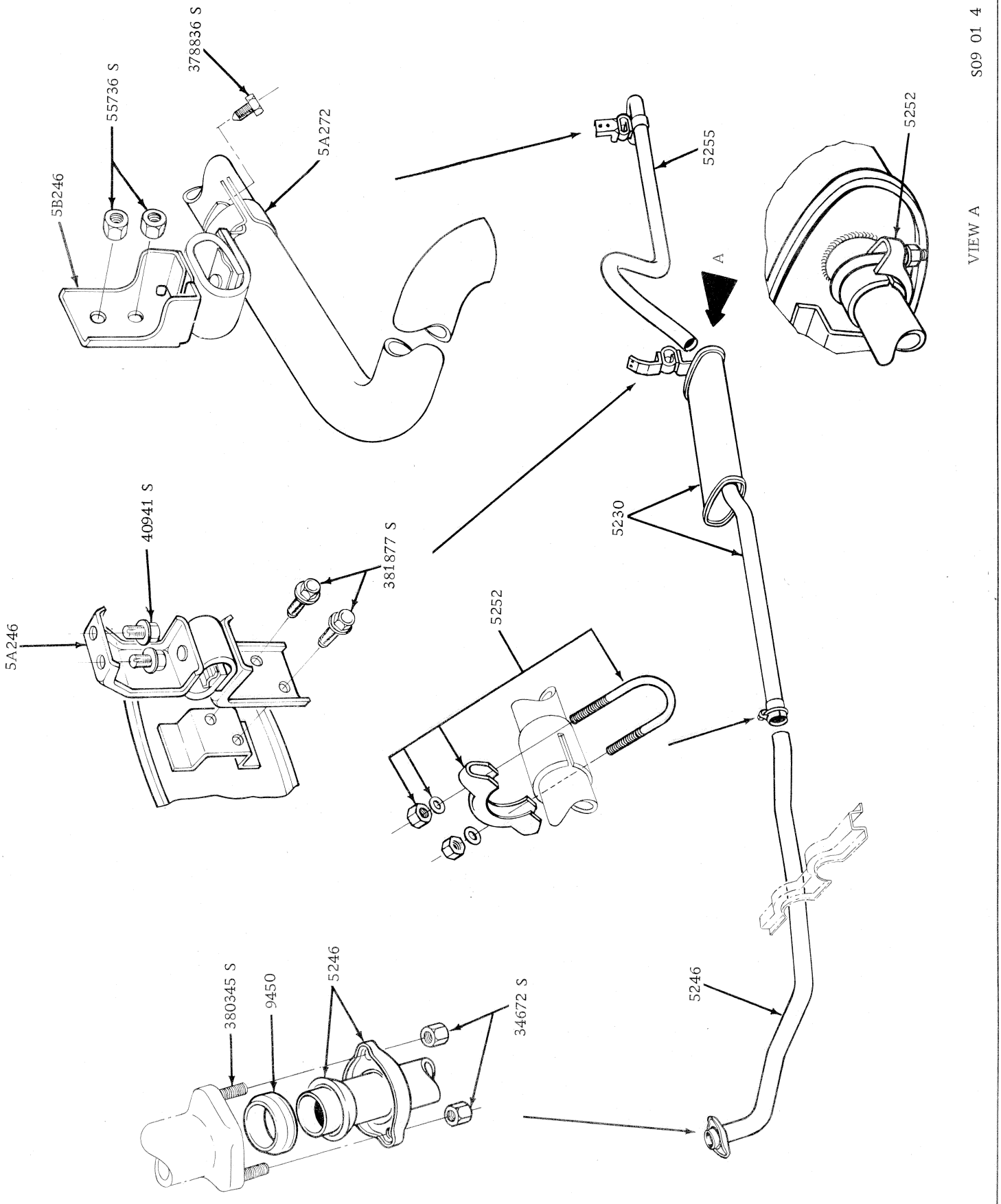

BODY TYPE 71

SINGLE EXHAUST SYSTEM FALCON WAGON 200/250 IV

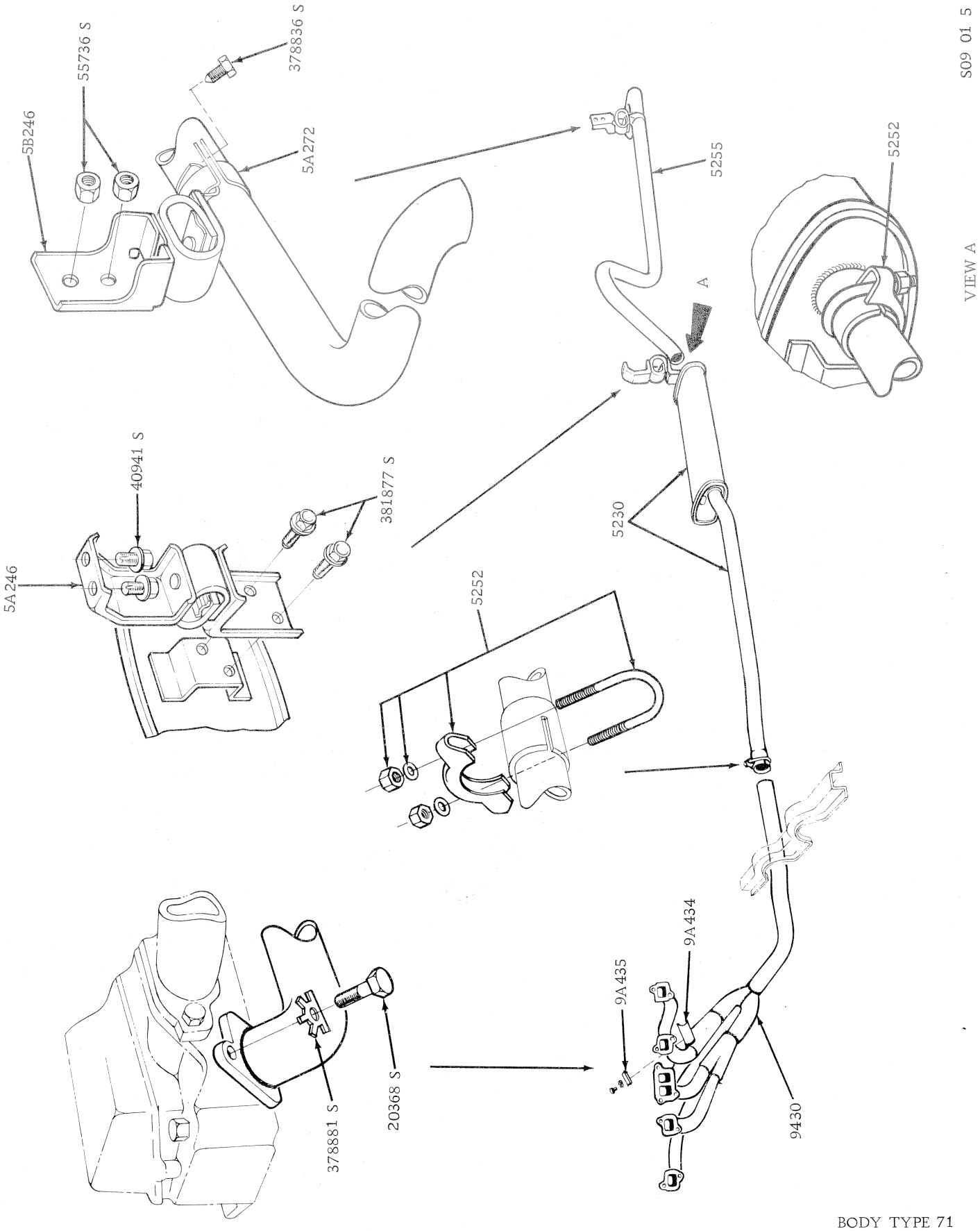

BODY TYPE 71

SINGLE EXHAUST SYSTEM FALCON WAGON 250 CID 2V

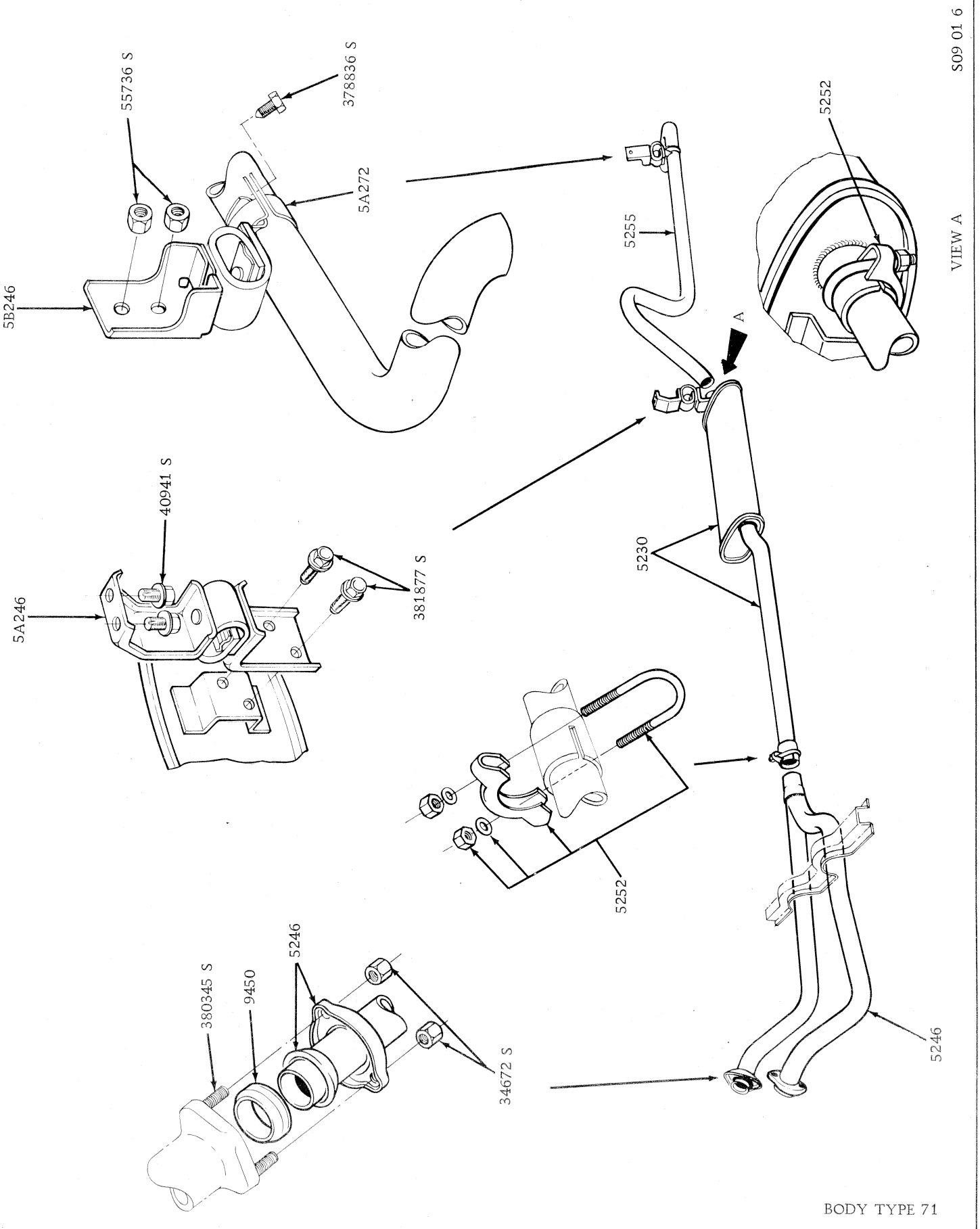

SINGLE EXHAUST SYSTEM FALCON WAGON 302 CID

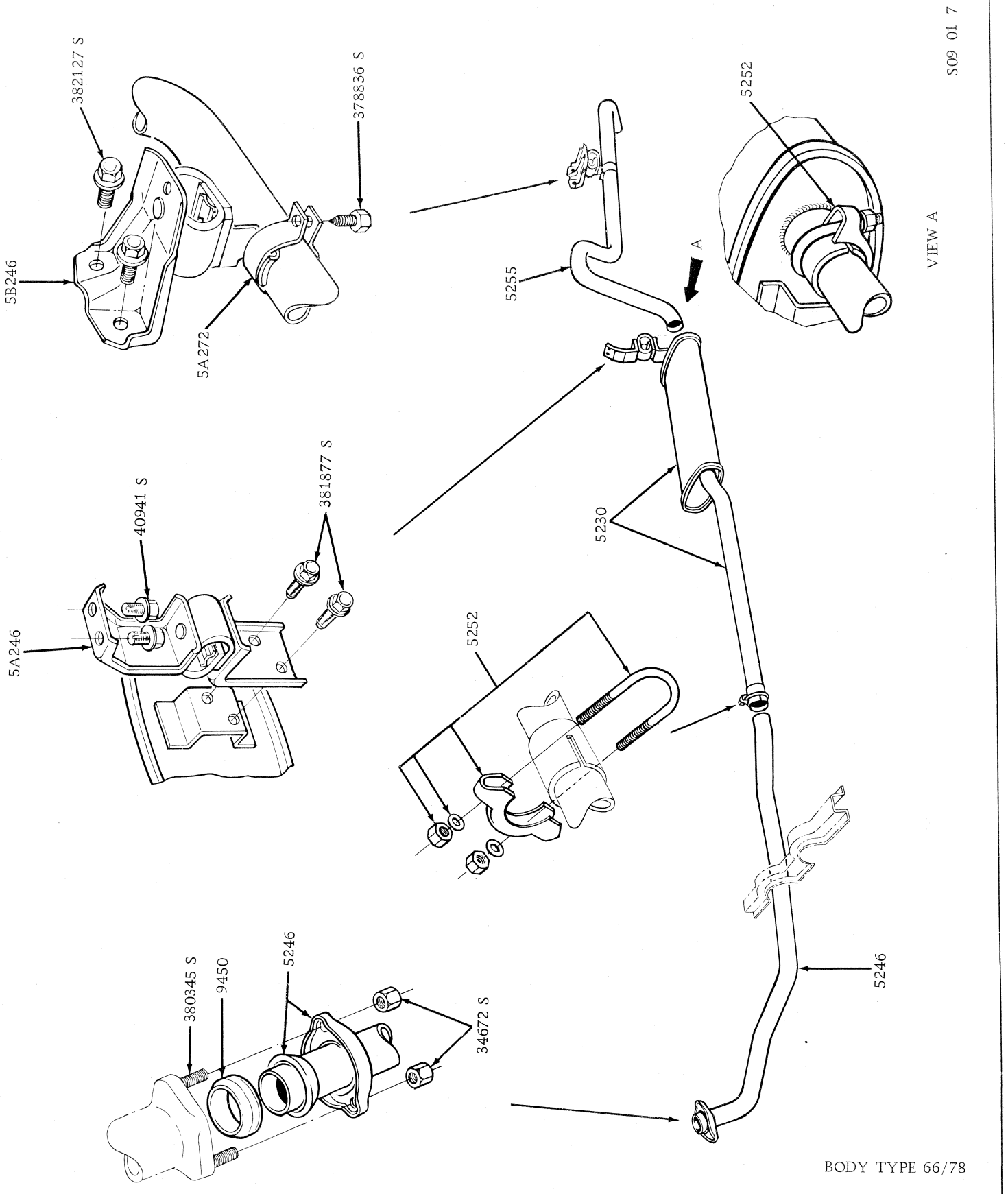

SINGLE EXHAUST SYSTEM UTE & VAN 6 CYL 1V

S09 01 8

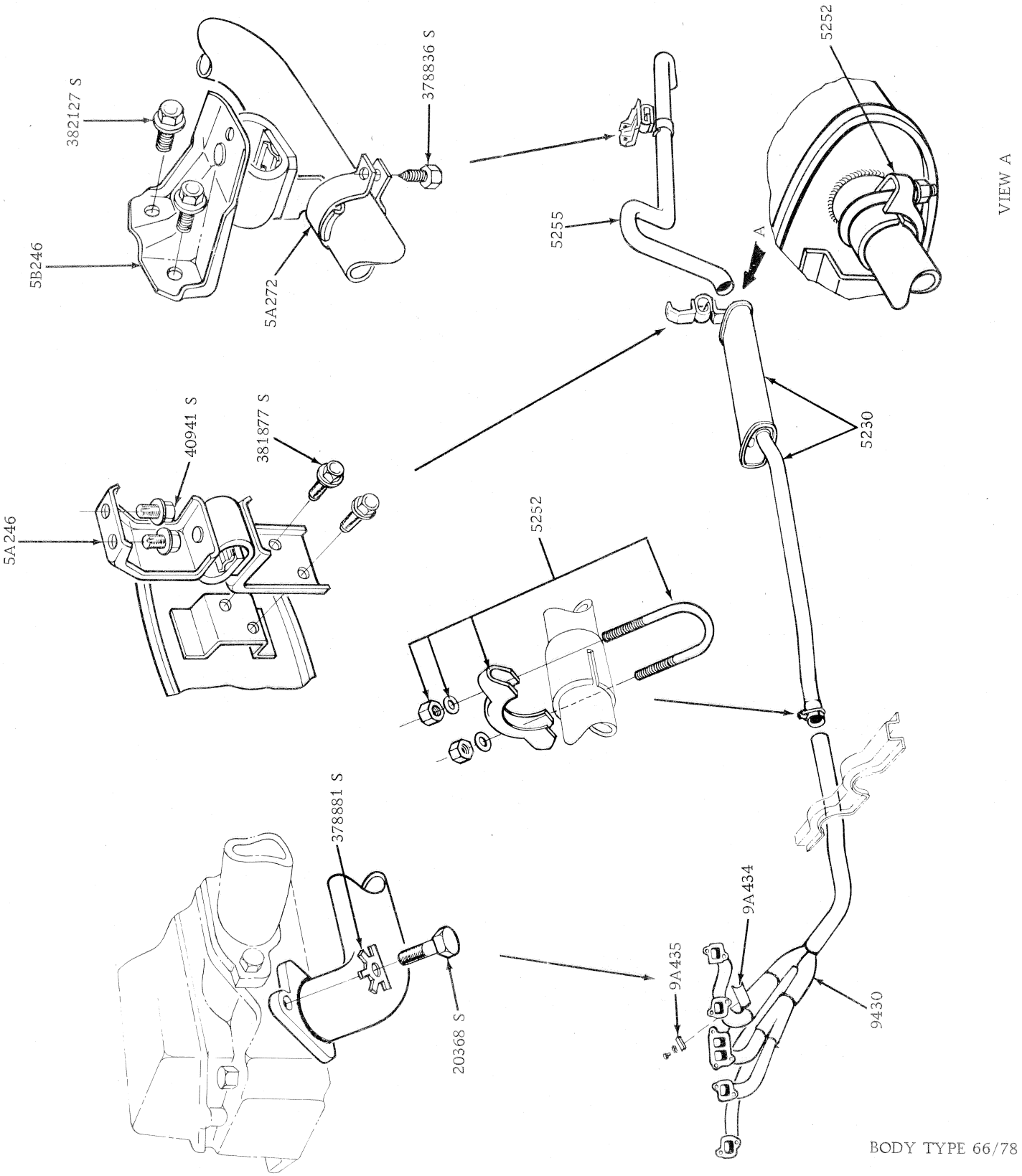

SINGLE EXHAUST SYSTEM UTE & VAN 250 CID 2V

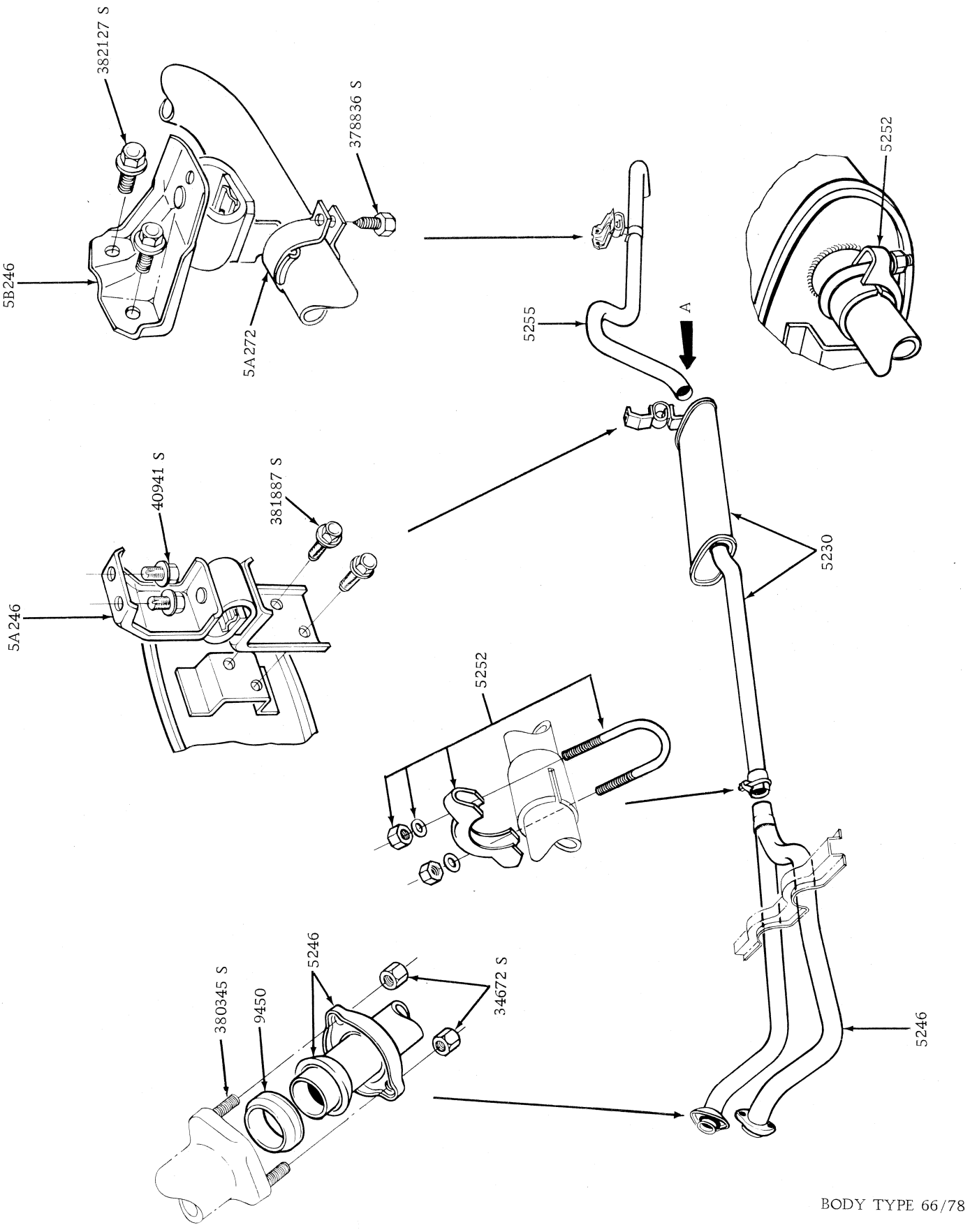

SINGLE EXHAUST SYSTEM UTE & VAN 8CYL 2V

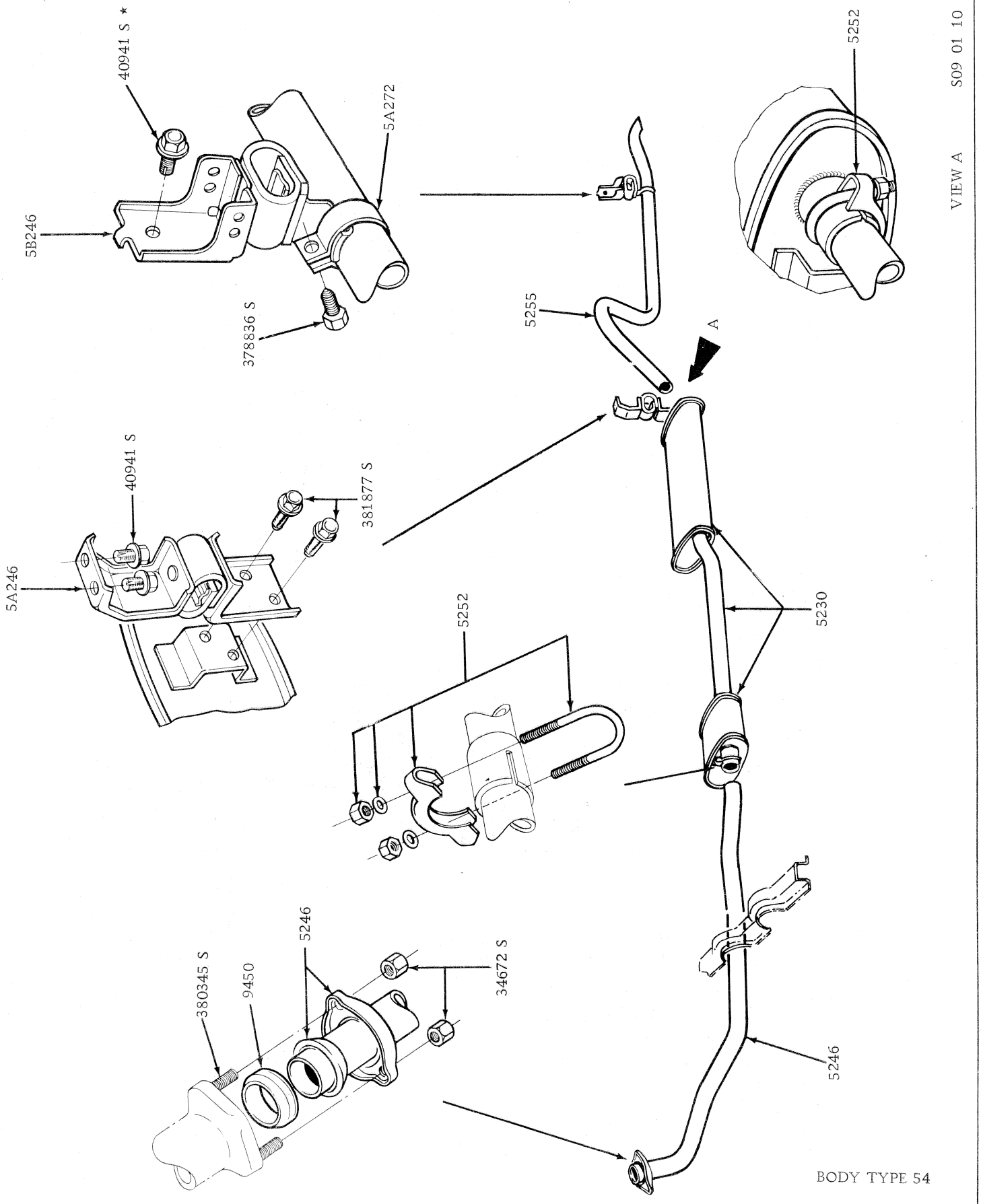

SINGLE EXHAUST SYSTEM FAIRLANE 250 CID 1V

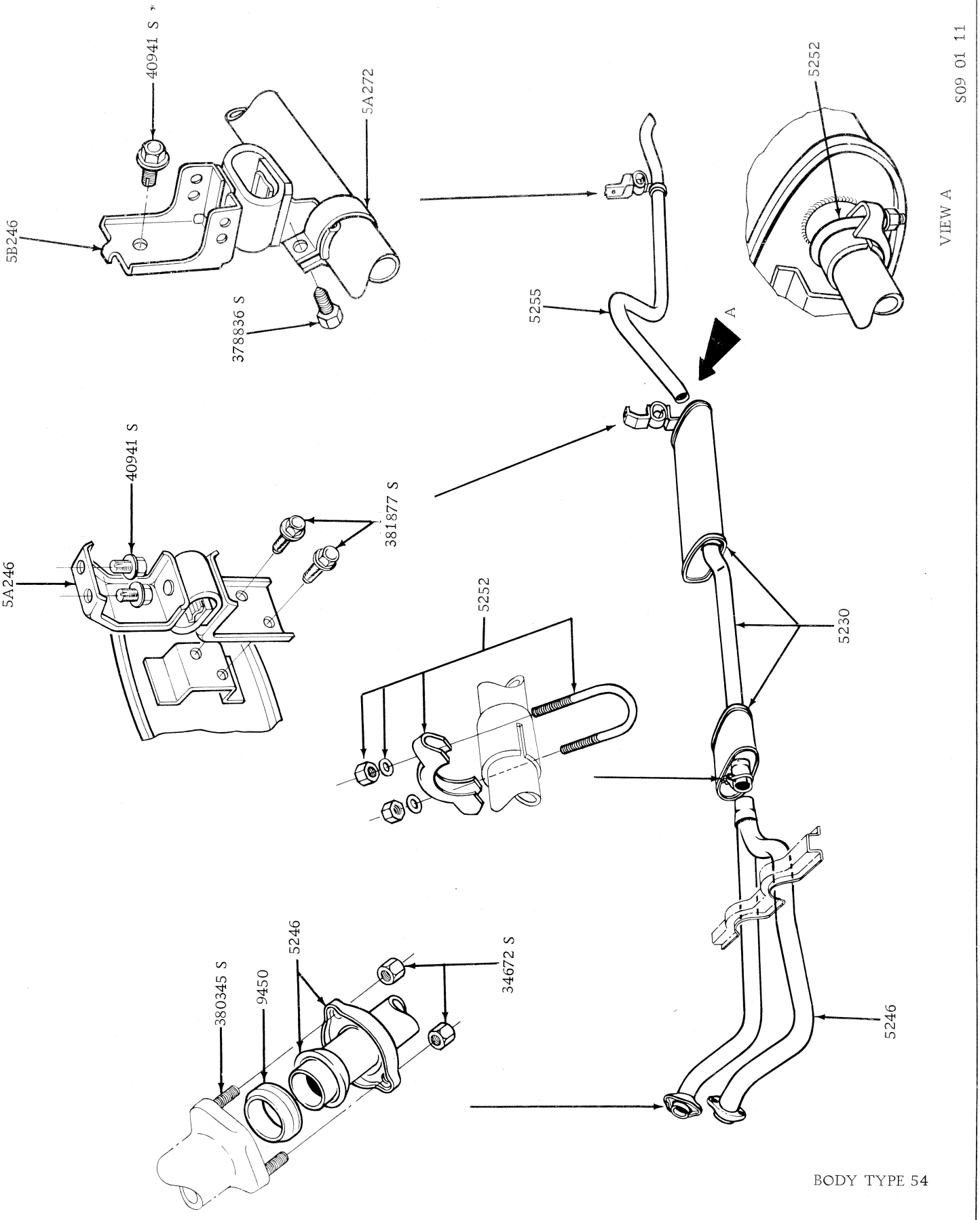

SINGLE EXHAUST SYSTEM FAIRLANE 8 CYL 2V

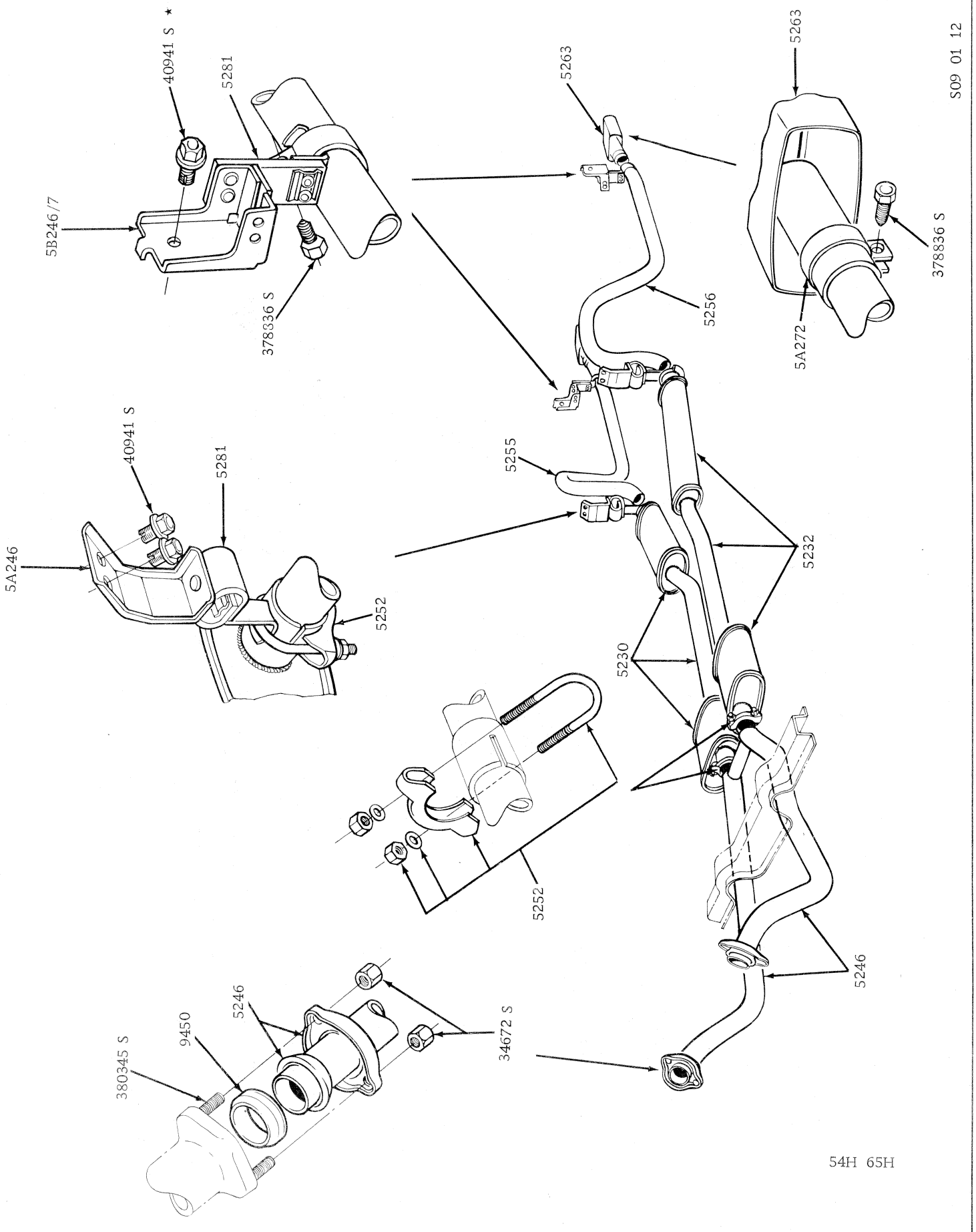

EXHAUST SYSTEM FALCON G T

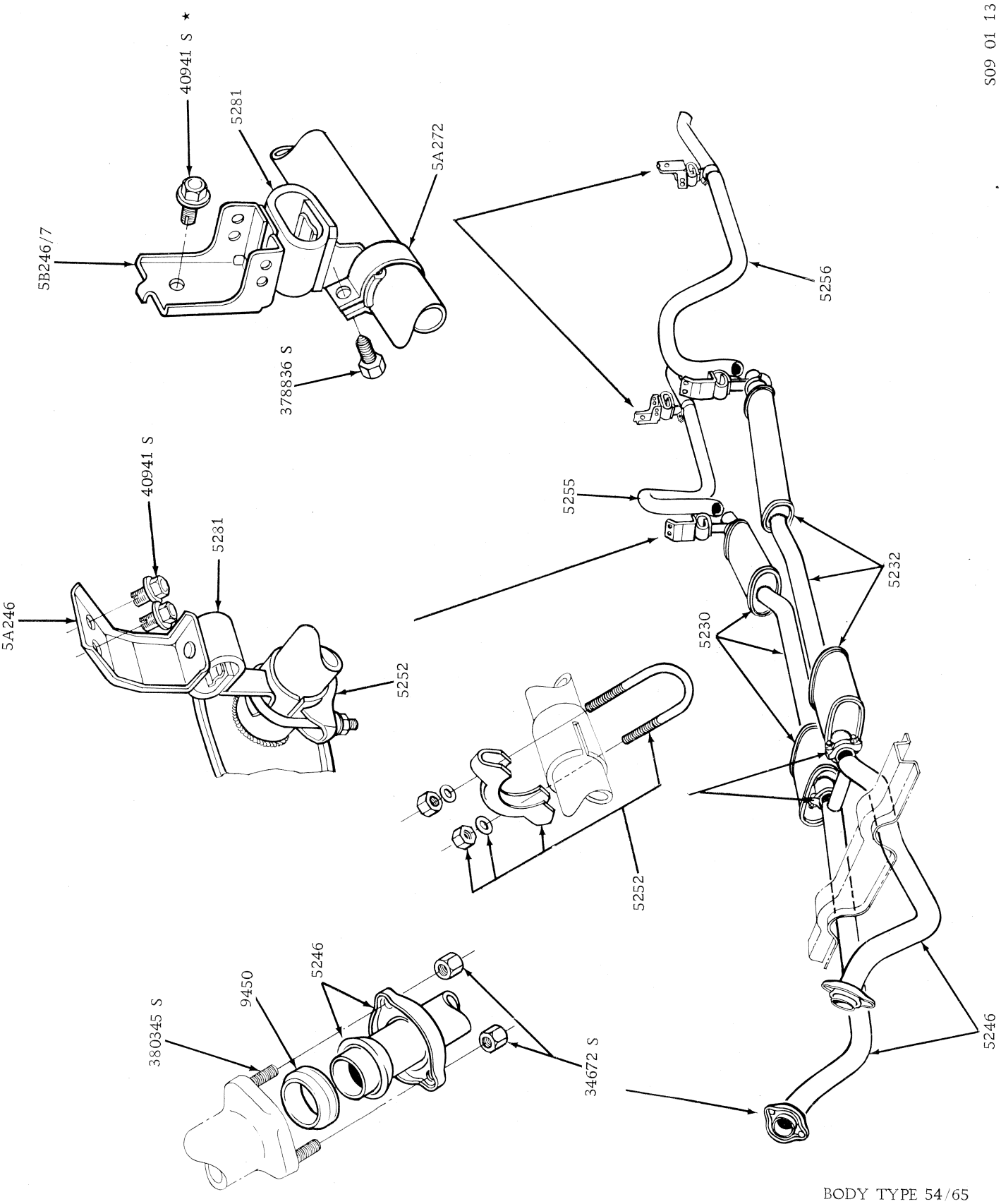

DUAL EXHAUST SYSTEM FALCON SEDAN 8 CYL 2V

S09 01 14

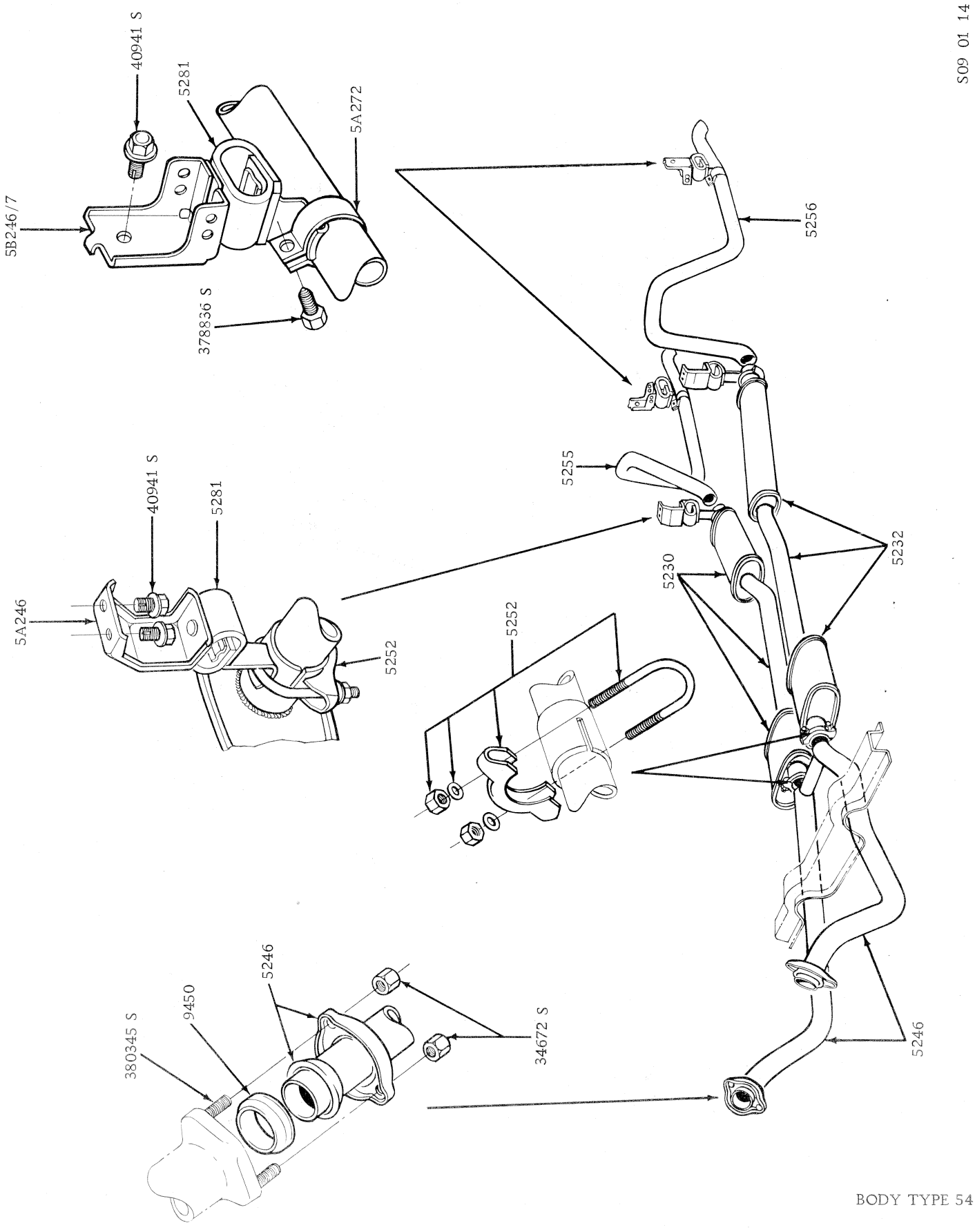

BODY TYPE 54

DUAL EXHAUST SYSTEM FAIRLANE 8 CYL 2V

MODEL	BODY TYPE	REMARKS	UNIT	PART NUMBER		
– – 5310 – – SPRING ASSY. – FRONT						
XA/B, ZF/G	54, 65	R.H. – 6 cyl. – without 'Hi Ride' – blue/white	1	XA	5310	BA
XA/B, ZF/G	54, 65	L.H. – 6 cyl. – without 'Hi Ride' – blue	1	XA	5310	AA
XA/B, ZF/G	54, 65	R.H. – 8 cyl. 2V – without 'Hi Ride' – yellow/white	1	XA	5310	DA
XA/B, ZF/G	54, 65	L.H. – 8 cyl. 2V – without 'Hi Ride' – yellow	1	XA	5310	CA
XA/B	66, 78	R.H. – 6 cyl. – without 'Hi Ride' – red/white	1	XA	5310	HA
XA/B, ZF/G	54	R.H. – 6 cyl. – with 'Hi Ride' – red/white	1	XA	5310	HA
XA/B	66, 78	L.H. – 6 cyl. – without 'Hi Ride' – red	1	XA	5310	GA
XA/B, ZF/G	54	L.H. – 6 cyl. – with 'Hi Ride' – red	1	XA	5310	GA
XA/B	66, 78	R.H. – 8 cyl. 2V – without 'Hi Ride' – green/white	1	XA	5310	LA
XA/B, ZF/G	54	R.H. – 8 cyl. 2V – with 'Hi Ride' – green/white	1	XA	5310	LA
XA/B	66, 78	L.H. – 8 cyl. 2V – without 'Hi Ride' – green	1	XA	5310	KA
XA/B, ZF/G	54	L.H. – 8 cyl. 2V – with 'Hi Ride' – green	1	XA	5310	KA
XA	71	R.H. – 6 cyl. – without 'Hi Ride' – blue/white – to 4/73	1	XA	5310	BA
XA	71	L.H. – 6 cyl. – without 'Hi Ride' – blue – to 4/73	1	XA	5310	AA
XA	71	R.H. – 8 cyl. 2V – without 'Hi Ride' – yellow/white – to 4/73	1	XA	5310	DA
XA	71	L.H. – 8 cyl. 2V – without 'Hi Ride' – yellow – to 4/73	1	XA	5310	CA
XA/B	71	R.H. – 6 cyl. – red/white – from 4/73	1	XA	5310	HA
XA/B	71	L.H. – 6 cyl. – red – from 4/73	1	XA	5310	GA
XA/B	71	R.H. – 8 cyl. 2V – green/white – from 4/73	1	XA	5310	LA
XA/B	71	L.H. – 8 cyl. 2V – green – from 4/73	1	XA	5310	KA
XA/B	54H, 65H	R.H. – tan/white	1	XA	5310	B
XA/B	54D, 65	R.H. – 8 cyl. – sports option – tan/white	1	XA	5310	B
XA	54B	R.H. – OSO-G-6001/2 – tan/white	1	XA	5310	B
XA/B	54H, 65H	L.H. – tan	1	XA	5310	A
XA/B	54, 65	L.H. – 8 cyl. – sports option – tan	1	XA	5310	A
XA	54B	L.H. – OSO-G-6001/2 – tan	1	XA	5310	A
XA/B	54H, 65H	R.H. – GT HO – pink/white	1	XA	5310	VA
XA	54H, 65H	R.H. – with A/C – pink/white	1	XA	5310	VA
XA/B	54H, 65H	L.H. – GT HO – pink	1	XA	5310	UA
XA	54H, 65H	L.H. – with A/C – pink	1	XA	5310	UA
– – 5355 – – SHIM – FRONT SPRING						
XA/B, ZF/G	All	With air cond.	2	C60Z	5355	A
– – 5415 – – INSULATOR – FRONT SPRING UPPER						
XA/B, ZF/G	All		2	C4DA	5415	A
– – 5482 – – BAR ASSY. – FRONT STABILIZER						
XA/B, ZF/G	54, 65, 71	6 cyl.	1	XA	5482	AA
XA/B, ZF/G	54, 65, 71	8 cyl.	1	XA	5482	BA
XA/B, ZF/G	66, 78	6 and 8 cyl.	1	XA	5482	BA
XA/B	54H, 65H		1	XA	5482	A
XA/B	54, 65	8 cyl. – sports option	1	XA	5482	A
XA	54B	OSO-G-6001/2	1	XA	5482	A
XA/B, ZF/G	All	Washer – cup – att. bar assy.	8	371216 S9		
– – 5A483 – – PLATE REINFORCEMENT – FRONT STABILIZER BAR MOUNTING BRACKET (REFER ALSO 5A492)						
XA/B, ZF/G	All	R.H.	1	XA	5A483	A
– – 5484 – – INSULATOR – STABILIZER BAR TO FRAME						
XA/B, ZF/G	54, 65, 71	6 cyl.	2	C60A	5484	B
XA/B, ZF/G	All	8 cyl. 2V	2	C60A	5484	D
XA/B	54H, 65H		2	XA	5484	A
XA/B	54, 65	8 cyl. – sports option	2	XA	5484	A
– – 5486 – – BRACKET – STABILIZER BAR MOUNTING						
XA/B, ZF/G	All exc. 54H, 65H		2	XT	5486	A
XA/B	54H, 65H	Also handling option	2	XA	5486	A
XA/B, ZF/G	All	Bolt – 3/8" – 16 x 1-1/8" – att. bracket to underbody	a/r	20408 S2		
XA/B, ZF/G	All	Nut – 3/8" – 16 lock – att. bracket to underbody	a/r	377706 S2		
– – 5A486 – – KIT – STABILIZER END REPAIR						
XA/B, ZF/G	All		1	C20Z	5A486	A
– – 5A486 – – PLATE – FRONT STABILIZER BAR INSULATOR RETAINING						
XA/B	All	Handling option	2	ARC6DA	5A486	A
– – 5490 – – SPACER – FRONT STABILIZER BAR						
XA/B, ZF/G	All		2	C20A	5490	A

MODEL	BODY TYPE	REMARKS	UNIT	PART NUMBER		
— — 55490 — — INSULATOR — STABILIZER BAR TO LOWER SUSPENSION ARM LINK BOLT						
XA/B, ZF/G	All		8	KC	55490	A
— — 5A492 — — PLATE REINFORCEMENT — FRONT STABILIZER BAR MOUNTING BRACKET (REFER ALSO 5A483)						
XA/B, ZF/G	All	L.H.	1	XA	5A492	A
— — 5493 — — INSULATOR — STABILIZER BAR						
XA/B	54H, 65H	GT HO	1	C70Z	5493	A
— — 5494 — — BAR — FRONT STABILIZER						
XA/B	54H, 65H	GT HO	1	XA	5494	CA
— — 5A494 — — INSULATOR — FRONT STABILIZER BAR						
XA/B	54H, 65H	GT HO	16	C70A	5A494	A
— — 5495 — — STUD — STABILIZER LINK						
XA/B, ZF/G	All		2	ARC6DA	5495	A
XA/B, ZF/G	All	Washer — cup type — attach 5482 to 3042	2	371216 S9		

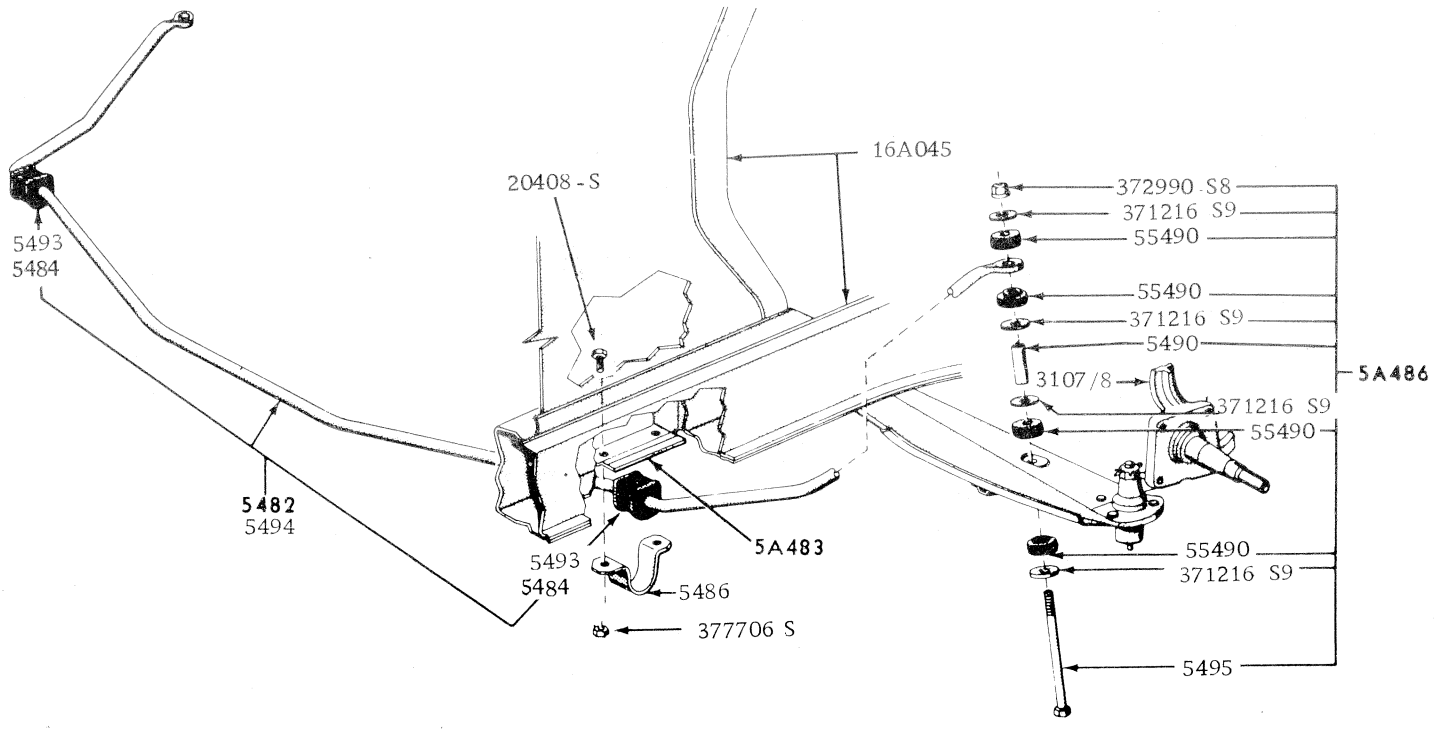

TYPICAL STABILIZER BAR FRONT

MODEL	BODY TYPE	REMARKS	UNIT	PART NUMBER		
– – 5560 – – SPRING ASSY. – REAR						
XA/B	54, 65	R.H. – blue & white	1	XA	5560	BA
XA/B	54, 65	L.H. – blue	1	XA	5560	AA
XA/B	54	R.H. – yellow & white – 'Hi Ride'	1	XA	5560	DA
XA/B	54	L.H. – yellow – 'Hi Ride'	1	XA	5560	CA
XA/B	54H, 65H	R.H. – silver & white – also sports option	1	XA	5560	NA
XA/B	54H, 65H	L.H. – silver – also sports option	1	XA	5560	MA
XA/B	54H, 65H	GT HO – orange & blue	2	XW	5560	A
XA	71	R.H. – red & white – to 4/73	1	XA	5560	HA
XA	71	L.H. – red – to 4/73	1	XA	5560	GA
XA/B	71	R.H. – yellow & white – from 4/73 – also 'Hi Ride' – to 4/73	1	XA	5560	TA
XA/B	71	L.H. – yellow – from 4/73 – also 'Hi Ride' – to 4/73	1	XA	5560	SA
XA/B	66, 78	10 cwt. – orange	2	XA	5560	LA
XA/B	66, 78	15 cwt. – green	2	XA	5560	KA
ZF/G	All	R.H. – blue & white	1	ZF	5560	BA
ZF/G	All	L.H. – grey	1	ZF	5560	AA
ZF/G	All	R.H. – white & 2 blue – 'Hi Ride'	1	ZF	5560	DA
ZF/G	All	L.H. – 2 blue – 'Hi Ride'	1	ZF	5560	CA
XA/B, ZF/G	All	Washer – .52" I.D. x 1.25" O.D. flat – att. spring assy. to underbody	4	351810 S8		
XA/B, ZF/G	All	Bolt – ½" – 13 x 6.50" – att. spring assy. to underbody	2	AR 380972 S36		
– – 5564 – – LEAF – REAR SPRING – NO. 1						
XA/B	54, 65	P/o XA-5560-AA/BA/CA/DA	2	XA	5564	AA
XA/B	54, 65	P/o XA-5560-MA/NA	2	XA	5564	E
XA/B	71	P/o XA-5560-EA/FA/GA/HA	2	XA	5564	BA
XA/B	66, 78	15 cwt. – P/o of XA-5560-KA	2	XA	5564	CA
XA/B	66, 78	10 cwt. – P/o of XA-5560-LA	2	XA	5564	DA
XA/B	54H, 65H	GT HO	2	XT	5564	A
ZF/G	All		2	ZF	5564	A
– – 5565 – – LEAF – REAR SPRING – NO. 2						
XA/B	54, 65	P/o XA-5560-AA/BA/CA/DA	2	XA	5565	AA
XA/B	54, 65	P/o XA-5560-MA/NA	2	XA	5565	E
XA/B	71	P/o XA-5560-EA/FA/GA/HA	2	XA	5565	BA
XA/B	66, 78	15 cwt. – P/o XA-5560-KA	2	XA	5565	CA
XA/B	66, 78	10 cwt. – P/o XA-5560-LA	2	XA	5565	DA
XA/B	54H, 65H	GT HO	2	XT	5565	A
ZF/G	All		2	ZF	5565	A
– – 5586 – – INSERT – REAR SPRING						
XA/B, ZF/G	All		6	C0AA	5586	B
– – 5630 – – KIT – REAR SPRING SHACKLE – FRONT						
XA/B, ZF/G	All		2	ARC6DZ	5630	A
– – 5631 – – KIT – REAR SPRING SHACKLE – REAR						
XA/B, ZF/G	All		1	ARC6DZ	5631	A
– – 5A638 – – BUSH ASSY. – REAR SUSPENSION RADIUS ARM						
XA/B	All	From 4/73	4	71BB	5A638	FA
– – 5K650/1 – – ARM & BUSH ASSY. – REAR SUSPENSION RADIUS						
XA	All	R.H. – to 4/73	1	XA	5K651	A
XA/B	All	R.H. – from 4/73	1	XA	5K651	B
XA	All	L.H. – to 4/73	1	XA	5K650	A
XA/B	All	L.H. – from 4/73	1	XA	5K650	B
– – 5A654/5 – – PLATE ASSY. – RADIUS ARM TO SIDEMEMBER						
XA/B	All	R.H.	1	PL	5A654	A
XA/B	All	L.H.	1	PL	5A655	A
– – 5A656/7 – – BRACKET ASSY. – REAR SUSPENSION RADIUS ARM TO AXLE						
XA	All	R.H. – exc. GT HO – to 4/73	1	XA	5A656	A
XA/B	All	R.H. – exc. GT HO – from 4/73	1	XA	5A656	B
XA/B	54H, 65H	R.H. – GT HO – O.N.R.	1	XA	5A656	BA
XA	All	L.H. – exc. GT HO – to 4/73	1	XA	5A657	A
XA/B	All	L.H. – exc. GT HO – from 4/73	1	XA	5A657	B
XA/B	54H, 65H	L.H. – GT HO – O.N.R.	1	XA	5A657	BA

MODEL	BODY TYPE	REMARKS	UNIT	PART NUMBER		
– – 5A666 – – BRACKET – REAR SUSPENSION RADIUS ARM TO SIDEMEMBER						
XA	All	To 4/73	2	XA	5A666	A
– – 5705 – – "U" BOLT – REAR SPRING						
XA/B, ZF/G	All exc. 54H, 65H	Exc. with sports handling suspension	4	XW	5705	A
XA/B	All	302 c.i.d. – with sports handling suspension	4	XW	5705	A
XA/B	54H, 65H	Also all 351 c.i.d. 2V – with sports handling suspension	4	XA	5705	A
XA/B	54H, 65H	GT HO	4	XA	5705	BA
– – 5732 – – INSULATOR – REAR SPRING CENTRE						
XA/B, ZF/G	All exc. 66, 78		4	C4GA	5732	A
– – 5736 – – RETAINER – REAR SPRING CENTRE INSULATOR						
XA/B, ZF/G	54, 65	200/250/302 c.i.d.	2	ARC70A	5736	A
XA, ZF	54, 65	351 c.i.d. – to 7/73	2	ARC70A	5736	A
XA/B	71	200/250/302 c.i.d.	2	XA	5736	A
XA	71	351 c.i.d. – to 7/73	2	XA	5736	A
XA/B, ZF/G	All	351 c.i.d. – from 7/73	2	XA	5736	B
XA/B	54H, 65H	GT HO	2	XA	5736	A
– – 5B736 – – SPACER – REAR SPRING CENTRE MOUNTING						
XA/B	54H, 65H	Also all with sports handling suspension	4	XW	5B736	A
– – 5737 – – BUSHING – REAR SPRING REAR SHACKLE (ALSO REFER 5781)						
XA/B, ZF/G	54, 65, 71		8	ARC6DZ	5737	A
– – 5770 – – BRACE – REAR SPRING FRONT HANGER						
XA/B, ZF/G	All	R.H.	1	XR	5775	D
XA/B, ZF/G	All	L.H.	1	XR	5775	E
– – 5775 – – HANGER – REAR SPRING						
XA/B, ZF/G	All	Front – R.H.	1	C60B	5770	A
XA/B, ZF/G	All	Front – L.H.	1	C60B	5775	A
XA/B	66, 71, 78	Shackle – rear	2	XA	5775	AA
XA/B	66, 71, 78	Bolt – 3/8" – 16 x 1.12" – hanger to underbody	4	AR 387266 S2		
– – 5776 – – SHACKLE ASSY. – REAR SPRING						
XA/B, ZF/G	All		4	XA	5776	A
XA/B, ZF/G	All	Nut – shackle retaining – 3/8" – 24	4	376918 S36		
– – 5781 – – BUSHING ASSY. – REAR SPRING (REFER ALSO 5737)						
XA/B, ZF/G	All	Also 54B – New Zealand	2	C4GA	5781	B
XA/B, ZF/G	66, 78	Front/rear – also OSO-G-5014	8	XT	5781	A
XA	66B	New Zealand only	2	C5ZZ	5781	A
– – 5A788 – – SPACER – BRAKE THREEWAY UNION TO AXLE HOUSING						
XA/B	54H, 65H	GT HO	1	XW	5A788	A
– – 5798/9 – – PLATE – REAR SPRING "U" BOLT						
XA/B	54A,B,C,D,H, 65	R.H. – h/duty dust pack	1	XT	5798	A
XA/B	54A,B,C,D,H, 65	L.H. – h/duty dust pack	1	XT	5799	A
XA/B, ZF/G	54E,G, 71	R.H.	1	XA	5798	B
XA/B, ZF/G	54E,G, 71	L.H.	1	XA	5799	B
XA/B	66, 78	R.H.	1	XA	5798	AA
XA/B	66, 78	L.H.	1	XA	5799	AA
– – 5A798 – – EXTENSION – PLATE REAR SPRING "U" BOLT						
XA/B, ZF/G	All	H/duty dust pack	2	XW	5A798	A

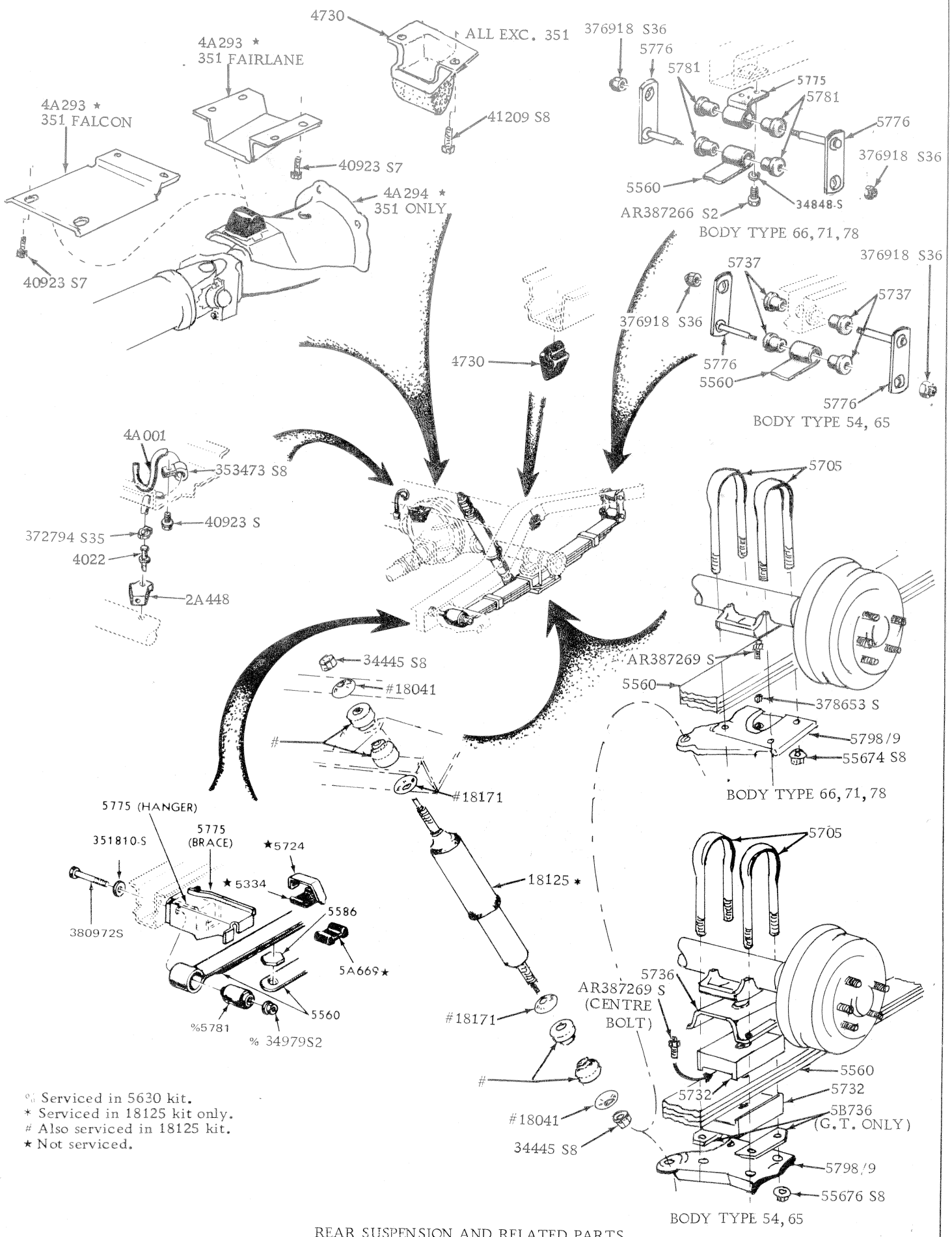

% Serviced in 5630 kit.
★ Serviced in 18125 kit only.
Also serviced in 18125 kit.
★ Not serviced.

REAR SUSPENSION AND RELATED PARTS

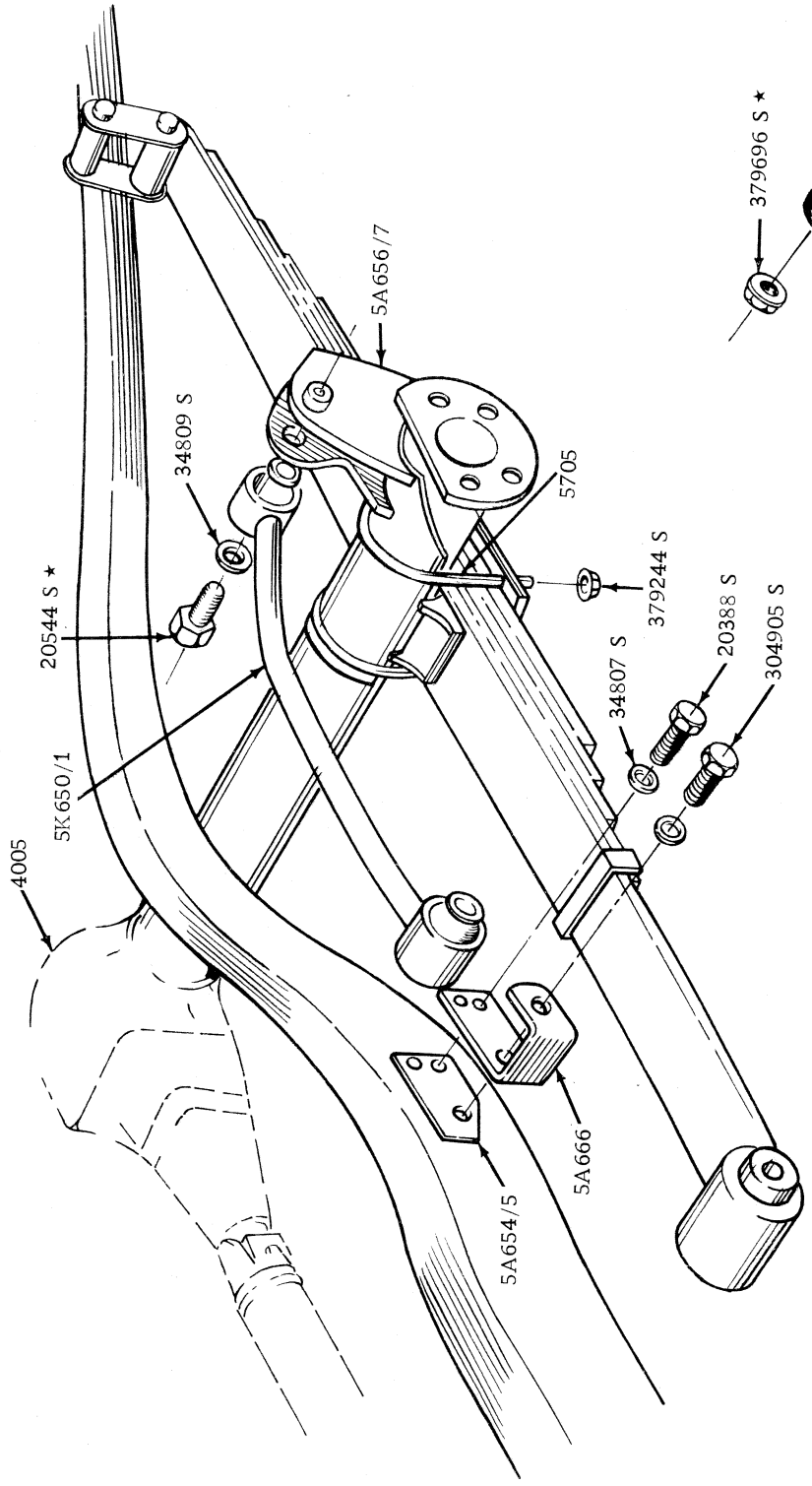

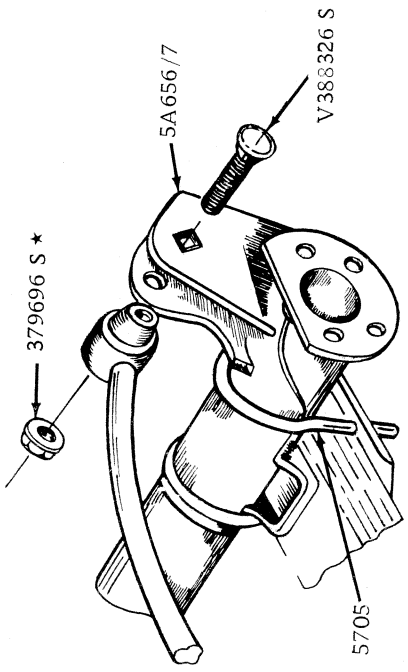

HANDLING OPTION

S04 02 4

REAR SUSPENSION RADIUS ROD

ENGINE IDENTIFICATION

To facilitate the identification of engines and related parts, always identify the vehicle to be serviced by obtaining the 'Model Code' and 'Engine Code' details stamped on the vehicle identification plate.

Example: Model Code "45373" = XB Falcon 500 Utility.
Engine Code "K" = 351 c.i.d. – 8 cyl. 2V.

Complete model identification plate details are listed in the 'General Information' section of this catalogue.

ENGINE IDENTIFICATION – U.S. 250 c.i.d. 1V

There are 3000 XA/ZF vehicles fitted with 250 c.i.d. 1V engines which contain unique imported parts. The engines containing these unique parts can be identified by the following means.

1. Each engine will be stamped "US 250" on the pad located on the side of the block, rearwards of the coil.
2. Each engine has a minilla tag stamped "US 250".
3. The rocker cover is "Brambles red with corio blue stripe 4" x 1½" on top rear end".

All parts unique to these engines will have the remark "US 250" in the remarks column.

ENGINE IDENTIFICATION – IMPORTED 351 c.i.d. 4V

The imported 351 c.i.d. 4V engine can be distinguished from the locally built 351 c.i.d. 4V engine by the following means.

1. The imported engine has an identification tag giving details of manufacture, whereas on the locally built engine, the identification number is stamped directly onto the block.
2. The distributor fitted to the imported engine is a Motorcraft design with a double vacuum advance diaphragm (and therefore two vacuum hoses) instead of the single vacuum advance Bosch type fitted to the locally built engine.
3. The thermostatic choke heat tube on the imported engine is connected into the inlet manifold whereas it runs through the righthand exhaust manifold on the locally built engine.

HOW TO FIND ENGINE PARTS

1. Determine the engine cubic inch displacement (C.I.D.) from the 'General Information' section of the catalogue.
2. Use the engine C.I.D. and engine parts list index (Section 60, Page 2) to find the engine parts list required.

   Example: A 1974 Falcon 500 Utility with 351 c.i.d. 2V engine as shown for engine code "K" in the 'General Information Section', the 'Engine Parts List Index' (Section 60, Page 2) shows that parts for this engine are listed in parts list "E".
3. Turn to the parts list and select the component part desired.

ENGINE PARTS LIST INDEX

CYL.	200 C.I.D. 1V	250 C.I.D. 1V	250 C.I.D. 2V	302 C.I.D. 2V	351 C.I.D. 2V	351 C.I.D. 4V	351 C.I.D. 4V H.O.
6	A						
6		B					
6			C				
8				D			
8					E		
8						F	
8							G

DESCRIPTION	PART NUMBER	ENGINE PARTS LIST "A TO L"											
		A	B	C	D	E	F	G	H	I	J	K	L
KIT – ENGINE GASKET	6008												
Complete	XY 6008 A	A	B	C									
Complete – Aust. build	D00Z 6008 A				D	E	F						
Complete – U.S. build	D00Z 6008 B						F	G					
Upper	XW 6014 A	A	B	C									
Upper – Aust. build	D00Z 6079 A				D	E	F						
Upper – U.S. build	D00Z 6079 B						F	G					
DOWEL – CYLINDER HEAD TO BLOCK	6A008												
	C20Z 6A008 A				4	4	4	4					
CYLINDER ASSY. (INCLUDES ALL INTERNAL PARTS)	6009												
H/C	XA 6009 E	A											
M/C	XA 6009 F	A											
80 Octane	XA 6009 G	A											
H/C	XA 6009 H		B										
M/C	XA 6009 J		B										
	XA 6009 K			C									
	XA 6009 A				D								
	XA 6009 B					E							
Aust. build	XA 6009 LA						F						
U.S. build	D0AZ 6009 C						F	G					
BLOCK – CYLINDER	6010												
To 6/72	XY 6010 A	A	B	C									
From 6/72 to 1/74	XA 6010 C	A	B	C									
From 1/74	CJ 6010 AA	A	B	C									
'U.S. 250'	XY 6010 AA		B										
	XA 6010 A				D	E	F	G					
Used 250 units – with 4 bolt main bearing caps													
	D1ZZ 6010 A							G					
Plug – core hole inside cyl. block	354942 S36	A	B	C									
Plug – cyl. block drain	374259 S8	A	B	C									
Plug – main oil gallery rear blanking	V 388360 S	A	B	C									
Plug – main oil gallery front blanking	359899 S	A	B	C									
Plug – mfg. hole inside cyl. block	378336 S				D	E	F	G					
KIT – ENGINE GASKET – UPPER – (REFER 6008)	6014												

DESCRIPTION	PART NUMBER	ENGINE PARTS LIST "A TO L"											
		A	B	C	D	E	F	G	H	I	J	K	L
COVER ASSY. – CYLINDER FRONT	6019												
	XY 6019 A	A	B	C									
	D0AZ 6B070 A				D	E	F	G					
Bolt – ¼" – 20 x 1.82" – att. cover to block	377387 S8	4	4	4									
Bolt – ¼" – 20 x 1.3/8" – att. cover to block	55247 S	3	3	3									
Bolt – 3/8" – 16 x 2.00" – att. cover to block	43006 S				2	2	2	2					
Bolt – 5/16" – 18 x 0.75" – att. cover to block	56120 S				3	3	3	3					
GASKET – CYLINDER FRONT COVER	6020												
	XY 6020 A	A	B	C									
	D0AZ 6020 A				D	E	F	G					
POINTER – TIMING	6023												
	D0AZ 6023 A				D	E	F	G					
PLUG – WELSH – CYLINDER BLOCK	6026												
Std. – 1.50" O.D. – core holes in cyl. head & block	C8AZ 6026 C	6	6	6	6	6	6	6					
O/s – 1.56" O.D. – core holes in cyl. head & block	C8AZ 6026 D	6	6	6	6	6	6	6					
Std. – 2.07" O.D. – core holes in cyl. head & block – also camshaft rear bearing hole	C5AZ 6026 G	a/r	a/r	a/r									
O/s – 2.12" O.D. – core holes in cyl. head & block – also camshaft rear bearing hole	C5AZ 6026 H	a/r	a/r	a/r									
1.016" O.D. – core holes in cyl. head & intake manifold	C8DZ 6026 A	6	6	6									
HEAD ASSY. – CYLINDER	6049												
Rebuilt	XW 6049 B	A	B										
Rebuilt	XY 6049 ARB	A	B										
	XY 6049 BRB			C									
Aust. build	XA 6049 AB				2								
U.S. build	XA 6049 A					2	2						
	D1AZ 6049 B						2						
	XAG 6049 A							2					
Plug – core hole inside cyl. head & end of inlet manifold	359285 S	2	2	2									
Plug – ¼" – 18 – cyl. head drain hole	374259 S8	a/r	a/r	a/r									
Plug – heater outlet hole in cyl. head	87710 S	A	B	C									
Plug – cup type – core hole in end of cyl. head – to 12/73	354942 S36	A	B	C									
Plug – cup type – core hole in end of cyl. head – from 1/74	376043 S36	A	B	C									
Plug – ¾" – 14 – core holes in cyl. block	371485 S				6	6	6	6					
Adaptor – vacuum pipe to cyl. head	AR 387222 S	A											
GASKET – CYLINDER HEAD	6051												
	XT 6051 A	A	B	C									
	D0AZ 6051 C				2	2							
	D3ZZ 6051 A						2	2					
BOLT – CYLINDER HEAD	6065												
R.H. front	XY 6065 A	A	B	C									
Exc. R.H. front	ARC5DE 6065 B	13	13	13									
½" – 13 x 4.33"	D0AZ 6065 A				20	20	20	20					
PLATE ASSY. – CYLINDER FRONT (REFER 6019)	6B070												

DESCRIPTION	PART NUMBER	ENGINE PARTS LIST "A TO L"											
		A	B	C	D	E	F	G	H	I	J	K	L
KIT – ENGINE GASKET – UPPER – (REFER 6008)	6079												
PISTON & PIN ASSY.	6108												
80 Octane – std. – red	ZB 6108 K	6											
80 Octane – std. – blue	ZB 6108 L	6											
80 Octane – 0.003" o/s	ZB 6108 M	6											
80 Octane – 0.020" o/s	ZB 6108 N	6											
80 Octane – 0.030" o/s	ZB 6108 P	6											
80 Octane – 0.040" o/s	ZB 6108 R	6											
L/C – std. – red	XW 6108 A	6											
L/C – std. – blue	XW 6108 B	6											
L/C – 0.003" o/s	XW 6108 C	6											
L/C – 0.020" o/s	XW 6108 D	6											
L/C – 0.030" o/s	XW 6108 E	6											
L/C – 0.040" o/s	XW 6108 F	6											
H/C – std. – red	XY 6108 A	6											
H/C – std. – blue	XY 6108 B	6											
H/C – 0.003" o/s	XY 6108 C	6											
H/C – 0.020" o/s	XY 6108 D	6											
H/C – 0.030" o/s	XY 6108 E	6											
H/C – 0.040" o/s	XY 6108 F	6											
L/C – std. – red	ZD 6108 G		6										
L/C – std. – blue	ZD 6108 H		6										
L/C – 0.003" o/s	ZD 6108 J		6										
L/C – 0.020" o/s	ZD 6108 K		6										
L/C – 0.030" o/s	ZD 6108 L		6										
L/C – 0.040" o/s	ZD 6108 M		6										
H/C – std. – red	ZD 6108 A		6	6									
H/C – std. – blue	ZD 6108 B		6	6									
H/C – 0.003" o/s	ZD 6108 C		6	6									
H/C – 0.020" o/s	ZD 6108 D		6	6									
H/C – 0.030" o/s	ZD 6108 E		6	6									
H/C – 0.040" o/s	ZD 6108 F		6	6									
Std. – red	XA 6108 A				8	8	8	8					
Std – blue – Aust. build	XA 6108 B				8	8	8						
0.003" o/s – Aust. build	XA 6108 C				8	8	8						
0.020" o/s	D0AZ 6108 D				8	8	8	8					
0.030" o/s	D0AZ 6108 E				8	8	8	8					
0.040" o/s	D0AZ 6108 F				8	8	8	8					
Std. – blue – U.S. build	D0AZ 6108 B						8	8					
0.003" o/s – U.S. build	D0AZ 6108 C						8	8					
Std – used on 250 units with 4 bolt main bearings	D1ZZ 6108 A							8					
0.003" o/s – used on 250 units with 4 bolt main bearings	D1ZZ 6108 C							8					
PIN – PISTON	6135												
	ARC3DE 6135 A	6	6	6									
Std.	B2AZ 6135 A				8	8	8	8					
0.001" o/s	EAA 6135 C				8	8	8	8					
0.002" o/s	EAA 6135 D				8	8	8	8					
Used on 250 units with 4 bolt main bearings	C9ZZ 6135 E							8					
RING SET – PISTON	6148												
Std.	MF 1166 STD	A	B	C									
0.020" o/s	MF 1166 020	A	B	C									
0.030" o/s	MF 1166 030	A	B	C									
0.040" o/s	MF 1166 040	A	B	C									
Std.	MF 1360 STD				D	E	F	G					
0.020" o/s	MF 1360 020				D	E	F	G					
0.030" o/s	MF 1360 030				D	E	F	G					
0.040" o/s	MF 1360 040				D	E	F	G					

DESCRIPTION	PART NUMBER	ENGINE PARTS LIST "A TO L"											
		A	B	C	D	E	F	G	H	I	J	K	L
ROD ASSY. – CONNECTOR	**6200**												
	XY 6200 B	6											
	XY 6200 A		6	6									
'U.S. 250'	XY 6200 AA		6										
	XA 6200 A				8								
	XA 6200 B					8	8						
	XA 6200 DA							8					
BEARING – CON ROD (ALSO REFER 18330)													
	6211												
Std.	XW 6211 C	12	12	12									
0.002" u/s	XW 6211 D	12	12	12									
0.010" u/s	XW 6211 E	12	12	12									
0.020" u/s	XW 6211 F	12	12	12									
0.030" u/s	XW 6211 G	12	12	12									
0.040" u/s	XW 6211 H	12	12	12									
Std.	D0AZ 6211 A				16	16	16						
0.001" u/s	D0AZ 6211 B				16	16	16						
0.002" u/s	D0AZ 6211 C				16	16	16						
0.010" u/s	D0AZ 6211 D				16	16	16						
0.020" u/s	D0AZ 6211 E				16	16	16						
0.030"u/s	D0AZ 6211 F				16	16	16						
Std.	D1ZZ 6211 A							16					
0.001" u/s	D1ZZ 6211 B							16					
0.002" u/s	D1ZZ 6211 C							16					
0.010" u/s	D1ZZ 6211 D							16					
0.020" u/s	D1ZZ 6211 E							16					
0.030" u/s	D1ZZ 6211 F							16					
Kit – std.	XW 18330 C	A	B	C									
Kit – 0.002" u/s	XW 18330 D	A	B	C									
Kit – 0.010" u/s	XW 18330 E	A	B	C									
Kit – 0.020" u/s	XW 18330 F	A	B	C									
Kit – 0.030" u/s	XW 18330 G	A	B	C									
Kit – 0.040" u/s	XW 18330 H	A	B	C									
NUT – CONNECTOR ROD	**6212**												
5/16" – 24	C3DZ 6212 A	12	12	12									
Aust. build	XA 6212 A				16	16	16						
U.S. build	C9AZ 6212 B						16						
	D1ZZ 6212 A							16					
BOLT – CONNECTING ROD	**6214**												
	XW 6214 B	12	12	12									
	XA 6214 AA				16	16	16						
	D1ZZ 6214 A							16					
CAMSHAFT ASSY.	**6250**												
	XY 6250 A	A	B	C									
Aust. build	XA 6250 AA				D	E	F						
U.S. build	D0AZ 6250 C						F						
	D1ZZ 6250 B							G					
SPROCKET – CAMSHAFT	**6256**												
	XY 6256 A	A	B	C									
	D0AZ 6256 A				D	E	F	G					
Bolt – 7/16" – 14 x 1.12" – sprocket to camshaft – to 12/73	43044 S36	A	B	C									
Bolt – sprocket to camshaft – from 1/74	371643 S2	A	B	C									
Pin – ¼" – 5/16" – sprocket to camshaft	373118 S	A	B	C									
Bolt – sprocket to camshaft – O.N.R.	376058 S				D	E	F	G					

DESCRIPTION	PART NUMBER	ENGINE PARTS LIST "A TO L"											
		A	B	C	D	E	F	G	H	I	J	K	L
BEARING – CAMSHAFT	**6261/3, 6267,**												
	6270												
Inner	ARC6DE 6263 B	2	2	2									
Outer	ARC8DE 6270 B	2	2	2									
Front – std.	D0AZ 6261 E				D	E	F	G					
Front – 0.015" u/s I.D.	D0AZ 6261 C				D	E	F	G					
Front intermediate – std.	C20Z 6267 A				D	E	F	G					
Front intermediate – 0.015" u/s I.D.	C20Z 6267 B				D	E	F	G					
Centre – std.	C20Z 6262 A				D	E	F	G					
Centre – 0.015" u/s I.D.	C20Z 6262 B				D	E	F	G					
Rear intermediate – std.	C20Z 6270 A				D	E	F	G					
Rear intermediate – 0.015" u/s I.D.	C20Z 6270 B				D	E	F	G					
Rear – std.	C20Z 6263 A				D	E	F	G					
Rear – 0.015" u/s I.D.	C20Z 6263 B				D	E	F	G					
SPACER – CAMSHAFT SPROCKET	**6265**												
	C0DE 6265 A	A	B	C									
PLUG – CAMSHAFT REAR BEARING	**6266**												
	C5AZ 6266 B				D	E	F	G					
CHAIN – TIMING	**6268**												
	ARD1DE 6268 A	A	B	C									
	D0AZ 6268 A				D	E	F	G					
PLATE – CAMSHAFT THRUST	**6269**												
	XY 6269 A	A	B	C									
To 10/73	C8SZ 6269 A				D	E	F	G					
From 10/73	XA 6269 A				D	E	F	G					
Screw & washer – 5/16" – 18 – plate to block	42719 S	2	2	2									
Bolt – ¼" – 20 x ½" – plate to block	42910 S				2	2	2	2					
BEARING – CAMSHAFT (REFER 6261-3)	**6270**												
WASHER – CAMSHAFT SPROCKET	**6278**												
	EAA 6278 B	A	B	C									
	XA 6278 A				D	E	F	G					
Bolt – 3/8" – 16 x 2.00" – eccentric to camshaft	43006 S				2	2	2	2					
ECCENTRIC – CAMSHAFT FUEL PUMP DRIVE	**6287**												
Outer	D0AZ 6287 A				D	E	F	G					
Inner	D0AZ 6287 B				D	E	F	G					
PIN – CRANKSHAFT REAR OIL SEAL	**6A302**												
From 1/74	C0DZ 6A302 A	A	B	C	D	E	F	G					
CRANKSHAFT	**6303**												
	XY 6303 A	A											
	XY 6303 B		B	C									
'U.S. 250'	71DA 6303 AA		B										
	XA 6303 A				D								
	XA 6303 B					E	F	G					
SPROCKET – CRANKSHAFT	**6306**												
	XY 6306 A	A	B	C									
	C8SZ 6306 A				D	E	F	G					
Key – 3/16" – 1.75" – att. sprocket to crankshaft	372854 S	A	B	C	D	E	F	G					
SLINGER – CRANKSHAFT OIL	**6310**												
	XY 6310 A	A	B	C									
	D0AZ 6310 A				D	E	F	G					

DESCRIPTION	PART NUMBER	ENGINE PARTS LIST "A TO L"											
		A	B	C	D	E	F	G	H	I	J	K	L
PULLEY ASSY. – CRANKSHAFT – OUTER													
With P/S	**6A312**												
Without P/S – without A/C – 3 sheave – services single sheave type – to 1/75	XY 6A312 A	A	B	C									
Without P/S – without A/C – 3 sheave – services single sheave type – from 1/75	D0ZZ 6A312 A				D	E	F	G					
With P/S – with A/C	D3AZ 6A312 A*				D	E	F	G					
Bolt – 3/8" – 16 x 1.00" – pulley to damper	D00Z 6A312 B				D	E	F	G					
	42998 S2				4	4	4	4					
DAMPER ASSY. – CRANKSHAFT	**6316**												
To 3/74	ARD1DE 6316 A	A											
From 3/74	XB 6316 A	A											
To 3/74	ARD10E 6316 A		B	C									
From 3/74	XB 6316 B		B										
To 3/74	D2AZ 6316 B				D	E	F						
From 3/74	XB 6316 C				D	E	F						
	D2ZZ 6316 A							G					
Key – 3/16" x 1.75" – damper to crankshaft – O.N.R.	384230 S				D	E	F	G					
Bolt – damper to crankshaft	377850 S				D	E	F	G					
KIT – CRANKSHAFT BEARING	**18347**												
Std.	ZD 18347 A	A	B	C									
0.002" u/s	ZD 18347 C	A	B	C									
0.010" u/s	ZD 18347 D	A	B	C									
0.020" u/s	ZD 18347 E	A	B	C									
0.030" u/s	ZD 18347 F	A	B	C									
0.040" u/s	ZD 18347 G	A	B	C									
BEARING – CRANKSHAFT MAIN	**6333**												
Upper – std.	ZD 6333 A	6	6	6									
Upper – 0.002" u/s	ZD 6333 C	6	6	6									
Upper – 0.010" u/s	ZD 6333 D	6	6	6									
Upper – 0.020" u/s	ZD 6333 E	6	6	6									
Upper – 0.030" u/s	ZD 6333 F	6	6	6									
Upper – 0.040" u/s	ZD 6333 G	6	6	6									
Lower – std.	ZD 6333 H	6	6	6									
Lower – 0.002" u/s	ZD 6333 K	6	6	6									
Lower – 0.010" u/s	ZD 6333 L	6	6	6									
Lower – 0.020" u/s	ZD 6333 M	6	6	6									
Lower – 0.030" u/s	ZD 6333 N	6	6	6									
Lower– 0.040" u/s	ZD 6333 P	6	6	6									
Upper – std. – 'U.S. 250'	XY 6333 AA		6										
Upper – 0.002" u/s – 'U.S. 250'	XY 6333 DA		6										
Upper – 0.010" u/s – 'U.S. 250'	XY 6333 EA		6										
Upper – 0.020" u/s – 'U.S. 250'	XY 6333 FA		6										
Upper – 0.030" u/s – 'U.S. 250'	XY 6333 GA		6										
Lower – std. – 'U.S. 250'	XY 6333 JA		6										
Lower – 0.002" u/s – 'U.S. 250'	XY 6333 LA		6										
Lower – 0.010" u/s – 'U.S. 250'	XY 6333 MA		6										
Lower – 0.020" u/s – 'U.S. 250'	XY 6333 NA		6										
Lower – 0.030" u/s – 'U.S. 250'	XY 6333 PA		6										
Upper & lower – std.	D1ZZ 6333 A				8	8	8	8					
Upper & lower – 0.001" u/s	D1ZZ 6333 B				8	8	8	8					
Upper & lower – 0.002" u/s	D1ZZ 6333 C				8	8	8	8					
Upper & lower – 0.010" u/s	D1ZZ 6333 D				8	8	8	8					
Upper & lower – 0.020" u/s	D1ZZ 6333 E				8	8	8	8					
Upper & lower – 0.030" u/s	D1ZZ 6333 F				8	8	8	8					

DESCRIPTION	PART NUMBER	ENGINE PARTS LIST "A TO L"											
		A	B	C	D	E	F	G	H	I	J	K	L
BEARING – CRANKSHAFT MAIN THRUST	6337												
Upper – std.	ZD 6337 A	A	B	C									
Upper – 0.002" u/s	ZD 6337 C	A	B	C									
Upper – 0.010" u/s	ZD 6337 D	A	B	C									
Upper – 0.020" u/s	ZD 6337 E	A	B	C									
Upper – 0.030" u/s	ZD 6337 F	A	B	C									
Upper – 0.040" u/s	ZD 6337 G	A	B	C									
Lower – std.	ZD 6337 H	A	B	C									
Lower – 0.002" u/s	ZD 6337 K	A	B	C									
Lower– 0.010" u/s	ZD 6337 L	A	B	C									
Lower – 0.020" u/s	ZD 6337 M	A	B	C									
Lower – 0.030" u/s	ZD 6337 N	A	B	C									
Lower – 0.040" u/s	ZD 6337 P	A	B	C									
Upper – std. – 'U.S. 250'	D0TZ 6337 C		B										
Upper – 0.002" u/s – 'U.S. 250'	D0TZ 6337 E		B										
Upper – 0.010" u/s – 'U.S. 250'	D0TZ 6337 F		B										
Upper – 0.020" u/s – 'U.S. 250'	D0TZ 6337 G		B										
Upper – 0.030" u/s – 'U.S. 250'	D0TZ 6337 H		B										
Lower – std. – 'U.S. 250'	C6AZ 6337 G		B										
Lower – 0.002" u/s – 'U.S. 250'	C6AZ 6337 H		B										
Lower – 0.010" u/s – 'U.S. 250'	C6AZ 6337 J		B										
Lower – 0.020" u/s – 'U.S. 250'	C6AZ 6337 K		B										
Lower – 0.030" u/s – 'U.S. 250'	C6AZ 6337 L		B										
Upper & lower – std.	D1ZZ 6337 A				2	2	2	2					
Upper & lower – 0.001" u/s	D1ZZ 6337 B				2	2	2	2					
Upper & lower – 0.002" u/s	D1ZZ 6337 C				2	2	2	2					
Upper & lower – 0.010" u/s	D1ZZ 6337 D				2	2	2	2					
Upper & lower – 0.020" u/s	D1ZZ 6337 E				2	2	2	2					
Upper & lower – 0.030" u/s	D1ZZ 6337 F				2	2	2	2					
BOLT – CRANKSHAFT MAIN BEARING CAP	6345												
To 6/72	C2DZ 6065 A	14	14	14									
Exc. drilled & threaded head – from 6/72 to 1/74	C2DZ 6065 A	12	12	12									
Drilled & threaded head – from 6/72 to 1/74	CJ 6345 AA	2	2	2									
From 1/74	C2DZ 6065 A	14	14										
	D0AZ 6345 B				10	10	10	10					
Used on 250 units with 4 bolt main bearings	C9AZ 6345 A							10					
PLATE – FLYWHEEL REINFORCEMENT	6A366												
Auto. trans.	XY 6A366 A	A	B	C	D	E							
Auto. trans.	C20Z 6A366 A						F						
FLYWHEEL ASSY.	6375												
Man. trans.	XY 6375 C	A	B	C									
Auto. trans. – B/W	XY 6375 B	A	B	C									
Auto. trans. – C4	C9OZ 6375 A	A	B	C									
Man. trans.	C5AZ 6375 S				D								
Man. trans.	XW 6375 B					E	F	G					
Auto. trans.	C5AZ 6375 T				D	E	F						
WASHER – CRANKSHAFT PULLEY OR DAMPER RETAINING	6378												
1.76" O.D. – 0.66" I.D. – 0.212" thick	B8A 6378 A				D	E	F	G					
BOLT – FLYWHEEL TO CRANKSHAFT	6379												
Man. trans.	378769 S100	6	6	6									
Auto. trans.	378171 S100	6	6	6									
Man. trans. – to 10/73	378769 S100				6								
Man. trans. – to 10/73	B8AZ 6379 A					6	6	6					
Man. trans. – from 10/73	378769 S100				6	6	6	6					
Auto. trans. – to 10/73	378171 S100				6								
Auto. trans. – to 10/73	C3AZ 6379 A					6	6						
Auto. trans. – from 10/73	384918 S				6	6	6						

DESCRIPTION	PART NUMBER	ENGINE PARTS LIST "A TO L"											
		A	B	C	D	E	F	G	H	I	J	K	L
GEAR – FLYWHEEL STARTING RING	**6384**												
Man. trans.	ARC5DE 6384 A	A	B	C									
Man. trans. – 164 teeth	C5AZ 6384 D				D	E	F	G					
Auto. trans. – not serviced – part of 6375 assy.													
Rivet – gear to flywheel	6384	A	B	C	D	E	F						
	62305 S	2	2	2									
DOWEL – CYL. BLOCK TO FLYWHEEL HOUSING ½" x 1.00"	**6397**												
	EAD 6297 A				2	2	2	2					
SEAL – ENGINE REAR COVER PLATE Man. trans.	**6424**												
	C40Z 6424 A				D	E	F	G					
TAPPET ASSY. – VALVE 1.83" o/a length	**6500**												
	C8AZ 6500 A	12	12	12									
	D1AZ 6500 A				16	16	16						
	D1ZZ 6500 B							16					
VALVE – EXHAUST	**6505**												
Std.	XW 6505 A	6	6	6									
0.003" o/s	XW 6505 B	6	6	6									
0.015" o/s	XW 6505 C	6	6	6									
Std. – Aust. build – to 2/75	D1AZ 6505 A				8	8	8						
Std. – Aust. build – from 2/75	D5AZ 6505 A*				8	8	8						
0.003" o/s – Aust. build – to 2/75	D1AZ 6505 B				8	8	8						
0.003" o/s – Aust. build – from 2/75	D5AZ 6505 B*				8	8	8						
0.015" o/s – Aust. build – to 2/75	D1AZ 6505 C				8	8	8						
0.015" o/s – Aust. build – from 2/75	D5AZ 6505 C*				8	8	8						
0.030" o/s – Aust. build – to 10/73	D0AZ 6505 D				8	8	8						
0.030" o/s – Aust. build – from 2/75	D5AZ 6505 D*				8	8	8						
Std. – U.S. build	D0AZ 6505 E						8						
0.003" o/s – U.S. build	D0AZ 6505 F						8						
0.015" o/s – U.S. build	D0AZ 6505 G						8						
0.030" o/s – U.S. build	D0AZ 6505 H						8						
Std.	D0ZZ 6505 A							8					
0.003" o/s	D0ZZ 6505 B							8					
0.015" o/s	D0ZZ 6505 C							8					
0.030" o/s	D0ZZ 6505 D							8					
VALVE – INTAKE	**6507**												
Std.	XT 6507 E	6	6	6									
0.003" o/s	XT 6507 F	6	6	6									
0.015" o/s	XT 6507 G	6	6	6									
Std. – Aust. build	D0AZ 6507 E				8	8	8						
0.003" o/s – Aust. build	D0AZ 6507 F				8	8	8						
0.015" o/s – Aust. build	D0AZ 6507 G				8	8	8						
0.030" o/s – Aust. build	D0AZ 6507 H				8	8	8						
Std. – U.S. build	D0AZ 6507 A						8						
0.003" o/s – U.S. build	D0AZ 6507 B						8						
0.015" o/s – U.S. build	D0AZ 6507 C						8						
0.030" o/s – U.S. build	D0AZ 6507 D						8						
Std.	XA 6507 AA							8					
0.003" o/s	D0ZZ 6507 B							8					
0.015" o/s	D0ZZ 6507 C							8					
0.030" o/s	D0ZZ 6507 D							8					
SPRING – VALVE	**6513**												
	XY 6513 B	12	12	12									
Aust. Build	D0AZ 6513 A				16	16	16						
U.S. build	D0ZZ 6513 A						16	16					
RETAINER – VALVE SPRING	**6514**												
	XT 6514 A	12	12	12									
	D0AZ 6514 A				16	16	16						
	D00Z 6514 A							16					

DESCRIPTION	PART NUMBER	ENGINE PARTS LIST "A TO L"											
		A	B	C	D	E	F	G	H	I	J	K	L
SLEEVE – VALVE SPRING RETAINER	6517												
	C0DE 6517 A	12	12	12	16	16	16	16					
KEY – VALVE SPRING RETAINER	6518												
	7HA 6518 A	24	24	24									
	D0AZ 6518 A				32	32	32						
	C9ZZ 6518 A							32					
BAFFLE – VALVE PUSH ROD VALLEY	6524												
	D1AZ 6524 A				16	16	16	16					
STUD – VALVE ROCKER ARM SUPPORT	6A527												
	372499 S	6	6	6									
Bolt	D00Z 6A527 A				16	16	16						
Stud	C9ZZ 6A527 A							16					
SEAT – VALVE ROCKER ARM FULCRUM	6A528												
	D10Z 6A528 A				16	16	16						
	D00Z 6A528 B							16					
NUT – VALVE ROCKER ARM STUD	6A529												
Adjusting	C8SZ 6A529 A							16					
Locking	C9ZZ 6A529 B							16					
SUPPORT – VALVE ROCKER ARM	6531												
	C1DE 6531 A	6	6	6									
SCREW – VALVE ROCKER ARM ADJUSTING	6549												
	C2DE 6549 A	12	12	12									
SHAFT – VALVE ROCKER ARM	6563												
	C3DZ 6563 A	A	B	C									
ARM ASSY. – VALVE ROCKER	6564												
	XY 6564 AA	12	12	12									
	C9ZZ 6564 A				16	16	16	16					
Bolt – 5/16" – 18 x 1.38" – rocker arm & fulcrum to head	383662 S2				16	16	16	16					
PLATE – GUIDE VALVE ROCKER ARM	6A564												
	C9ZZ 6A564 A							8					
ROD ASSY. – VALVE PUSH	6565												
	XY 6565 B	12	12	12									
Std. – 8.438" long	XA 6565 A				16	16	16						
0.062" u/s – 8.374" long – when adjustment reqd.	D0AZ 6565 B				16	16	16						
0.062" o/s – 8.498" long – when adjustment req'd.	D0AZ 6565 C				16	16	16						
	D00Z 6565 F							16					
SEAL – VALVE STEM	6571												
	XT 6571 C	12	12	12									
	D0AZ 6571 A				16	16	16	16					
PLUG – VALVE ROCKER ARM SHAFT	6572												
	EAA 6572 A	2	2	2									

DESCRIPTION	PART NUMBER	ENGINE PARTS LIST "A TO L"											
		A	B	C	D	E	F	G	H	I	J	K	L
COVER ASSY. – VALVE ROCKER ARM	6582												
Blue – to 12/74	XA 6582 G	A											
Blue – from 12/74	XB 6582 B*	A											
Red – to 12/74	XA 6582 E		B										
Red – from 12/74	XB 6582 C*		B										
Orange	XA 6582 F			C									
R.H. – red – to 1/74	XA 6582 D				D								
R.H. – red – from 1/74 to 12/74	XB 6C582 BB				D								
R.H.– red – from 12/74	XB 6582 D*				D								
L.H. – red	XA 6582 H				D								
R.H. – orange – to 12/74	XA 6582 C					E							
R.H. – orange – from 12/74	XB 6582 E*					E							
L.H. – orange	XA 6582 B					E							
R.H. – orange – to 8/72	D2SZ 6582 A						F	G					
R.H. – blue – from 8/72	XA 6582 BB						F	G					
L.H. – orange – to 8/72	D1AZ 6582 A						F	G					
L.H. – blue – from 8/72	XA 6582 AB						F	G					
Screw & washer assy. – ¼" – 20 x 0.62" – cover retaining	373071 S	a/r	a/r	a/r	a/r	a/r	a/r	a/r					
COVER & BRACKET ASSY. – VALVE (REFER 6582)	6C582												
GASKET – VALVE ROCKER ARM COVER	6584												
	XT 6584 A	A	B	C									
	XA 6584 AA				2	2	2	2					
SPRING – VALVE ROCKER ARM LOCATING	6587												
	C0DE 6587 A	5	5	5									
WASHER – VALVE ROCKER ARM SHAFT SPRING	6598												
	C0DE 6598 A	2	2	2									
Pin – 1/8" x 1.25" – spring – washer to valve rocker arm shaft	372929 S	2	2	2									
PUMP ASSY. – OIL	6600												
Includes pick-up tube	XA 6600 AA	A	B	C									
Less pick-up tube	CJ 6621 AA	A	B	C									
	D0AZ 6600 B				D	E	F	G					
Dowel – oil pump to cyl. block	378644 S	A	B	C									
Washer – oil pump to cyl. block	34806 S78	2	2	2									
Bolt – oil pump to cyl. block	20386 S36	2	2	2									
Washer – oil pump to cyl. block	34807 S8				4	4	4	4					
Bolt – oil pump to cyl. block	20428 S2				4	4	4	4					
Screw & washer – 3/8" – 16 x 1.25" – oil pump to cyl. block	304722 S36				2	2	2	2					
ROTOR & SHAFT ASSY. – OIL PUMP DRIVE	6608												
	CJ 6608 AA	A	B	C									
	C8SZ 6608 A				D	E	F	G					
COVER – OIL PUMP	6616												
	XY 6616 BA	A	B	C									
	B8A 6616 C				D	E	F	G					
Bolt – ¼" – 20 x 5/8" – att. cover to pump body	42911 S	4	4	4									
Washer – att. cover to pump body	34806 S36	2	2	2									
Bolt – att. cover to pump body	20426 S2	2	2	2									
Washer – att. cover to pump body	34805 S78	2	2	2									
Bolt – att. cover to pump body	20364 S7	2	2	2									
Bolt – att. cover to pump body	20344 S78				4	4	4	4					

DESCRIPTION	PART NUMBER	ENGINE PARTS LIST "A TO L"											
		A	B	C	D	E	F	G	H	I	J	K	L
PLUG – OIL PUMP RELIEF VALVE (ALSO REFER 6666)	6A616												
	D0AZ 6A616 A				D	E	F	G					
SHAFT – OIL PUMP INTERMEDIATE	6A618												
	XY 6A618 A	A	B	C									
	D0AZ 6A618 A				D	E	F	G					
PUMP ASSY. – OIL (REFER 6600)	6621												
SCREEN & COVER ASSY. – OIL PUMP	6622												
	XA 6622 A	A	B	C									
	D1AZ 6622 A				D	E	F	G					
GASKET – OIL PUMP COVER TO INLET TUBE FLANGE	6626												
	CJ 6626 AA	A	B	C									
RING – OIL PUMP INTERMEDIATE TUBE – RETURN SPRING SHAFT RETAINER	6629												
	C4TZ 6629 A				D	E	F	G					
GASKET – OIL PUMP TO BLOCK	6659												
	D0AZ 6659 A				D	E	F	G					
HOSE – CRANKCASE VENT TUBE	6A664												
	XW 6A664 A	A	B	C									
	XA 6A664 A				D								
Filler cap to air cleaner – to 4/73	D0ZZ 6A664 A					E	F						
P.C.V. valve to carburettor – to 4/73	D0AZ 6A664 C					E	F						
From 4/73	XA 6A664 A					E	F						
5/8" I.D.	C8SZ 6A664 A							G					
Clip – hose	R7 21	a/r	a/r	a/r	a/r	a/r	a/r	a/r					
PLUG – CAP OIL PUMP SPRING	6666												
	XY 6666 A	A	B	C	D	E	F	G					
VALVE ASSY. – CRANKCASE VENT REGULATOR	6A666												
	XY 6A666 AA	A	B	C									
	XY 6A666 A				D	E	F	G					
SPRING – OIL PUMP RELIEF VALVE	6670												
	C5AZ 6670 A	A	B	C	D	E	F	G					
PLUNGER – OIL PUMP RELIEF VALVE	6674												
	XY 6674 A	A	B	C									
	C5AZ 6674 A				D	E	F	G					
PAN ASSY. – OIL	6675												
	XY 6675 A	A	B	C									
	D0AZ 6675 A				D	E	F						
	XA 6675 B							G					
Screw & washer – 5/16" – 18 x 0.62" – oil pan retaining	373053 S2	4	4	4									
Screw & washer assy. – ¼" – 20 x 0.62" – oil pan retaining	373071 S	a/r	a/r	a/r	a/r	a/r	a/r	a/r					
SEAL ASSY. – CRANKSHAFT OIL	6700/1												
Front	C0DE 6700 A	A	B	C									
Front	D0AZ 6700 A				D	E	F	G					
Rear – rope type	C90Z 6701 A	2	2	2	2	2	2	2					
Rear – split type	D00Z 6701 A				2	2	2	2					

DESCRIPTION	PART NUMBER	ENGINE PARTS LIST "A TO L"											
		A	B	C	D	E	F	G	H	I	J	K	L
GASKET – OIL PAN	**6710/1**												
R.H.	XY 6710 A	A	B	C									
L.H.	XY 6711 A	A	B	C									
R.H.	XA 6710 AA				D	E	F	G					
L.H.	XA 6711 AA				D	E	F	G					
SEAL – OIL PAN	**6722/3**												
	XY 6722 A	2	2	2									
	D0AE 6723 B				2	2	2	2					
PLUG – OIL PAN DRAIN	**6730**												
	XW 6730 A	A	B	C									
	D1AZ 6730 A				D	E	F	G					
FILTER ASSY. – OIL	**6731**												
	AFL 1	A	B	C	D	E	F	G					
GASKET – OIL PAN DRAIN PLUG	**6734**												
	C20Z 6734 A	A	B	C	D	E	F	G					
INDICATOR ASSY. – OIL LEVEL	**6750**												
	XT 6750 A	A	B	C									
	D0AZ 6750 A				D	E	F	G					
TUBE ASSY. – OIL LEVEL	**6754**												
	XY 6754 A	A	B	C									
	D0AZ 6754 B				D	E	F	G					
Plug – cup – dipstick hole	352532 S	A	B	C									
'O' Ring – tube to block	87031 S94				D	E	F	G					
CAP ASSY. – OIL FILLER	**6766**												
To 12/74	ARC5DE 6766 A	A	B	C									
From 12/74	XB 6766 A*	A	B										
To 12/74	EC 64				D	E	F	G					
From 12/74	XB 6766 A*				D	E	F						
Grommet – oil filler cap – from 12/74	382156 S*	A	B		D	E	F						
ELBOW – OIL FILLER CAP	**6767**												
To 12/74	C8AZ 6767 A				D	E	F	G					
From 12/74	382956 S*	A	B		D	E	F						
GASKET SET – ENGINE OIL PAN	**6781**												
	XY 6781 A	A	B	C									
	XA 6781 A				D	E	F	G					
BRACKET – POSITIVE CRANKCASE VENTILATION HOSE	**6788**												
	D1AZ 6788 A				D	E	F	G					
HOSE – CRANKCASE VENTILATION	**6853**												
From 12/74	XB 6853 B*	A	B		D	E	F						
INSERT – OIL FILTER MOUNTING BOLT	**6890**												
	B8A 6890 A	A	B	C									
	D1AZ 6890 A				D	E	F	G					
RETAINER – CRANKCASE VENTILATOR REGULATOR VALVE	**6A892**												
	381898 S	A	B	C									
	D0AZ 6A892 A				D	E	F	G					

MODEL	NO. OF CYL.	C.I.D.	REMARKS	UNIT	PART NUMBER		
– – 6007 – – REMANUFACTURED EXCHANGE ENGINES							
XA/B	6	200	Long motor	1	XY	6007	ARB
XA/B, ZF/G	6	250	Long motor	1	XY	6007	BRB
XA/B	6	200	Short motor (¾ build)	1	XY	6009	ARB
XA/B, ZF/G	6	250	Short motor (¾ build)	1	XY	6009	BRB
– – 6028/9 – – BRACKET ASSY. – ENGINE FRONT SUPPORT							
XA/B, ZF/G	6	All	R.H.	1	XA	6028	AA
XA/B, ZF/G	8	All	R.H.	1	XA	6028	BA
XA/B, ZF/G	6	All	L.H.	1	XA	6029	AA
XA/B, ZF/G	8	All	L.H.	1	XA	6029	BA
XA/B, ZF/G	6/8	All	Bolt – 3/8" – 16 x 1.00 – att. bracket assy. to body & crossmember	4	20388 S2		
XA/B, ZF/G	6/8	All	Washer – 3/8" flat – att. bracket assy. to body & crossmember	4	44730 S8		
– – 6038 – – INSULATOR ASSY. – ENGINE FRONT SUPPORT							
XA, ZF	6	All		2	C90Z	6038	B
XB, ZG	6	All		2	XA	6038	A
XA/B, ZF/G	8	All		2	C60A	6038	E
XA/B, ZF/G	6/8	All	Washer – 7/16" flat – att insulator to bracket	2	44730 S8		
XA/B, ZF/G	8	All	Nut – 7/16" – 14 – insulator to bracket – O.N.R.	2	376420 S2		
XA/B, ZF/G	8	All	Bolt – 7/16" – 14 x 4.75" – att. insulator to bracket – O.N.R.	2	379699 S2		
– – 6C038 – – SHIELD – ENGINE MOUNT HEAT							
XA/B, ZF/G	8	351	L.H. mount only	1	XW	6C038	B
– – 6046/6B071 – – BRACKET – ENGINE FRONT SUPPORT INSULATOR							
XA/B, ZF/G	6	All	R.H.	1	XY	6046	A
XA/B' ZF/G	6	All	L.H.	1	XY	6B071	A
XA, ZF	6	All	Bolt – 3/8" – 16 x .75" – att. brackets to engine	6	42996 S2		
– – 6A066 – – SPACER – ENGINE REAR SUPPORT							
XA	6	250	IV – sedan only, (180 vehicles only) use with man. trans. – XY-7003-EA – O.N.R.	1	XW	6A066	AA
– – 6068 – – INSULATOR ASSY. – ENGINE REAR SUPPORT							
XA/B, ZF/G	6/8	All		1	XW	6068	C
XA/B, ZF/G	6/8	All	Bolt – ½" – 13 x 1.12" – att. insulator to trans.	2	372821 S2		
XA/B, ZF/G	6/8	All	Nut – insulator to crossmember – 7/16"	2	34446 S8		
– – 6070 – – PLATE – ENGINE REAR SUPPORT							
XA/B, ZF/G	6/8	All		2	C60Z	6070	A
– – 6096 – – BRACKET – ENGINE REAR SUPPORT							
XA, ZF		All	R.H. – to 3/73	1	ARC8DZ	6096	A
XA/B, ZF/G		All	R.H. – from 3/73	1	XA	6096	D
XA/B, ZF/G		All	L.H.	1	XA	6096	E
– – 6120 – – BRACKET – ENGINE REAR SUPPORT (REFER 6096)							
– – 6366 – – COVER – FLYWHEEL HOUSING LOWER – MANUAL TRANS.							
XA/B, ZF/G	6	All		1	XA	6366	A
XA/B, ZF/G	6	All	Bolt – flywheel cover to housing	4	20310 S78		
XA/B, ZF/G	6	All	Washer – flywheel cover to housing	4	34806 S36		
– – 6A373 – – PLATE – ENGINE REAR COVER (REFER 7007)							
– – 6392 – – HOUSING – FLYWHEEL – MANUAL TRANSMISSION							
XA	6	250	IV – 3 speed – column shift (180 vehicles only) use with XY-7003-EA	1	XY	6392	CA
XA/B, ZF	6	All	3 speed – column shift	1	XW	6392	C
XA/B	6	All	4 speed Ford – to 12/73	1	XW	6392	E
XB	6	All	4 speed – Ford – from 1/74	1	XW	6392	C
XB	6	All	4 speed Borg Warner – to 12/73	1	XB	6392	A
XB	6	All	4 speed Borg Warner – from 1/74	1	CJ	6392	BA
XA/B, ZF	8	All	3 speed – column shift	1	XA	6392	AA
XA, ZF	8	All	2V – 4 speed Ford	1	XA	6392	BA

MODEL	NO. OF CYL.	C.I.D.	REMARKS	UNIT	PART NUMBER		
– – 6392 – – HOUSING – FLYWHEEL – MANUAL TRANSMISSION							
XA/B	8	351	4V – 4 speed Ford	1	XA	6392	CA
XA/B	8	351	4 speed Ford – used 250 units (4 bolt main bearing)	1	C5AZ	6392	D
XB	8	All	4 speed – Borg Warner	1	XB	6392	B
XA/B, ZF	6	All	Bolt 7/16" – 14 x 1.7/8" – att. housing assy. to cyl. block	2	20516 S36		
XA/B, ZF	6	All	Dowel – 3/8" x . 75" – align housing to block	2	73279 S		
XA/B' ZF	6/8	All	Bolt – 7/16" – 14 x 2.25" – att. housing to cyl. block	2	20536 S36		
XA, ZF	8	All	Bolt – 7/16" – 14 x 1.5/8" – att. housing to cyl. block	6	20490 S2		
– – 6K631 – – GUARD – ENGINE SUMP							
XA/B' ZF/G	6	All		1	XA	6K631	AA
XA/B, ZF/G	8	All		1	XA	6K631	BA
XA/B, ZF/G	6	All	Bolt – 5/16" – 18 x 1.00" – plate assy. to underbody	2	20386 S36		
XA/B, ZF/G	6/8	All	Nut – 5/16" – 18 – plate assy. to underbody	4	55736 S2		
– – 6C680 – – SPACER – ENGINE SUMP GUARD							
XA/B, ZF/G	6	All		2	XA	6C680	A
– – 6A681 – – COVER ASSY. – DRAIN PLUG ACCESS							
XA/B, ZF/G	6	All		1	XW	6A681	B
XA/B, ZF/G	6	All	Bolt – 3/8" – 16 x .75" – cover assy. to plate assy.	1	20348 S2		
XA/B, ZF/G	6	All	Lockwasher – 3/8" cover to plate assy.	1	34807 S8		

MODEL	NO. OF CYL.	C.I.D.	REMARKS	UNIT	PART NUMBER

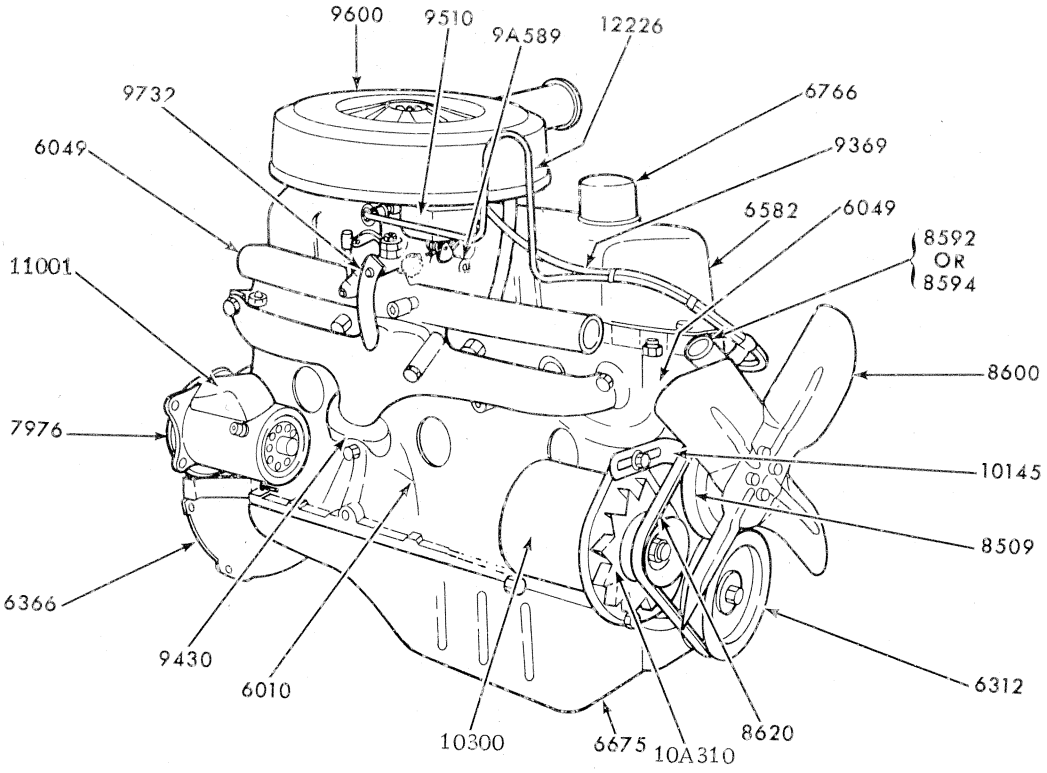

RIGHT-FRONT VIEW

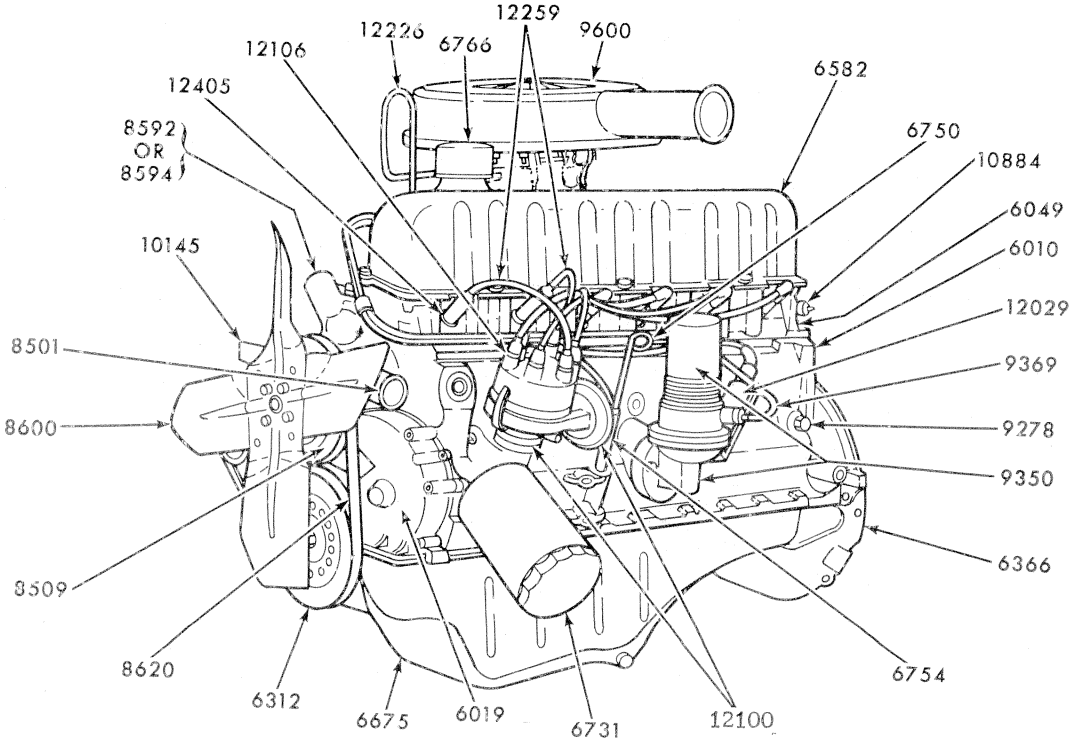

LEFT-FRONT VIEW

ENGINE EXTERIOR – 6 CYLINDER

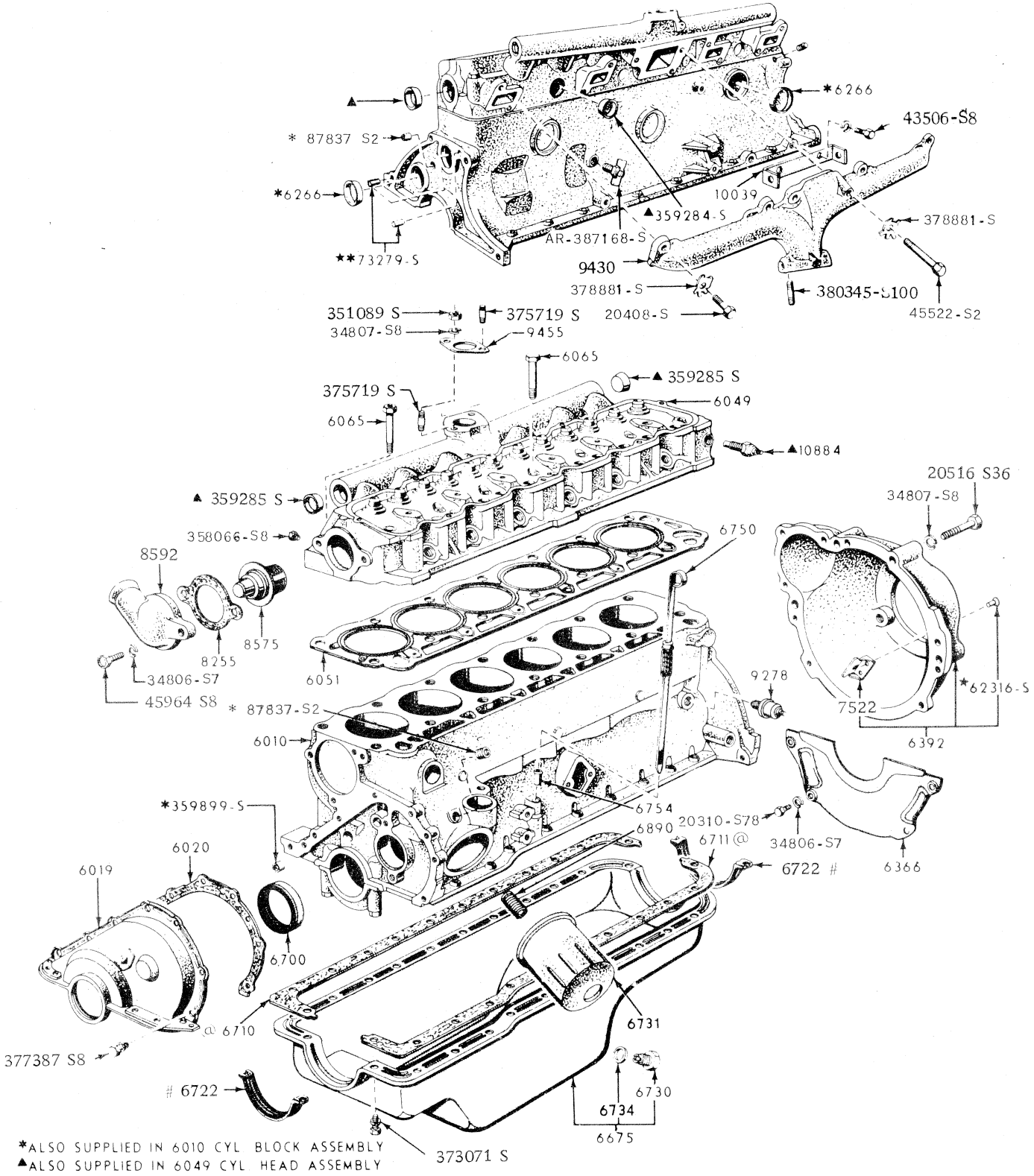

@ Supplied Only In 6781 Kit
# Also Supplied In 6781 Kit

ENGINE INTERIOR – 6 CYLINDER

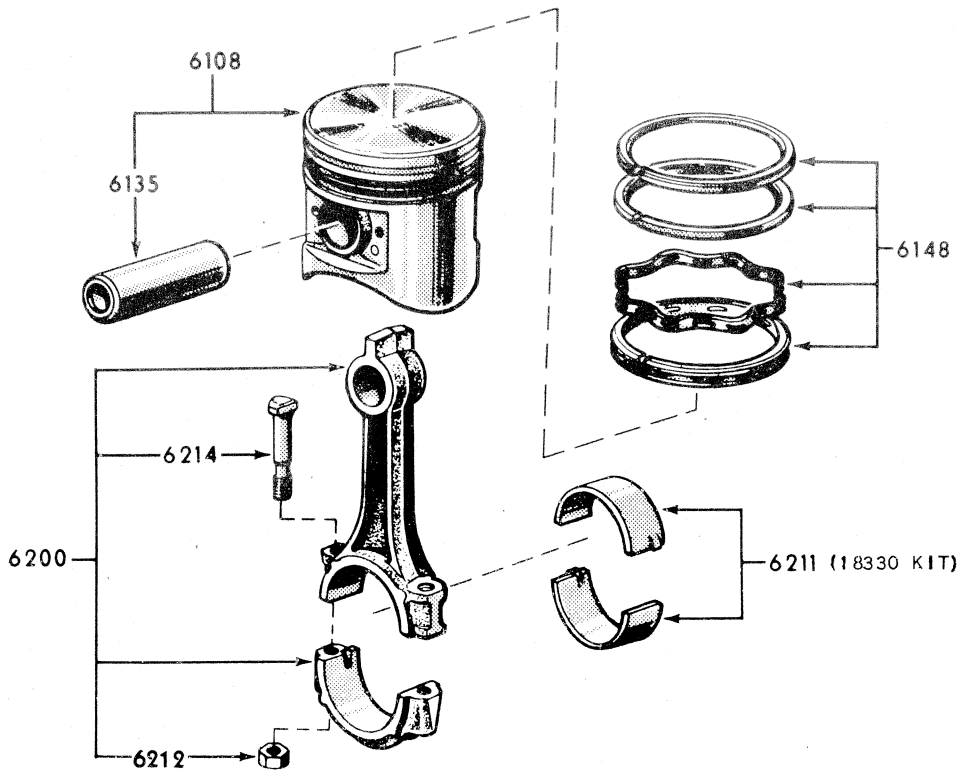

PISTON AND CONNECTING ROD – 6 CYLINDER

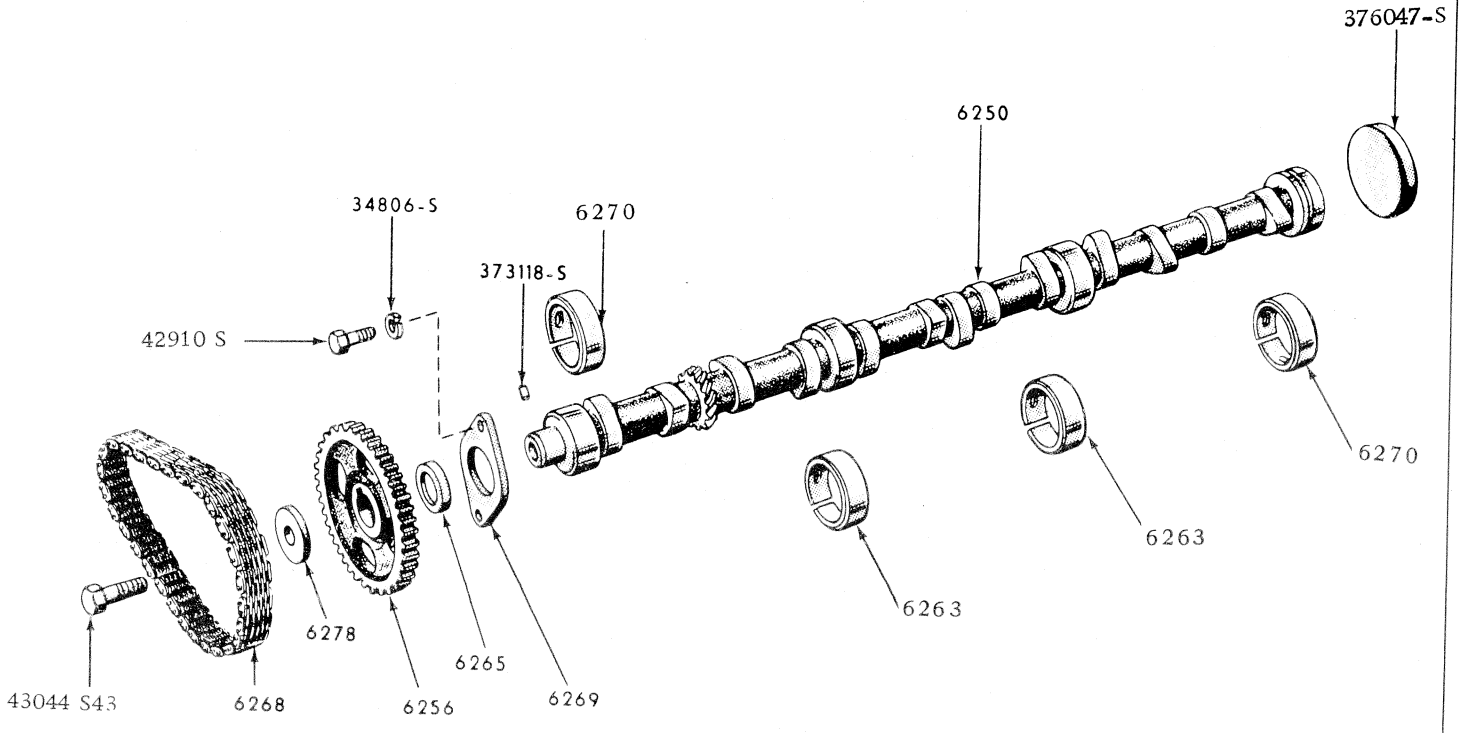

CAMSHAFT AND RELATED PARTS – 6 CYLINDER

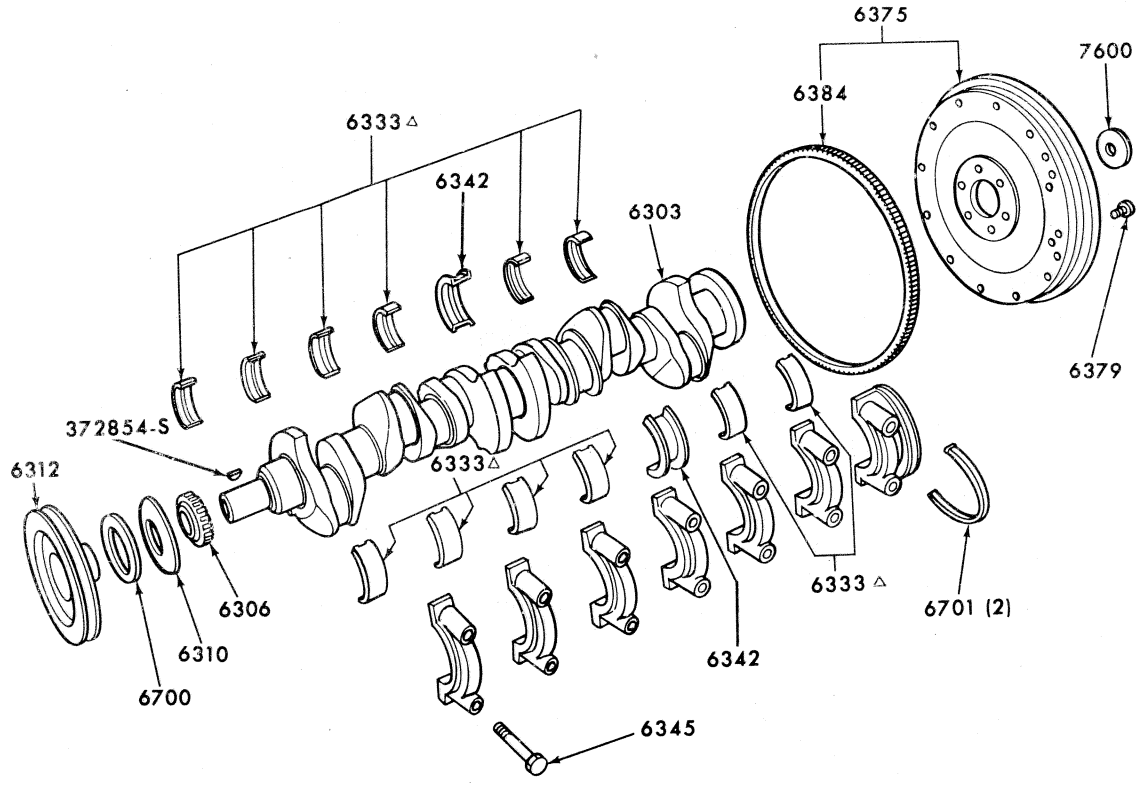

△ ALSO SUPPLIED IN 18347 KIT

CRANKSHAFT AND FLYWHEEL – 6 CYLINDER

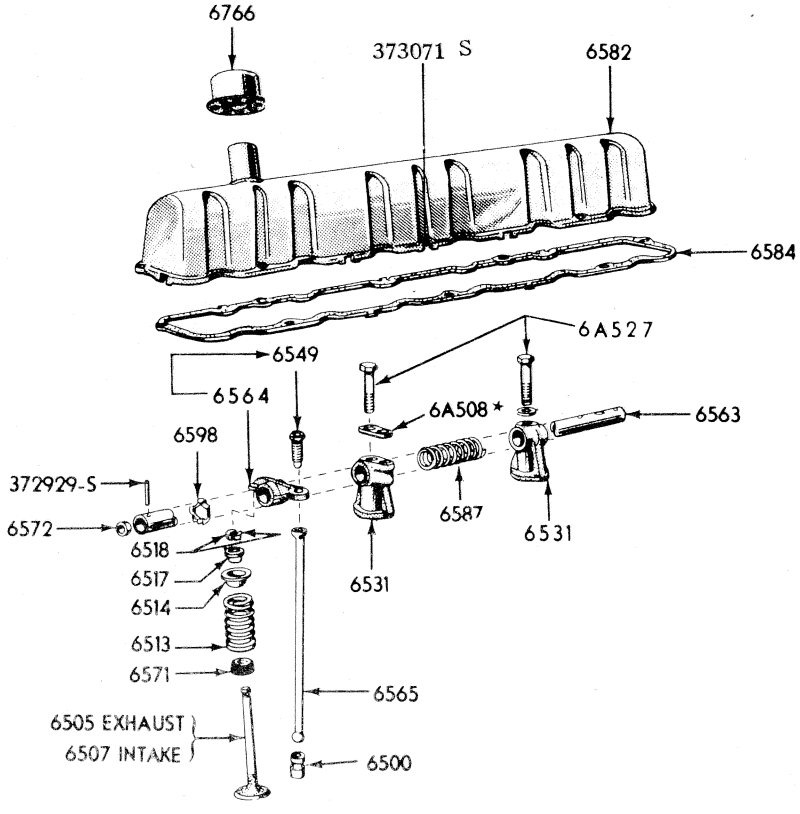

VALVES, PUSH RODS AND ROCKER ARM COVER – 6 CYLINDER

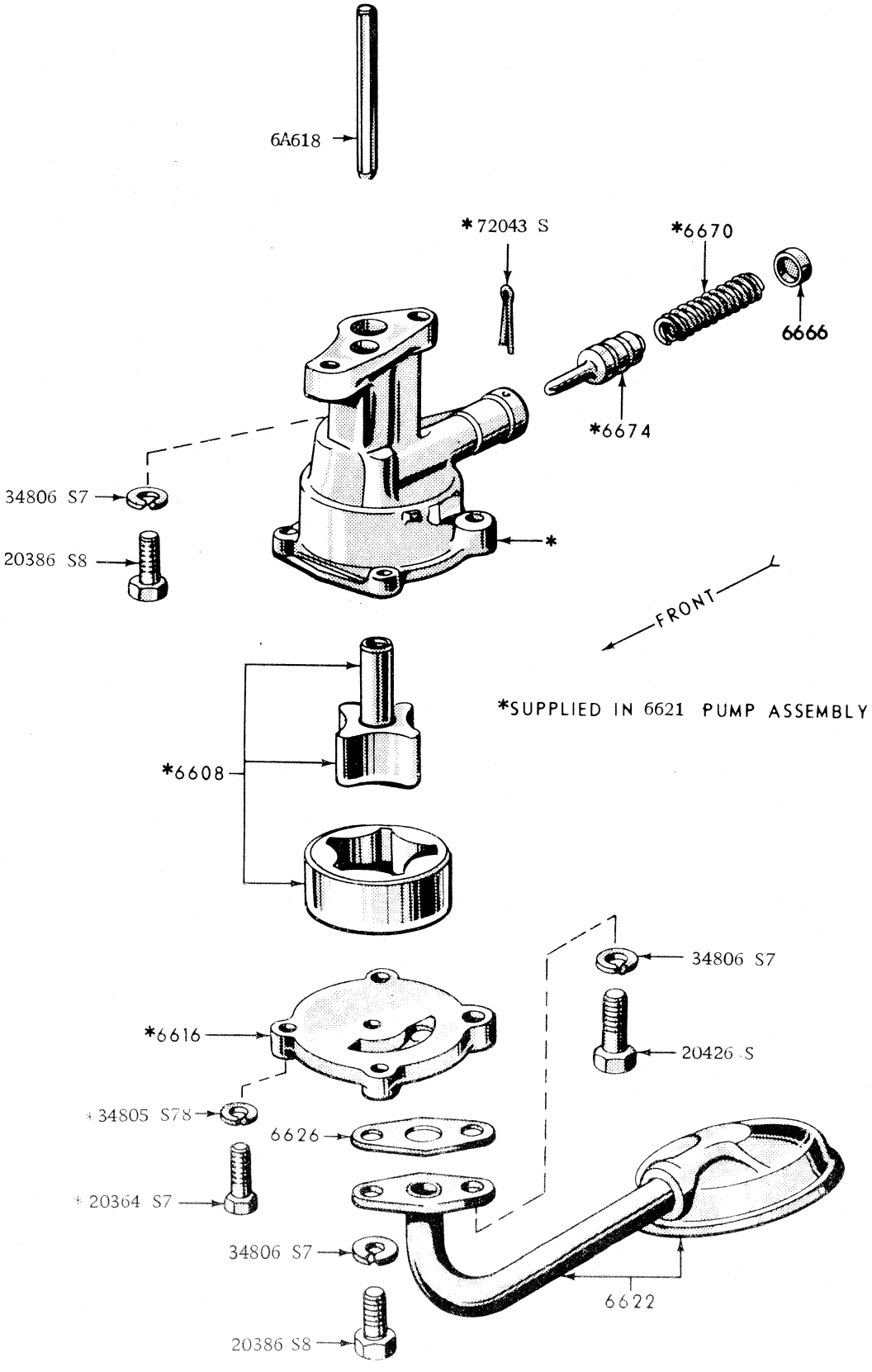

OIL PUMP – 6 CYLINDER

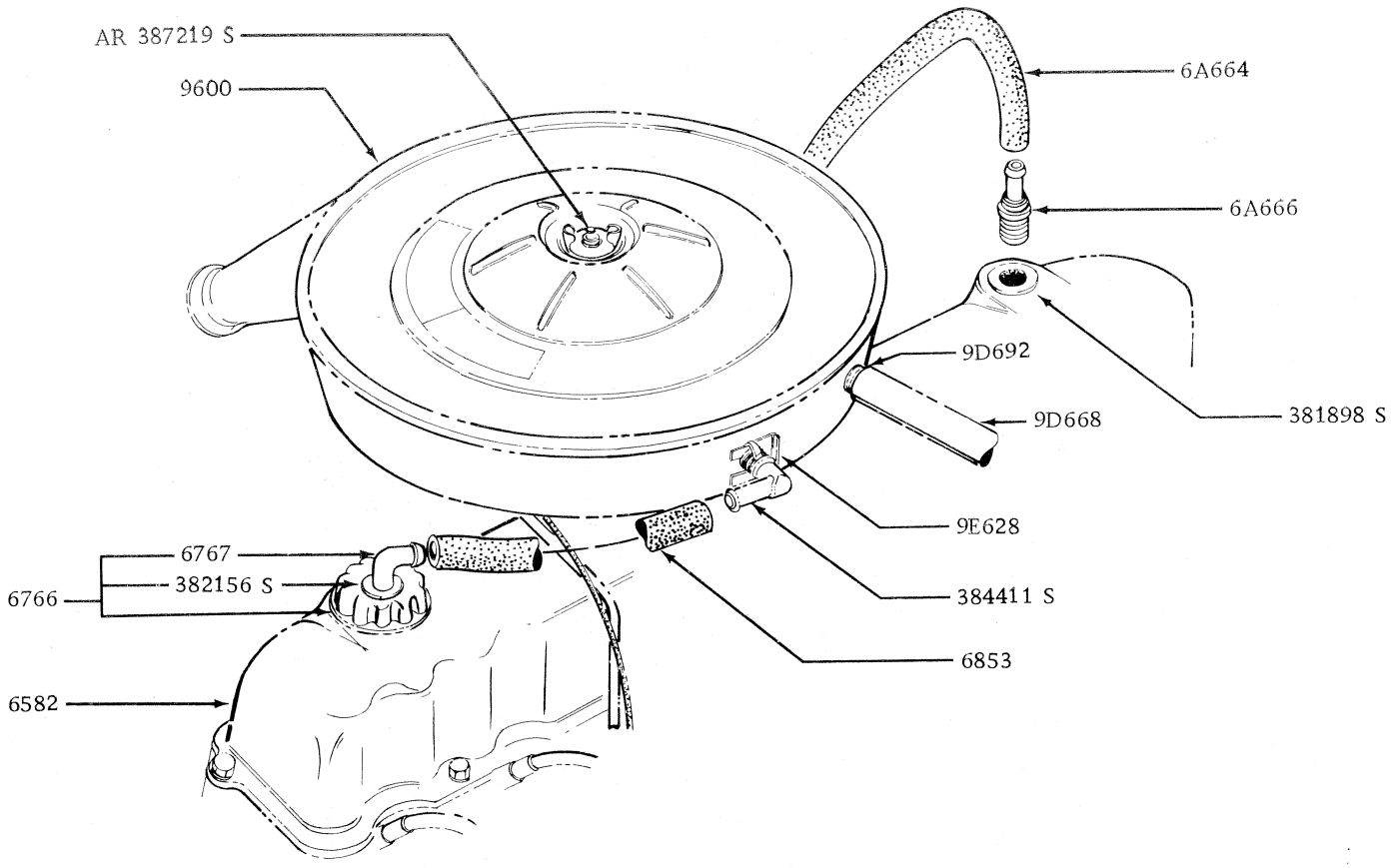

CRANKCASE VENTILATION – 6 CYLINDER

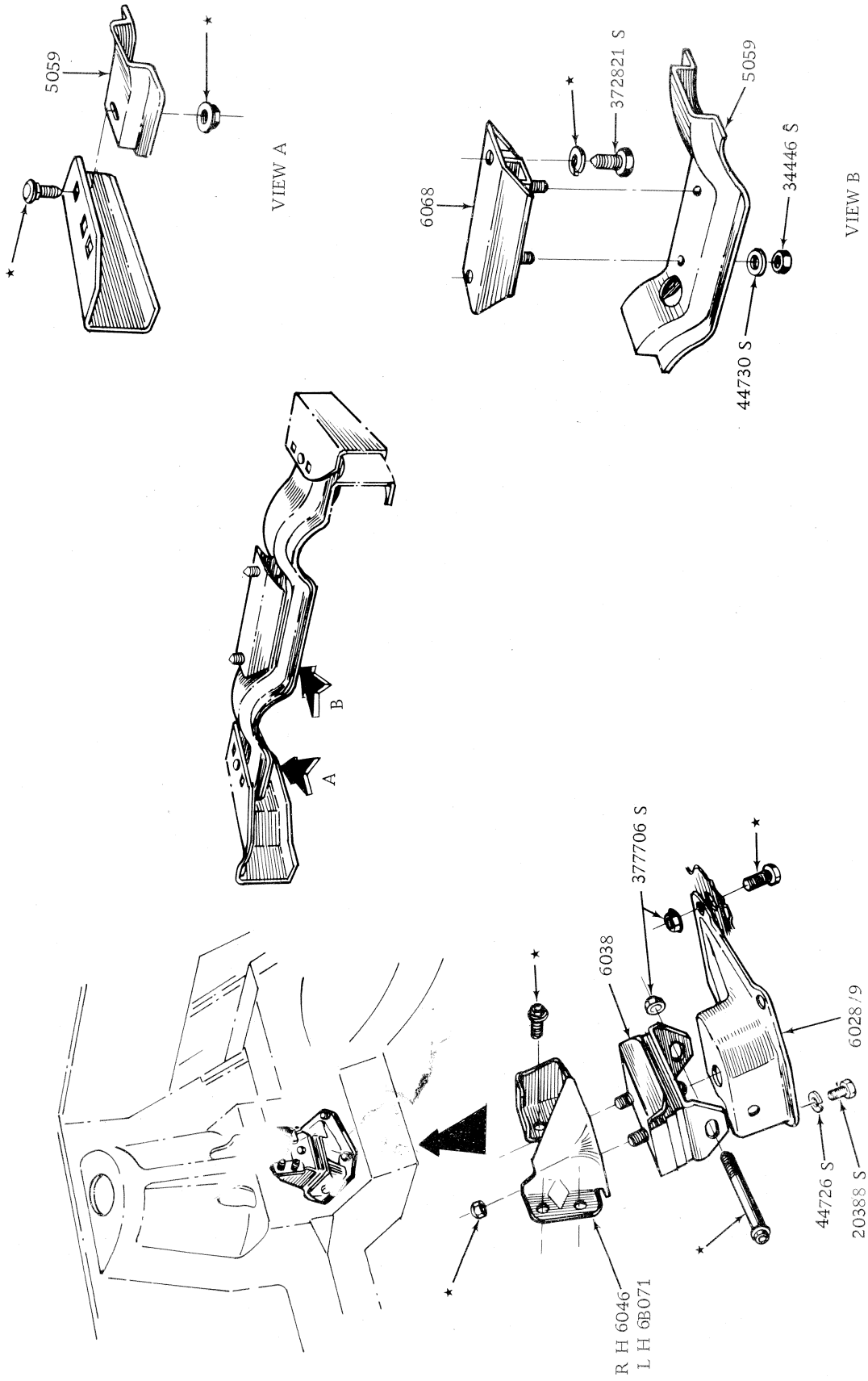

ENGINE SUPPORTS, FRONT AND REAR – 6 CYLINDER

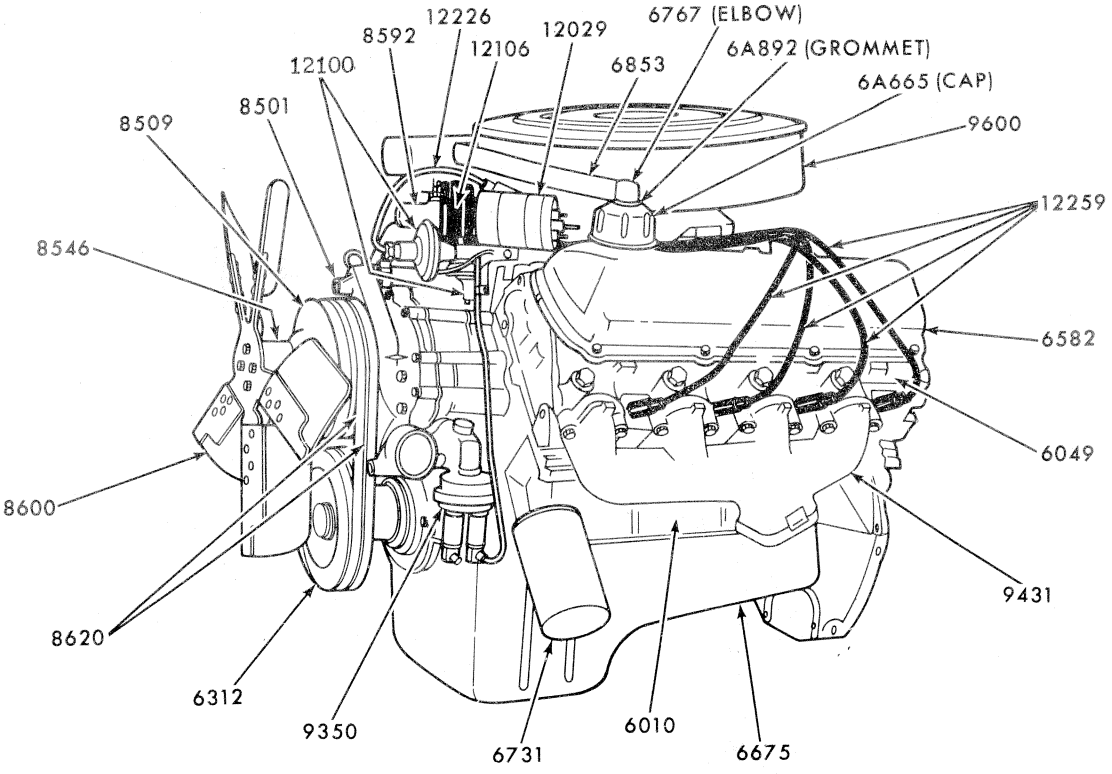

LEFT-FRONT VIEW

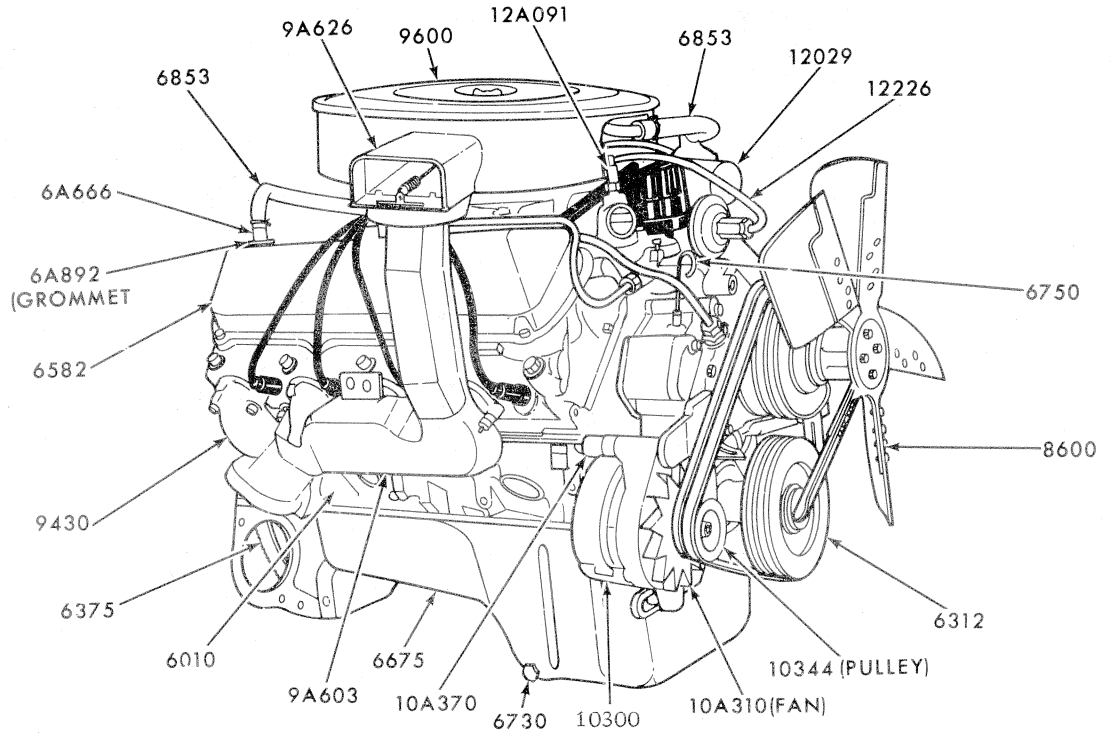

RIGHT-FRONT VIEW

ENGINE EXTERIOR – 8 CYLINDER

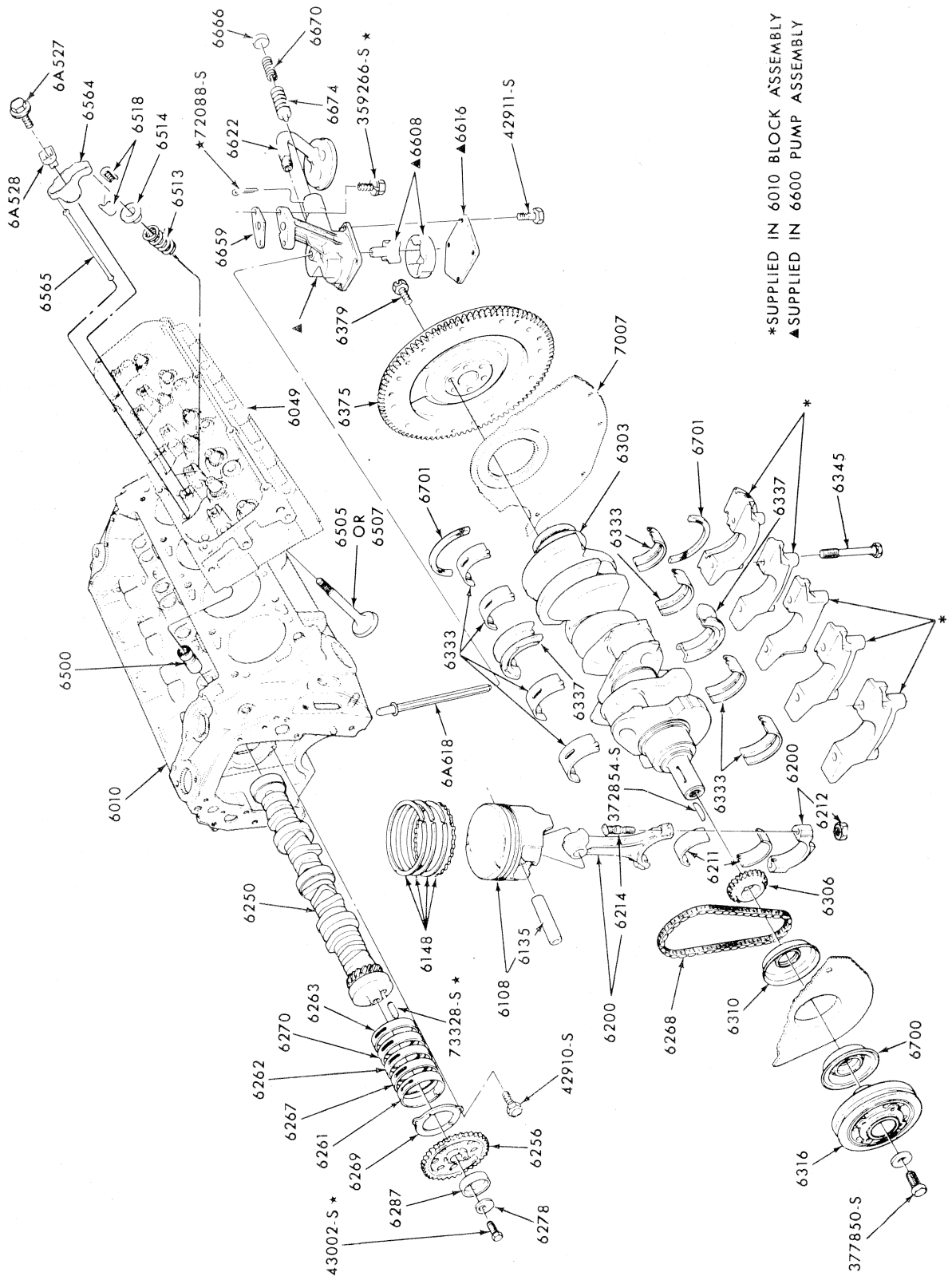

ENGINE INTERIOR – 8 CYLINDER

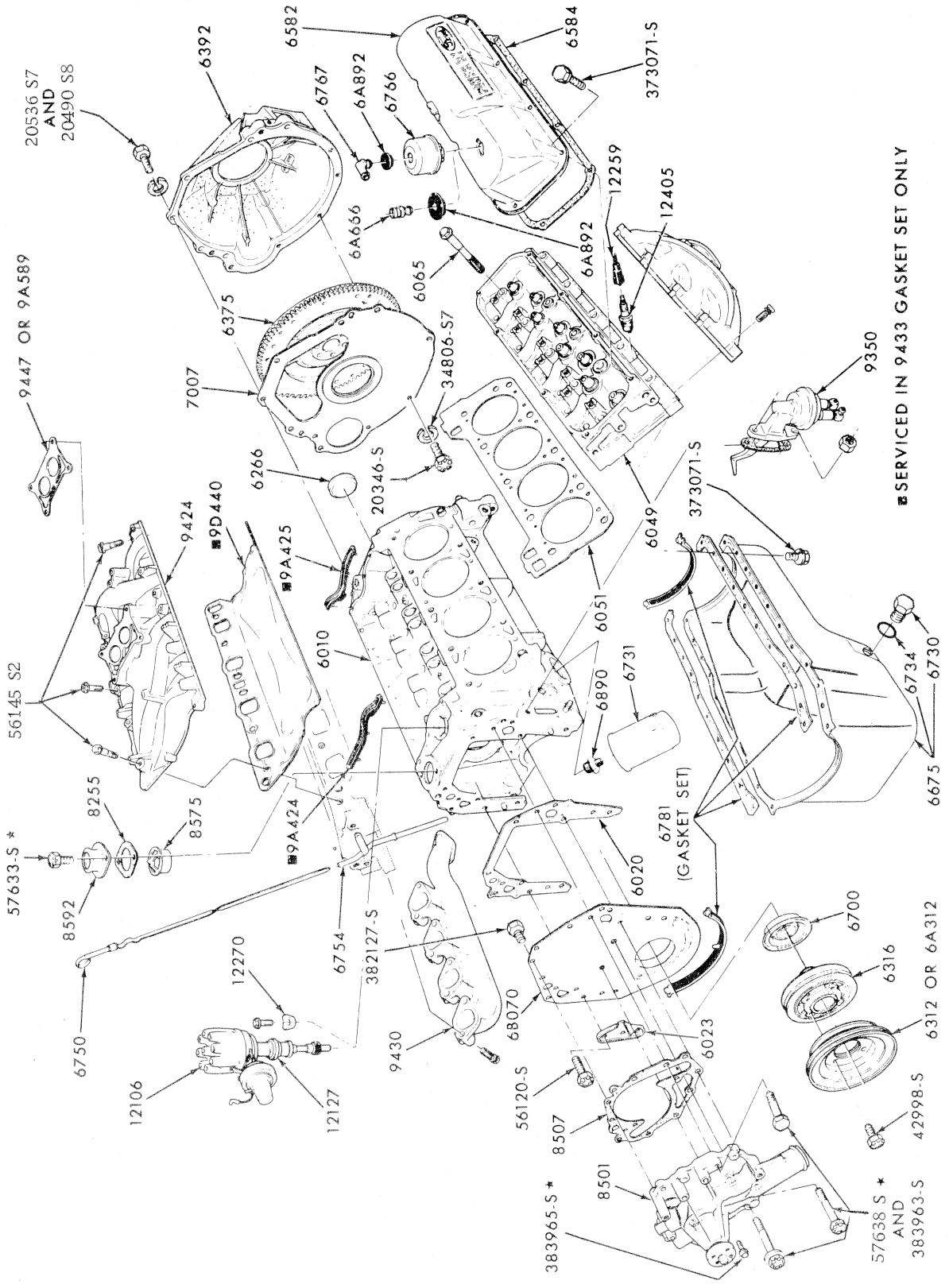

ENGINE INTERIOR – 8 CYLINDER

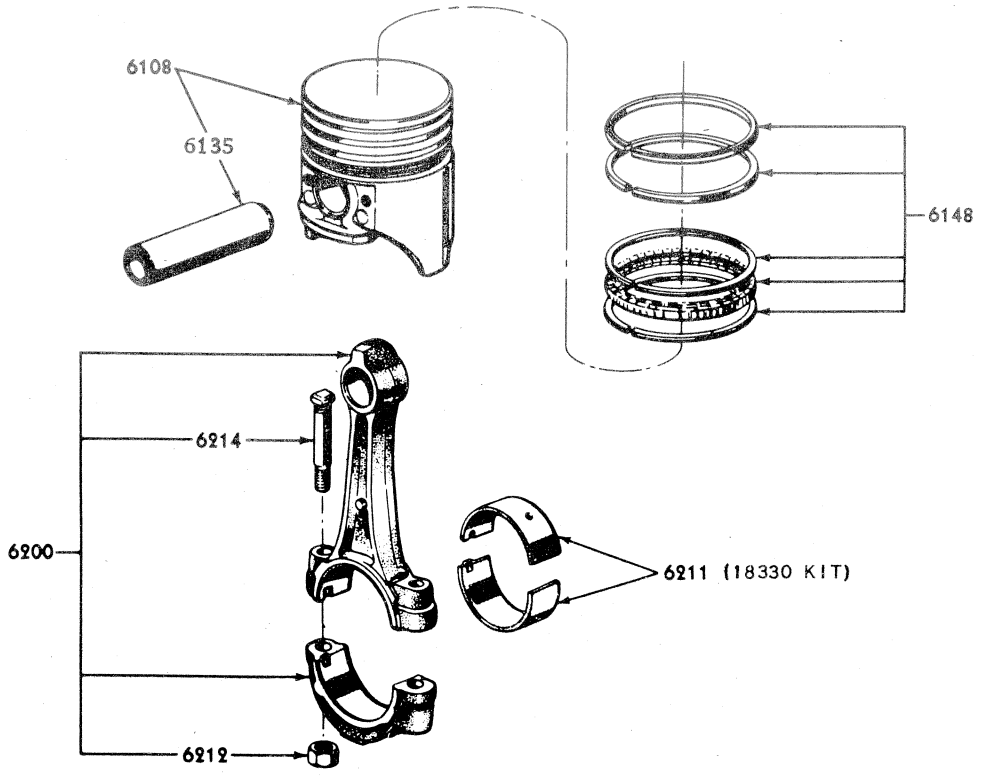

PISTON AND CONNECTING ROD – 8 CYLINDER

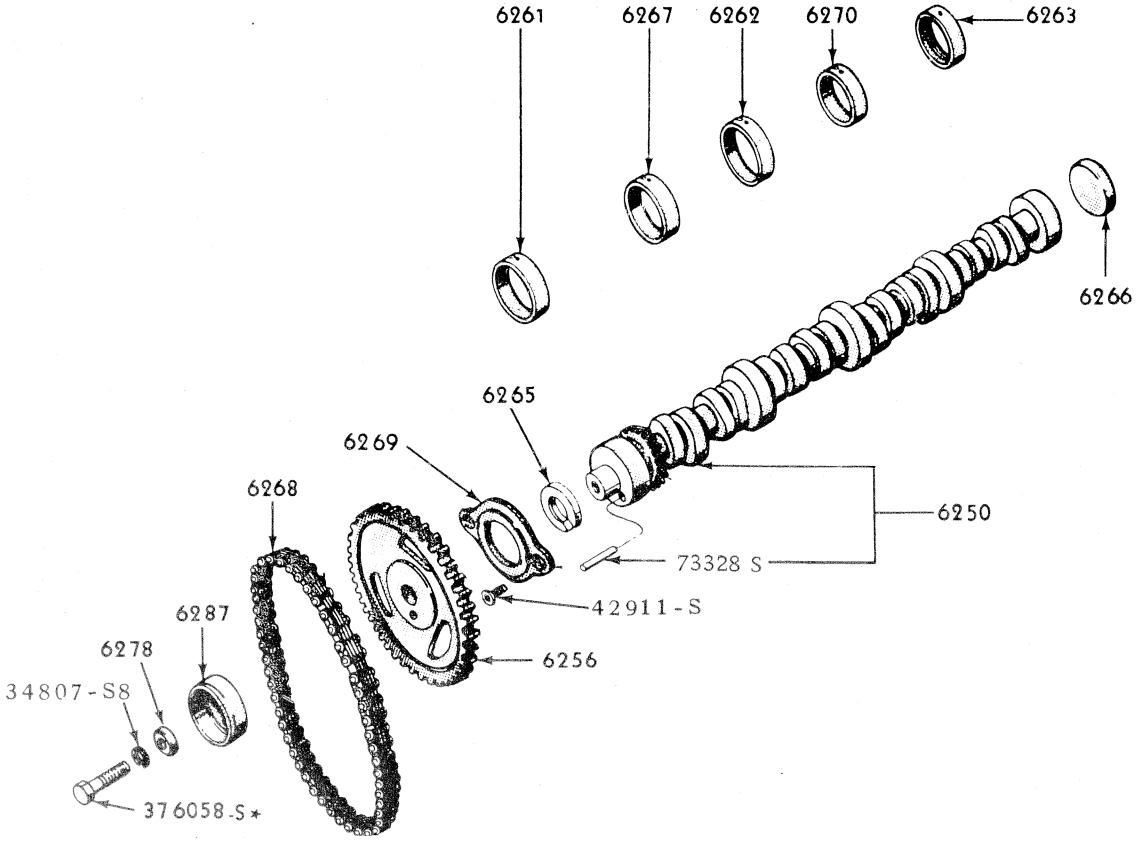

CAMSHAFT AND RELATED PARTS – 8 CYLINDER

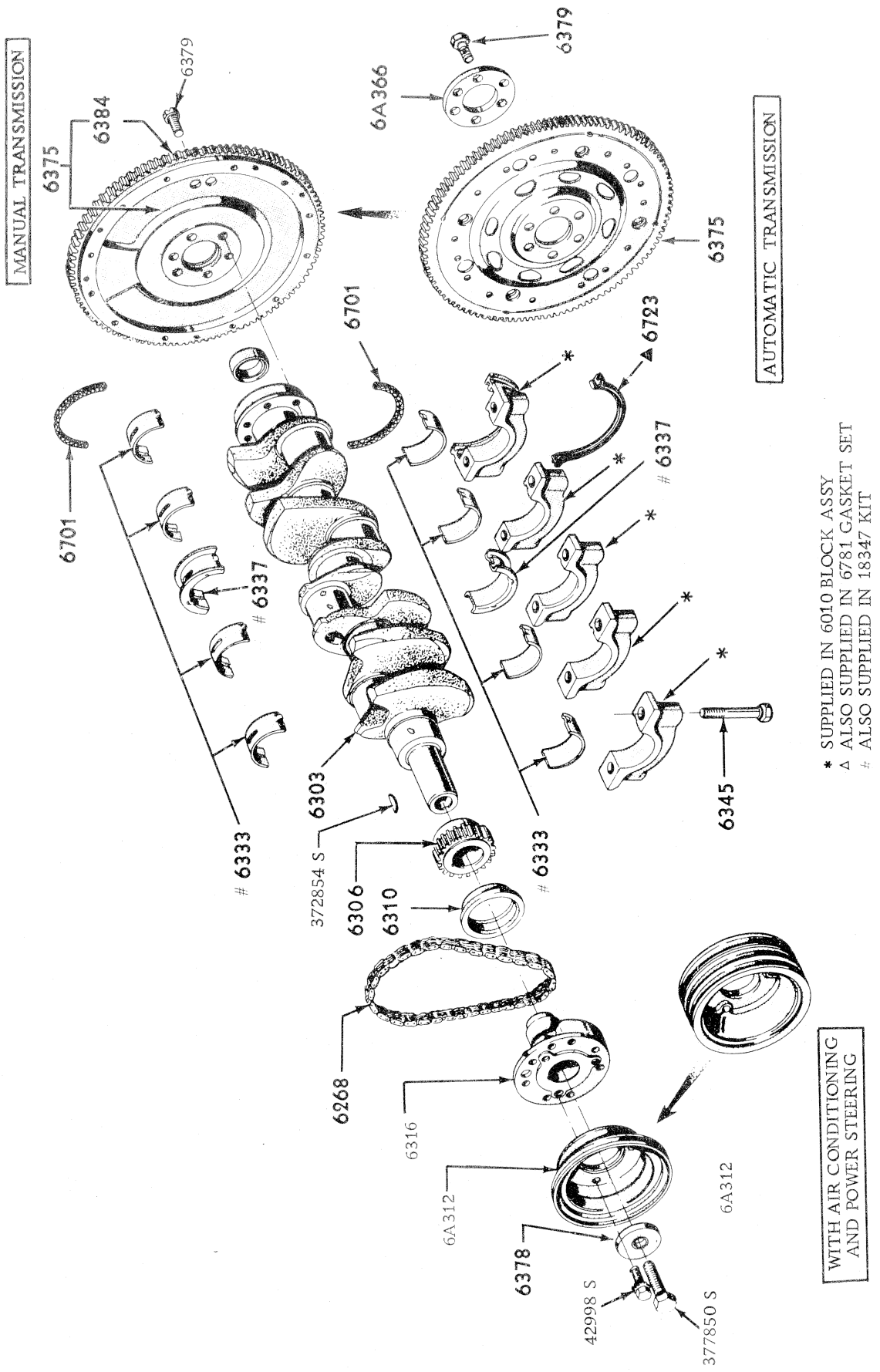

CRANKSHAFT AND FLYWHEEL – 8 CYLINDER

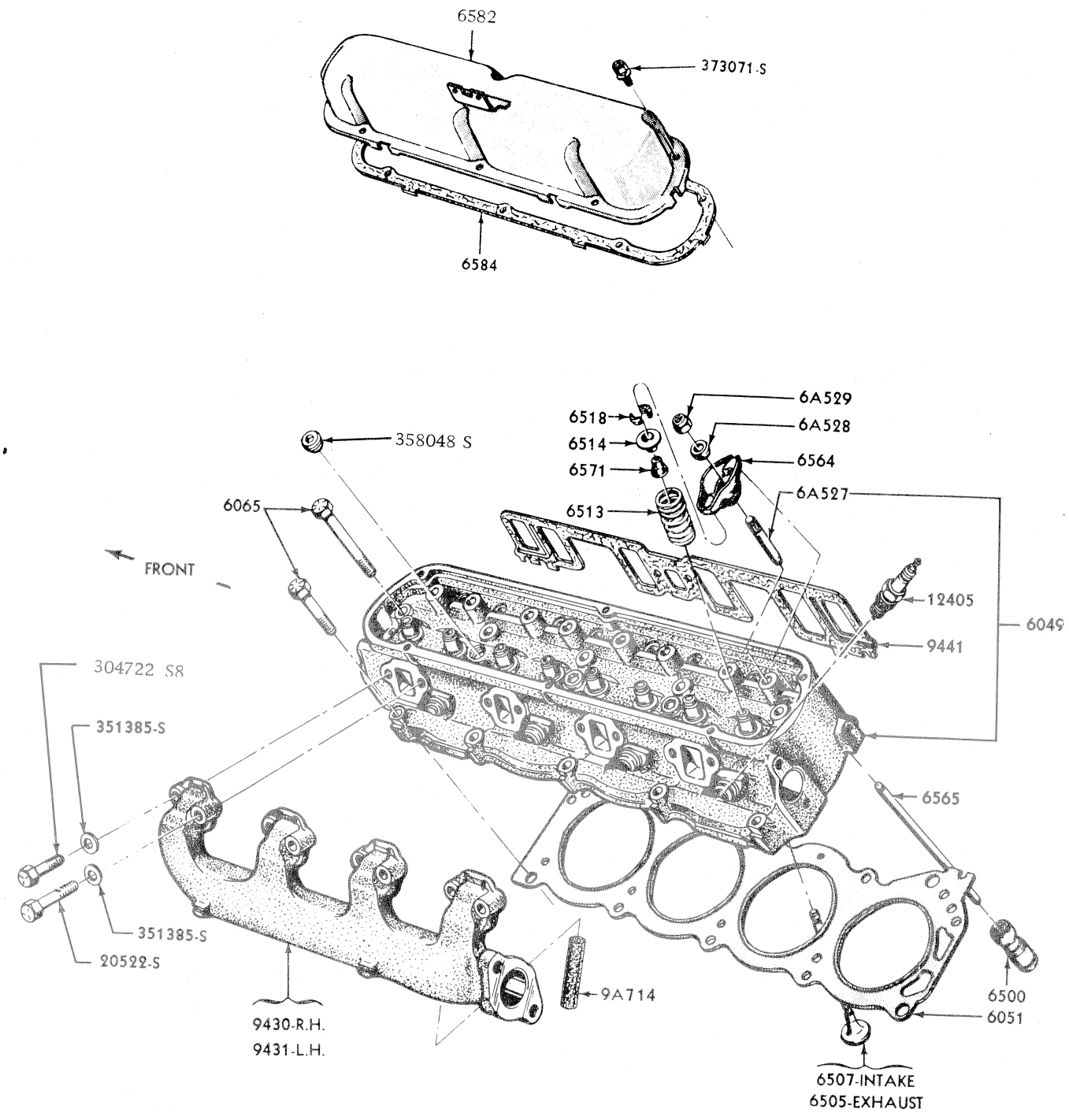

VALVES, PUSH RODS AND ROCKER ARM COVER – 8 CYLINDER

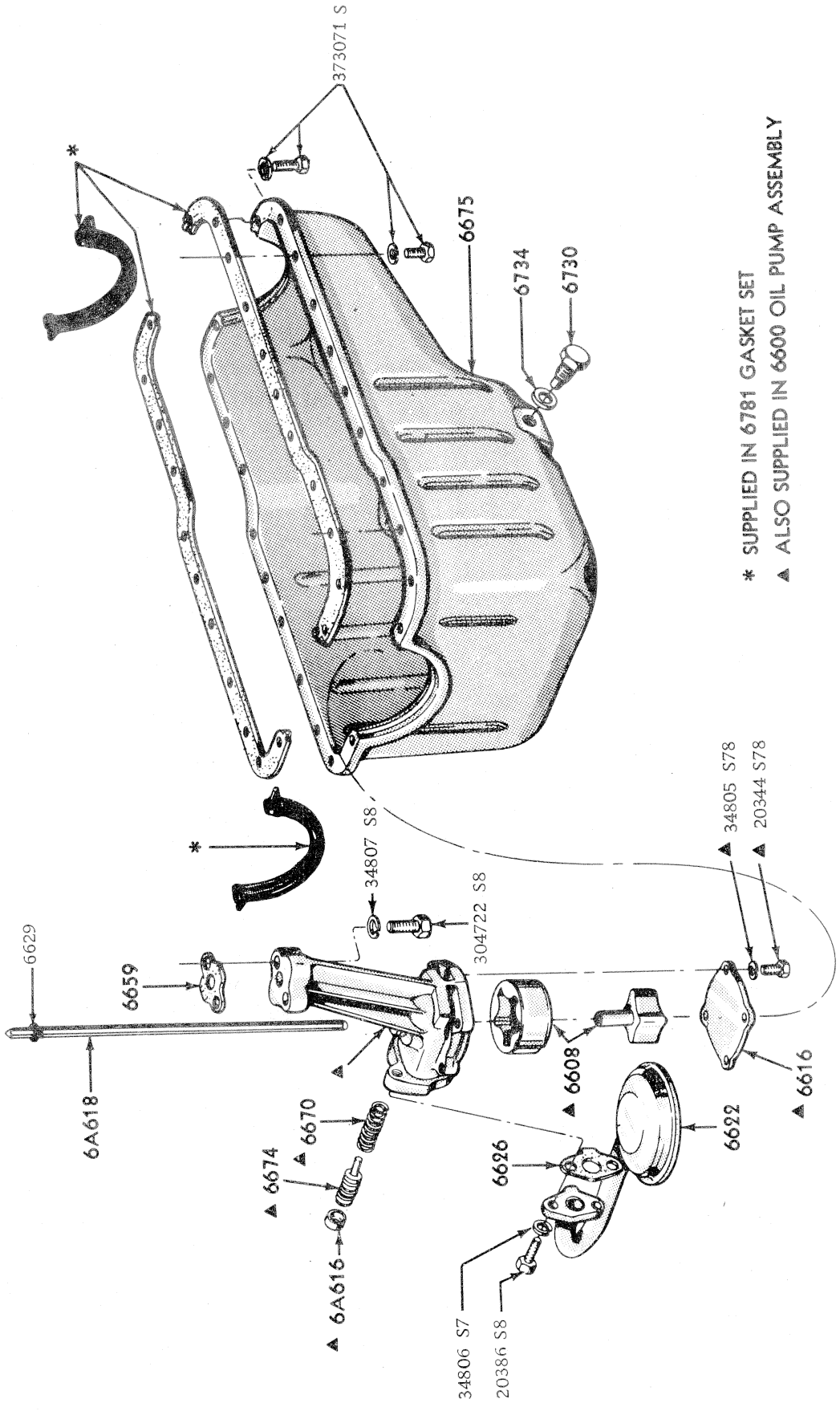

OIL PUMP AND SUMP – 8 CYLINDER

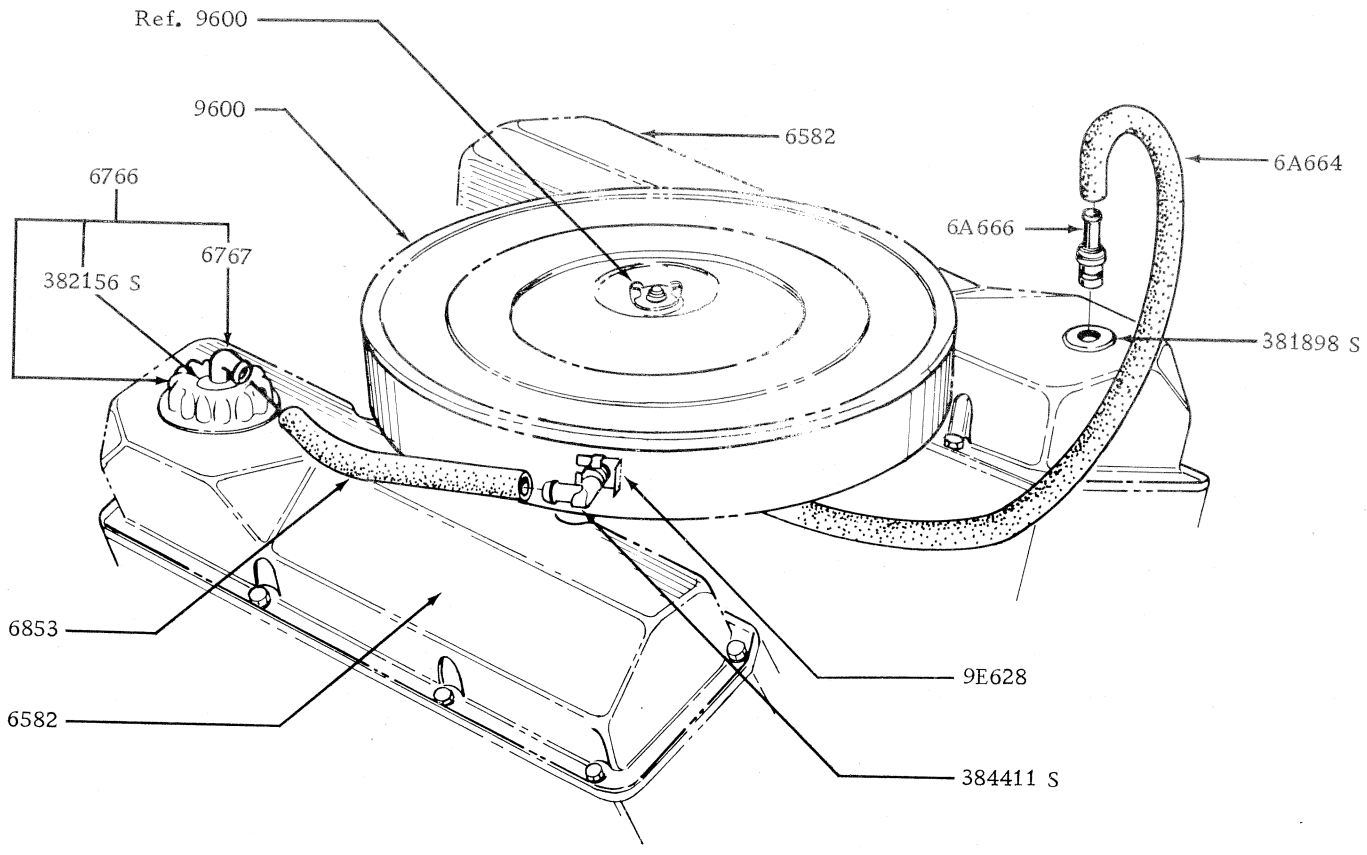

CRANKCASE VENTILATION – 8 CYLINDER

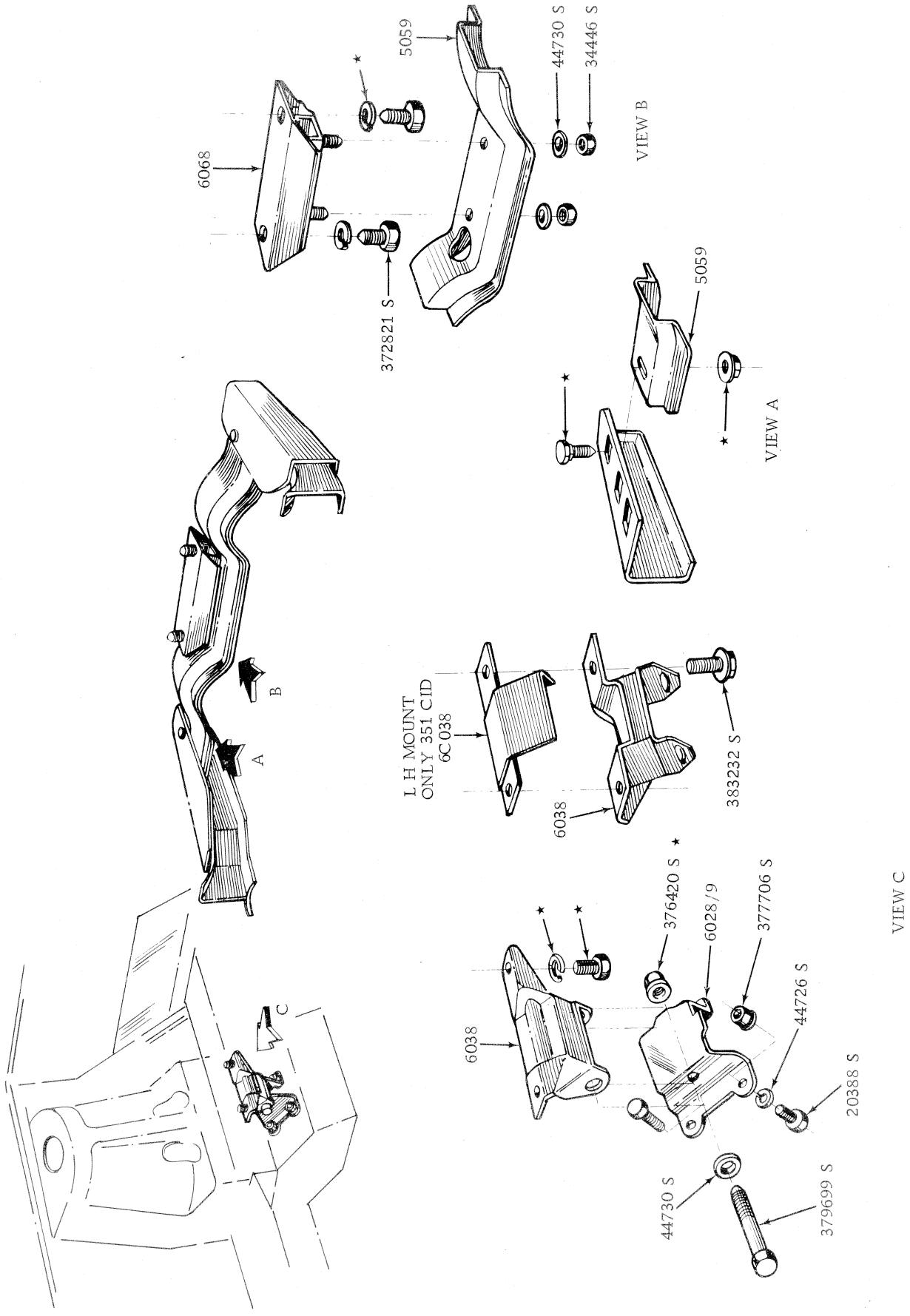

ENGINE SUPPORTS, FRONT AND REAR – 8 CYLINDER

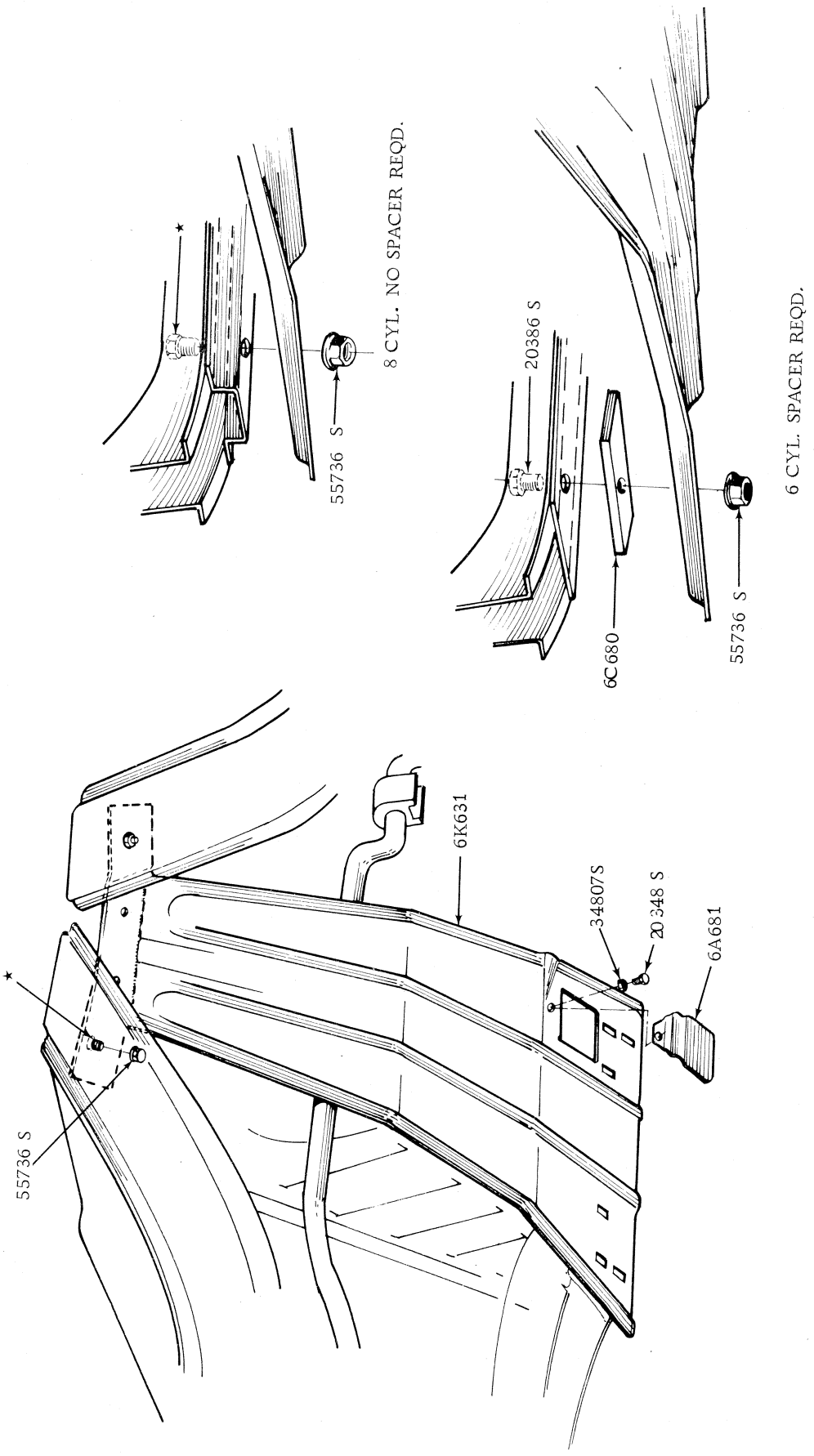

ENGINE SUMP GUARD

HOW TO IDENTIFY MANUAL TRANSMISSION PARTS

1. Locate the identification tag or plate on the transmission case. If the transmission case is replaced, transfer the tag to the new case so that identification will not be lost.

2. Refer to the 'Manual Transmission Application Chart' to find the parts list for the model.

   Example: An XB Fairmont Sedan built before 11/74 with a 4 speed Borg Warner transmission identified 74DA/AA uses parts list P.

   Turn to the parts list and select the component part required.

   Gasket kit part numbers are shown at the beginning of the parts list. Immediately following the "Transmission Parts List", the Ford basic groups are continued.

MANUAL TRANSMISSION APPLICATION CHART

MODEL/YEAR RANGE	BODY TYPE	ENGINE	SPEED	TRANSMISSION TYPE	IDENTIFICATION	PART NUMBER	REPLACED BY	PARTS LIST
XA, ZF	All	200 c.i.d.	3	Ford—Partial Synchro	72DA/DA/DB	XA 7003 DA		A
XA, ZF	All	200/250 c.i.d. 1V	3	Ford—Full Synchro	72DA/AB	XA 7003 AB	XB 7003 AC	B
XA, ZF	All	250 c.i.d. 2V	3	Ford—Full Synchro	72DA/CA	XA 7003 CA		C
XA, ZF	All	302 c.i.d.	3	Ford—Full Synchro	72DA/BA/BB	XA 7003 BA		D
XA	54	250 c.i.d. 1V	3	Ford—Full Synchro	ARD1RD/EA	XA 7003 EA ▲	Components	E
XB, ZG	All	200/250 c.i.d.	3	Ford—Full Synchro	72DA/AC	XB 7003 AC		F
XB, ZG — To 5/74	All	302 c.i.d.	3	Ford—Full Synchro	72DA/BC	XB 7003 BC		G
XB, ZG — From 5/74	All	302 c.i.d.	3	Ford—Full Synchro	74DA/CA	XB 7003 CA		H
XA/B	All Exc. 54H, 65H	All Exc. 351 c.i.d. 4V	4	Ford—Top Opening	RUG/BF1	XA 7003 D		M
XA/B	54H 65H	351 c.i.d. 4V	4	Ford—Top Opening	RUG/BA	D00Z 7003 J ϕ		N
XA/B	54H 65H	351 c.i.d. 4V	4	Ford—Top Opening	RUG/BG1	XA 7003 FA	Components	O
XB — To 11/74	All Exc. 54H, 65H	All Exc. 351 c.i.d. 4V	4	B/W — Single Rail	74DA/AA	XB 7003 A		P
XB — From 11/74	All Exc. 54H, 65H	All Exc. 351 c.i.d. 4V	4	B/W — Single Rail	74DA/AB	XB 7003 AB		Q
XB	54H, 65H	351 c.i.d. 4V	4	B/W — Single Rail	74DA/BA	XB 7003 B		R

▲ Used On 180 Vehicles Only.

ϕ Used On 33 Vehicles Only.

DESCRIPTION	PART NUMBER	MANUAL TRANSMISSION PARTS LIST "A TO L"											
		A	B	C	D	E	F	G	H	I	J	K	L
KIT – GASKET TRANSMISSION	7153												
	ARC6DR 7153 A	A	B			E	F						
	XT 7153 A			C	D			G	H				
CASE ASSY. – TRANSMISSION	7005/6												
	XW 7005 D	A	B										
	XY 7005 A			C	D	E							
	XB 7005 B						F						
	XB 7005 C							G	H				
Plug ½" filler	87732 S	A	B	C	D	E	F	G	H				
Plug 13/16" welch	74114 S	A	B	C	D	E	F	G	H				
Plug magnetic drain	373719 S	A	B	C	D	E	F	G	H				
SHAFT – INPUT	7017												
	XA 7017 A	A	B				F						
	XT 7017 B			C	D	E		G	H				
BEARING – MAIN DRIVE GEAR	7025												
Input	XA 7025 A	A	B	C	D	E	F	G	H				
Output	XA 7025 A	A	B				F	G	H				
Output	XT 7065 A			C	D	E							
RING – SNAP (REFER 7064)	7026												
GEAR – LOW SPEED CONSTANT MESH	7A029												
	XT 7A029 A		B				F						
	ARC8DR 7A029 A			C	D	E		G	H				
VENT ASSY.	7034												
	XA 7034 A	A	B	C	D		F	G	H				
	XR 7034 A					E							
BUSHING – EXTENSION HOUSING	7A034												
	XA 7A034 A	A	B	C	D		F	G	H				
	B3TZ 7A034 A					E							
COVER – CASE ACCESS (REFER GROUP 7222)	7A035												
CLIP – TRANSMISSION COVER	7B035												
	XB 7B035 A						F	G	H				
GASKET – CASE ACCESS COVER (REFER GROUP 7223)	7A036												
WASHER – CAMSHAFT GEAR THRUST REAR INNER	7A037												
	ARC6DR 7A037 A	A	B	C	D	E	F	G	H				
WASHER – CAMSHAFT GEAR THRUST REAR OUTER	7A038												
	ARC6DR 7A038 A	A	B	C	D	E	F	G	H				
EXTENSION ASSY. – TRANSMISSION	7A039												
For units with 7 tooth speedo driving gear also supply XA-17285-C (8 tooth) plus 17271 as per chart (Ref Sect. 170)	XA 7A039 B	A	B	C	D		F	G	H				
	ZB 7A039 A					E							
Bolt – 7/16" – 14 x 1¼" – housing to case	20430 ES2B	6	6	6	6	6	6	6	6				
	34808 S78	a/r	a/r	a/r	a/r	a/r	a/r	a/r	a/r				
BAFFLE – MAIN GEAR BEARING OIL	7040												
	ARC6DR 7040 A	A	B	C	D	E	F	G	H				
INSERT – SYNCHRONIZER CLUTCH HUB	7A044												
First & third	XW 7116 A	3	3	3	3	3	3	3	3				
First & reverse	ARC6DR 7A044 B		3	3	3	3	3	3	3				

DESCRIPTION	PART NUMBER	MANUAL TRANSMISSION PARTS LIST "A TO L"											
		A	B	C	D	E	F	G	H	I	J	K	L
RETAINER – INPUT SHAFT BEARING	7050												
3 Stud holes	XA 7050 A	A	B				F						
	XT 7050 B			C	D	E							
4 Stud holes	XB 7050 B								H				
Bolt bearing retainer – 5/16" – 18 x 7/8"	20386 S36	3	3	3	3	3	3	3	3				
Lockwasher bearing retainer – 5/16"	34956 S	3	3	3	3	3	3	3	3				
GASKET – INPUT SHAFT BEARING	7051												
	ARC6DR 7051 A	A	B				F						
	ARC8DR 7051 A			C	D	E		G	H				
OIL SEAL – EXTENSION HOUSING	7052												
	XB 7052 A	A	B	C	D		F	G	H				
	WAA 7052 A					E							
SNAP RING – MAINSHAFT 1ST, 2ND, 3RD, REVERSE SYNCHRO & SPEEDO GEAR (ALSO REFER 17285)	7059												
First & reverse	ARC6DR 7059 A		B	C	D	E	F	G	H				
Second & third	ARC6DR 7064 A	a/r	a/r	a/r	a/r	a/r	a/r	a/r	a/r				
SHAFT – OUTPUT (ALSO REFER 7A061)	7061												
	XA 7061 A		B	C	D		F	G	H				
	XT 7061 A					E							
SHAFT & GEAR ASSY. – OUTPUT	7A061												
	XA 7A061 A	A											
RING – SNAP (ALSO REFER 7059 & 17285)	7064												
Input shaft – bearing to shaft	ARC6DR 7064 A	A	B	C	D	E	F	G	H				
Output shaft – bearing to shaft	ARC6DR 7064 A	A	B	C	D	E	F	G	H				
Input shaft – bearing to shaft	ARC6DR 7064 B	A	B	C	D	E	F	G	H				
Output shaft – bearing to shaft	ARC6DR 7064 B	A	B	C	D	E	F	G	H				
Input shaft – bearing to shaft	ARC6DR 7064 C	A	B	C	D	E	F	G	H				
Output shaft – bearing to shaft	ARC6DR 7064 C	A	B	C	D	E	F	G	H				
Input shaft – bearing to shaft	ARC6DR 7064 D	A	B	C	D	E	F	G	H				
Output shaft – bearing to shaft	ARC6DR 7064 D	A	B	C	D	E	F	G	H				
Input shaft – bearing to case	ARC6DR 7026 A	A	B	C	D	E	F	G	H				
Speedo gear to shaft	XA 7064 A								H				
BEARING – OUTPUT SHAFT (REFER 7025)	7065												
WASHER – TAB M/DRIVE M/SHAFT	7071												
	XT 7071 B	2	2	2	2	2	2	2	2				
GASKET – EXTENSION HOUSING	7086												
	ARC6DR 7086 A	A	B	C	D	E	F	G	H				
GEAR TRANS. LOW & REVERSE (NOT SERVICED)	7100												
GEAR ASSY. – SECOND SPEED	7102												
	XT 7102 A	A	B			E	F		H				
	XT 7102 B			C	D			G					
RING – SYNCHRONIZER BLOCKING	7107												
First	XT 7107 B		B	C	D	E	F	G	H				
Second & third	XR 7107 A	2	2	2	2	2	2	2	2				
SPRING – SYNCHRONIZER RETAINER	7109												
2nd & 3rd	XY 7109 A	2	2	2	2	2	2	2	2				

DESCRIPTION	PART NUMBER	A	B	C	D	E	F	G	H	I	J	K	L
COUNTERSHAFT	7111												
	ARC6DR 7111 A	A	B	C	D	E	F	G	H				
GEAR – COUNTERSHAFT	7113												
	ARC6DR 7113 A	A											
	ARC6DR 7113 B		B				F						
	ARC8DR 7113 A			C	D	E		G					
	XB 7113 C								H				
SPACER – C/SHAFT GEAR BEARING	7115												
	ARC6DR 7115 A	A	B	C	D	E	F	G	H				
PLATE – SYNCHRONIZER SHIFTER PLATE (REFER GROUP 7A044)	7116												
WASHER – C/SHAFT GEAR THRUST	7119												
	ARC6DR 7119 A	A	B	C	D	E	F	G	H				
	ARC6DR 7119 B	5	5	5	5	5	5	5	5				
ROLLER – INPUT SHAFT PILOT BEARING	7120												
	ARC6DR 7120 A	15	15	15	15	15	15	15	15				
ROLLER – COUNTERSHAFT BEARING	7121												
	ARC6DR 7121 A	66	66	66	66	66	66	66	66				
SYNCHRONIZER ASSY.	7124												
First & reverse	ARC6DR 7124 B		B	C	D	E	F	G	H				
Second & third	ARC6DR 7124 A	A	B	C	D	E	F	G	H				
SHAFT – REVERSE IDLER GEAR	7140												
	ARC6DR 7140 A	A	B	C	D	E	F	G	H				
GEAR & BUSHING ASSY. – REVERSE IDLER	7141												
	ARC6DR 7141 A	A											
	ARC6DR 7141 B		B				F						
	ARC8DR 7141 A			C	D	E		G	H				
ROLLER – REVERSE IDLER GEAR THRUST	7145												
	ARC8DR 7145 A			22	22	22		22	22				
WASHER – REVERSE IDLER GEAR THRUST	7149												
	ARC8DR 7149 A			C	D	E		G	H				
PLATE – C/SHAFT & REVERSE IDLER SHAFT LOCK	7155												
	ARC8DR 7155 A	A	B	C	D	E	F	G	H				
SPRING – TRANSMISSION KICKDOWN (REFER SECTION 95)	7B176												
SPRING – SYNCHRONIZER	7D176												
Front	ARC6DR 7D176 B		B	C	D	E	F	G	H				
Rear	ARC6DR 7D176 A		B	C	D	E	F	G	H				
COVER – CASE ACCESS	7222												
	ARC6DR 7A035 A	A	B	C	D	E	F	G	H				
Bolt & washer – 5/16" – 18 x 5/8" – cover to case	372110 S	a/r	a/r	a/r	a/r	a/r	a/r	a/r	a/r				

DESCRIPTION	PART NUMBER	MANUAL TRANSMISSION PARTS LIST "A TO L"											
		A	B	C	D	E	F	G	H	I	J	K	L
GASKET – CASE ACCESS GEAR	7223												
	ARC6DR 7A036 A	A	B	C	D	E	F	G	H				
FORK – GEARSHIFT	7230												
Second & third	ARC6DR 7230 A	A	B	C	D	E	F	G	H				
FORK – GEARSHIFT	7231												
First & reverse	ARC6DR 7231 A	A											
First & reverse	ARC6DR 7231 B		B	C	D	E	F	G	H				
SLEEVE – INTERLOCK SHIFTER	7233												
	ARC6DR 7233 B	A	B	C	D	E	F	G	H				
	C0DR 7233 C	A	B	C	D	E	F	G	H				
	C0DR 7233 A	A	B	C	D	E	F	G	H				
SPRING – SHIFTER INTERLOCK	7234												
	ARC6DR 7234 A	A	B	C	D	E	F	G	H				
Ball – interlocking spring 5/16"	353071 S	A	B	C	D	E	F	G	H				
PIN – SHIFTER INTERLOCK	7235												
	ARC6DR 7235 A	A	B	C	D	E	F	G	H				
Ball – interlocking – 0.312" (5/16") dia.	353081 S	2	2	2	2	2	2	2	2				
CAM & SHAFT ASSY. – HIGH & INTERMEDIATE GEARSHIFT	7280												
	XT 7280 B	A	B	C	D	E	F	G	H				
Pin gear change shaft retaining – 5/32" x 1½" taper	73775 S	2	2	2	2	2	2	2	2				
CAM & SHAFT ASSY. – LOW & REVERSE GEARSHIFT	7282												
	XT 7282 C	A											
	XT 7282 A		B	C	D	E	F	G	H				
SEAL ASSY. – INPUT SHAFT OIL	7A283												
	ARC6DR 7A283 A	A	B				F						
	B7AZ 7A283 B			C	D	E		G	H				
LEVER – GEAR SHIFT	7285/90												
First & reverse	XA 7290 B	A											
First & reverse	XA 7290 C		B	C		E			H				
First & reverse	XA 7290 D						F	G					
First & reverse	XT 7290 C				D								
Second & third	XT 7285 B	A	B	C	D	E	F	G	H				
Lockwasher – lever to shaft – 3/8"	34807 S8		2		2								
Nut 5/16" – 24 lock rods 7326, 7328, to selector arm	55737 S2	2	2	2	2	2	2	2	2				
Washer – shakeproof – 0.375" lever to finger assy	34807 S8	a/r	a/r	a/r	a/r	a/r	a/r	a/r	a/r				
Nut camshaft – .375" – 24 lever to finger assy.	33800 S78	a/r	a/r	a/r	a/r	a/r	a/r	a/r	a/r				
SEAL ASSY. – SHIFTER SHAFT OIL	7288												
	XT 7288 A	2	2	2	2	2	2	2	2				
LEVER – GEARSHIFT (REFER 7285)	7290												
GEAR – SPEEDO DRIVE	17285												
7 tooth – green – to 9/72	XA 17285 B	A	B	C	D								
7 tooth – blue – from 9/72	XA 17285 D	A	B	C	D								
8 tooth – yellow	XA 17285 C	A	B	C	D		F	G	H				
6 tooth – no colour	ARC6DZ 17285 B					E							
Clip speedo gear retainer	XA 7064 A	A	B	C	D		F	G					
Snap ring speedo gear retaining	ARC6DZ 7059 A					E							

DESCRIPTION	PART NUMBER	MANUAL TRANSMISSION PARTS LIST "M TO X"											
		M	N	O	P	Q	R	S	T	U	V	W	X
KIT – GASKET TRANSMISSION	7153												
	C4AZ 7153 B	M	N	O									
	XB 7153 A				P	Q	R						
KIT – SMALL PARTS REPAIR	7A331/7B331												
	C4MY 7B331 B	M	N	O									
CASE ASSY. – TRANSMISSION	7005/6												
	D20Z 7005 H	M	N	O									
	XB 7005 A				P	Q	R						
Plug ½" filler	87732 S	M	N	O	P	Q	R						
Plug 13/16" welch	74114 S				P	Q	R						
Plug magnetic drain	373719 S	M	N	O	P	Q	R						
Plug 11/16" expansion to seal, shift rail idle in case													
	74112 S	M	N	O									
Lockwasher 7/16" – case, to flywheel housing	34808 S78	4											
OIL SEAL – OUTPUT SHAFT	7A011												
	B9AP 7A011 A	M											
Snap ring – 1" I.D. oil seal retaining	372401 S	M											
SHAFT – INPUT	7017												
	C4DZ 7017 A	M	N	O									
	XB 7017 A				P	Q							
	XB 7017 B						R						
BEARING – MAIN DRIVE GEAR	7025												
Input	8D 7025 A	M	N	O									
Output	8D 7065 A	M	N	O									
Input	XB 7025 A				P	Q	R						
Output	XB 7065 B				P								
Output	XB 7065 A					Q	R						
RING – SNAP (REFER 7064)	7026												
GEAR – LOW SPEED CONSTANT MESH	7A029												
	C4AZ 7A029 D	M	N	O									
	XB 7A029 A				P	Q							
	XB 7A029 B						R						
Snap Ring - gear to shaft	379233 S	M	N	O									
SCREW – GEAR SHIFT DETENT	7032												
	XB 7032 A				P	Q	R						
VENT ASSY.	7034												
	XA 7034 A				P	Q	R						
BUSHING – EXTENSION HOUSING	7A034												
	XA 7A034 A				P	Q	R						
	B3TZ 7A034 A	M	N										
	C6AZ 7A034 A			O									
COVER – CASE ACCESS (REFER GROUP 7222)													
	7A035												
GASKET – CASE ACCESS COVER (REFER GROUP 7223)													
	7A036												
EXTENSION ASSY. – TRANSMISSION	7A039												
	C60Z 7A039 C	M											
	C90Z 7A039 A		N	O									
O.R.C. – (1) XB 7A039 B													
(1) XB 7065 A	XB 7A039 A				P		R						
	XB 7A039 B					Q							
Bolt 7/16" – 14 x 1¼" housing to case	20430 ES2B				6	6	6						
	34808 S78	a/r	a/r	a/r	a/r	a/r	a/r						

DESCRIPTION	PART NUMBER	MANUAL TRANSMISSION PARTS LIST "M TO X"											
		M	N	O	P	Q	R	S	T	U	V	W	X
BAFFLE – MAIN GEAR BEARING OIL	7040												
	XB 7040 A				P	Q	R						
INSERT – SYNCHRONIZER CLUTCH HUB	7A044												
First/second, third/fourth	XW 7116 A				6	6	6						
First & second	C4AZ 7A044 A	3	3	3									
Third & fourth	C3AZ 7A044 A	3	3	3									
RETAINER – INPUT SHAFT BEARING	7050												
	C5AZ 7050 J	M	N	O									
	XB 7050 A				P	Q	R						
Bolt 5/16" – 18 x ¾" – retainer to case	350673 S	4	4	4									
BOLT – INPUT SHAFT BEARING RETAINER	7B050												
	XB 7B050 A				4	4	4						
GASKET – INPUT SHAFT BEARING	7051												
	C4AZ 7051 A	M	N	O									
	XB 7051 A				P	Q	R						
OIL SEAL – EXTENSION HOUSING	7052												
	C4TZ 7052 A	M											
	B5AZ 7052 A		N	O									
	XB 7052 A				P	Q	R						
SHAFT – OUTPUT (ALSO REFER 7A061)	7061												
	C5ZZ 7061 C	M											
	C8AZ 7061 A		N	O									
	XB 7061 A				P	Q	R						
Ball ¼" diam. – attach. speedo gear to shaft	353076 S	M											
RING – SNAP (ALSO REFER 7059 & 17285)	7064												
Input shaft – bearing to shaft	ARC6DR 7064 A				P	Q	R						
Output shaft – bearing to shaft	ARC6DR 7064 A				P	Q	R						
Input shaft – bearing to shaft	ARC6DR 7064 B				P	Q	R						
Output shaft – bearing to shaft	ARC6DR 7064 B				P	Q	R						
Input shaft – bearing to shaft	ARC6DR 7064 C				P	Q	R						
Output shaft – bearing to shaft	ARC6DR 7064 C				P	Q	R						
Input shaft – bearing to shaft	ARC6DR 7064 D				P	Q	R						
Output shaft – bearing to shaft	ARC6DR 7064 D				P	Q	R						
Input shaft – bearing to case	ARC6DR 7026 A				P	Q	R						
Input shaft – bearing to case	C4AZ 7026 A	M	N	O									
Input shaft – bearing to shaft	C4AZ 7064 A	M	N	O									
Output shaft – bearing to case	51A 7026 A	M	N	O									
Output shaft – bearing to shaft	8A 7064	M	N	O									
Third & fourth synchro to shaft	8A 7064	M	N	O									
Speedo gear to shaft	8A 7064	M	N	O									
First & second synchro to shaft	C4AZ 7064 B	M	N	O									
Third & fourth synchro retaining	ARC6DR 7064 A				P	Q	R						
Output shaft bearing to case	XB 7026 A				P	Q	R						
Speedo gear to shaft	XA 7064 A				P	Q	R						
Input shaft – bearing to case	XB 7026 A				P	Q	R						
First & second synchro retaining – .087"-.085"	XB 7064 A				a/r	a/r	a/r						
First & second synchro retaining – .090" -.088"	XB 7064 B				a/r	a/r	a/r						
First & second synchro retaining – .093"-.091"	XB 7064 C				a/r	a/r	a/r						
First & second synchro retaining – .096"-.094"	XB 7064 D				a/r	a/r	a/r						
BEARING – OUTPUT SHAFT (REFER 7025)	7065												
WASHER – TAB M/DRIVE M/SHAFT	7071												
	XT 7071 B				2	2	2						
	C3AZ 7061 D	M	N	O									

DESCRIPTION	PART NUMBER	MANUAL TRANSMISSION PARTS LIST "M TO X"											
		M	N	O	P	Q	R	S	T	U	V	W	X
GASKET – EXTENSION HOUSING	**7086**												
	C4AZ 7086 B	M	N	O									
	XB 7086 A				P	Q	R						
GEAR TRANS. LOW & REVERSE (NOT SERVICED)	**7100**												
GEAR ASSY. – SECOND SPEED	**7102**												
	C4DZ 7102 A	M	N	O									
	XB 7102 A				P	Q	R						
Snap ring gear to output shaft	379233 S36	M	N	O									
RING – SYNCHRONIZER BLOCKING	**7107**												
	C4AZ 7107 D	4	4	4									
	XR 7107 A				4	4	4						
SPRING – SYNCHRONIZER RETAINER	**7109**												
First & second	XB 7109 A				2	2	2						
Third & fourth	XY 7109 A				2	2	2						
	C3AZ 7109 D	4	4	4									
COUNTERSHAFT	**7111**												
	C4AZ 7111 A	M	N	O									
	XB 7111 A				P	Q	R						
Pin - retain shaft to case (not serviced)	305080 S	M	N	O									
GEAR – COUNTERSHAFT	**7113**												
	C4DZ 7113 B	M	N	O									
	XB 7113 A				P	Q							
	XB 7113 B						R						
PLATE – SYNCHRONIZER SHIFTER PLATE (REFER GROUP 7A044)	**7116**												
ROLLER – INPUT SHAFT PILOT BEARING	**7118**												
	C3AZ 7118 A	15	15	15									
WASHER – C/SHAFT GEAR THRUST	**7119**												
	C4AZ 7119 A	2	2	2									
Front	XB 7119 A				P	Q	R						
Rear inner	XB 7119 B				P	Q	R						
Rear outer	XB 7119 C				P	Q	R						
ROLLER – INPUT SHAFT PILOT BEARING	**7120**												
	ARC6DR 7120 A				15	15	15						
Dowel inspection cover	ARC6DR 7120 A				2	2	2						
ROLLER – COUNTERSHAFT BEARING	**7121**												
	ARC6DR 7121 A				96	96	96						
	C4AZ 7121 A	42	42	42									
Use with rev. idler gear (7141)	C0DR 7121 A	44	44	44									
Washer – flat, retain rollers in gear (7113)	378559	2	2	2									
Washer – retain rollers in gear (7141)	351529	2	2	2									
SYNCHRONIZER ASSY.	**7124**												
Third & fourth	ARC6DR 7124 A				P	Q	R						
First & second	D0AZ 7124 B	M	N	O									
Third & fourth	D0AZ 7124 A	M	N	O									
First & second	XB 7124 A				P	Q	R						
FINGER ASSY. – SHIFT CONTROL	**7C124**												
First, second, third & fourth	C3AZ 7C124 A	2	2	2									
Reverse	C4AZ 7C124 A	M	N	O									

DESCRIPTION	PART NUMBER	MANUAL TRANSMISSION PARTS LIST "M TO X"											
		M	N	O	P	Q	R	S	T	U	V	W	X
WASHER – COUNTERSHAFT ROLLER THRUST	7125												
0.093" thick	XB 7125 A				4	4	4						
0.223" thick	XB 7125 B				2	2	2						
SHAFT – REVERSE IDLER GEAR	7140												
	C4AZ 7140 A	M	N	O									
	XB 7140 A				P	Q	R						
Pin – retain shaft in case (not serviced)	305080 S	M	N	O									
GEAR & BUSHING ASSY. – REVERSE IDLER	7141												
	C4AZ 7141 A	M	N	O									
	XB 7141 A				P	Q	R						
WASHER – REVERSE IDLER GEAR THRUST	7149												
	C4AZ 7149 A	2	2	2									
PLATE – C/SHAFT & REVERSE IDLER SHAFT LOCK	7155												
	XB 7155 A				P	Q	R						
SPRING – TRANSMISSION KICKDOWN (REFER SECTION 95)	7B176												
PIVOT – REVERSE GEAR SHIFT LEVER	7K179												
	XB 7K179 A				P	Q	R						
Nut pivot to case	33800 S78				P	Q	R						
Lockwasher pivot to case	34807 S78				P	Q	R						
HOUSING – GEAR SHIFT LEVER	7203												
	XB 7203 A				P	Q	R						
Lockwasher – housing retaining	34808 S78				3	3	3						
Bolt – housing retaining	20430 ES2B				3	3	3						
SEAL – GEAR SHIFT HOUSING SHAFT	7A203												
	XB 7A203 A				P	Q	R						
COVER – CASE ACCESS	7222												
	C4AZ 7222 A	M	N	O									
	XB 7222 A				P	Q	R						
Bolt 5/16" – 18 x 1.0" – cover to case	20386 S36	2	2	2									
Bolt & washer 5/16" – 18 x 5/8" – cover to case	372110 S	a/r	a/r	a/r	a/r	a/r	a/r						
GASKET – CASE ACCESS GEAR	7223												
	C4AZ 7223 B	M	N	O									
	XB 7223 A				P	Q	R						
GEAR – REVERSE IDLER SLIDING	7D223												
	C4AZ 7D223 B	M	N	O									
FORK – GEARSHIFT	7230												
First & second	C4AZ 7230 B	M	N	O									
Third & fourth	C4AZ 7230 A	M	N	O									
First & second	XB 7230 B				P	Q	R						
Third & fourth	XB 7230 A				P	Q	R						
Screw – fork to rail	377886 S	a/r	a/r	a/r									

DESCRIPTION	PART NUMBER	MANUAL TRANSMISSION PARTS LIST "M TO X"											
		M	N	O	P	Q	R	S	T	U	V	W	X
FORK – GEAR SHIFT	**7231**												
Reverse	C4AZ 7231 B	M	N	O									
GATE – REVERSE GEAR SHIFT SHAFT	**7232**												
	XB 7232 A				P	Q	R						
SPRING – SHIFTER INTERLOCK	**7234**												
	C7AZ 7234 A	3		3									
	C8AZ 7234 A		N										
	XB 7234 A				P	Q	R						
Screw headless – retaining spring (not serviced)	377885 S	M	N	O									
PIN – SHIFTER INTERLOCK	**7235**												
	D0AZ 7235 B	2	2	2									
	XB 7235 A				P	Q	R						
RAIL – GEAR SHIFT	**7240/1**												
First & second	D20Z 7240 A	M		O									
First & second	D0AZ 7240 F		N										
Third & fourth	D2AZ 7241 B	M	N	O									
Reverse	D0AZ 7240 K	M	N	O									
Kit – rails & pins	D0AZ 7240 J		N										
Front	XB 7240 A				P	Q	R						
Rear	XB 7358 A				P	Q	R						
PIN – GEAR SHIFT RETAINING	**7A240**												
Front	XB 7A240 A				P	Q	R						
Rear	XB 7A240 B				P	Q	R						
LEVER ASSY. – REVERSE GEAR SHIFT	**7243**												
	XB 7243 A				P	Q	R						
SEAL ASSY. – INPUT SHAFT OIL	**7A283**												
	B7AZ 7A283 B	M	N	O	P	Q	R						
LEVER – GEAR SHIFT	**7285/90**												
First & second	XA 7290 A	M	N	O									
Third & fourth	D00Z 7285 A	M	N	O									
Reverse	XW 7290 A	M	N	O									
Nut 5/16" – 24 –lock rods, 7326, 7328 to selector arm	55737 S2	2	2	2	2	2	2						
Washer – shake proof – 0.375" lever to finger assy.	34807 S8	a/r	a/r	a/r									
Nut camshaft – .375" – 24 – lever to finger assy.	33800 S78	a/r	a/r	a/r									
SEAL ASSY. – SHIFTER SHAFT OIL	**7288**												
	1A 7288 A	3	3	3									
	XB 7288 A				P	Q	R						
LEVER – GEAR SHIFT (REFER 7285)	**7290**												
PIN – GEAR SHIFT INTERLOCK ROD	**7C316**												
	D0AZ 7C316 A	5	5	5									
GEAR – THIRD SPEEDO	**7B340**												
	C4DZ 7B340 B	M	N	O									
	XB 7B340 A				P	Q	R						
PLUG – GEAR SHIFT HOUSING	**7K381**												
	XB 113024 A				P	Q	R						
WASHER – OUTPUT SHAFT	**7A385**												
	C4AZ 7A385 A	M	N	O									

DESCRIPTION	PART NUMBER	MANUAL TRANSMISSION PARTS LIST "M TO X"											
		M	N	O	P	Q	R	S	T	U	V	W	X
SEAL – SENSOR SWITCH	77868												
	IP 77868 A	M											
GEAR – SPEEDO DRIVE	17285												
8 tooth – yellow	XA 17285 C				P	Q	R						
7 tooth – black	C4DZ 17285 A		N	O									
Clip speedo gear retainer	XA 7064 A				P		R						

MODEL	BODY TYPE	REMARKS	UNIT	PART NUMBER		
– – 7007 – – PLATE – ENGINE REAR COVER						
XA/B, ZF/G	All	6 cyl.	1	XY	7B007	A
XA/B, ZF/G	All	8 cyl.	1	D0AZ	7007	A
XA/B, ZF/G	All	8 cyl. – bolt – 5/16" – 18 x 1¾" plate to bell housing	2	20346 S78		
XA/B, ZF/G	All	8 cyl. – washer – plate to bell housing	2	34806 S36		
– – 7B007 – – PLATE – ENGINE REAR COVER (REFER 7007)						
– – 7C102 – – SEAL – TRANSMISSION CONTROL SELECTOR TUBE						
XB,ZG	All	Column shift	1	C7ZZ	7C102	A
XB, ZG	All	Floor shift	1	XB	7C102	A
– – 7B112 – – ROD – REVERSE GEAR SHIFT						
XA/B	All	Floor shift – Ford	1	XA	7B112	A
XA/B	All	Floor shift – Nut 5/16" – 24 – rod to lever	1	55737 S2		
– – 7B125 – – TRUNNION – TRANS. GEAR SHIFT LEVER						
XA/B	All	Floor shift – Ford	1	XA	7B125	A
XA/B	All	Floor shift – circlip – not serviced	2	95727 S		
– – 7200 – – COLUMN ASSY. – STEERING – COLUMN SHIFT (REFER ALSO 3C529)						
XA, ZF	All		1	XA	7200	FP
XB, ZG	All		1	XB	7200	A
XB, ZG	All	Screw – 8" – 32 x ¼"	3	50514 S8		
– – 7202 – – LEVER ASSY. – GEAR SHIFT (REFER 7210)						
– – 7210 – – LEVER ASSY. – GEAR SHIFT						
XA/B, ZF/G	All	Column shift	1	XA	7210	B
XA/B	All	Floor shift – Ford	1	XA	7202	AA
XB, ZG	All	Floor shift – Borg Warner	1	XB	7210	A
XA/B	All	Bolt – 5/16" – 18 special shoulder – lever assy. to control assy. – floor shift	2	379818 S78		
– – 7210 – – LEVER – GEAR SHIFT LEVER MOUNTING – LOWER						
XA/B	All	Floor shift – Ford	1	XA	7210	AA
– – 7A210 – – SNAP RING – GEAR SHIFT LEVER						
XB	All	Floor shift – Borg Warner	1	XB	7A210	A
– – 7212 – – TUBE ASSY. – GEAR SHIFT						
XA, ZF	All	Without power steering	1	XA	7212	A
XA, ZF	All	With power steering	1	XA	7212	C
XB, ZG	All		1	XB	7212	A
– – 7213 – – KNOB ASSY. – TRANS. GEAR SHIFT LEVER						
XA/B	All	Floor shift – Ford	1	XT	7213	A
XA/B, ZF/G	All	Column shift	1	XA	7213	B
XB, ZG	All	Floor shift – Borg Warner	1	CH	7213	AA
– – 7E218 – – DETENT – GEAR SHIFT CONTROL LEVER						
XA/B	All	Floor shift – Ford	1	XA	7E218	AA
– – 7227 – – SPRING – GEAR SHIFT LEVER DETENT						
XA/B	All	Floor shift – Ford	1	XA	7227	A
– – 7228 – – SOCKET – TRANS. GEAR SHIFT LEVER						
XA, ZF	All	Column shift	1	C8AZ	7228	A
XB, ZG	All	Column shift	1	XB	7228	A
– – 7C228 – – SPRING – TRANS. GEAR SHIFT ANTI-VIBRATOR						
XA/B, ZF/G	All	Column shift	1	C20A	7C228	A
– – 7B233 – – PLATE – GEAR SHIFT LEVER OPENING						
XA/B	All	Floor shift – Ford	1	XA	7B233	AA
XB	All	Floor shift – Borg Warner	1	XB	7B233	A
– – 7241 – – SHAFT – GEAR SHIFT LEVER SUPPORT						
XA/B	All	Floor shift – Ford	1	XA	7241	AA
– – 7246 – – INSULATOR – GEAR SHIFT ANTI-RATTLE						
XA/B, ZF/G	All	Column shift	1	D2DZ	7246	A
XA/B, ZF/G	All	Column shift	1	B8S	7246	A

MODEL	BODY TYPE	REMARKS	UNIT	PART NUMBER		
– – 7262 – – RETAINER – GEAR SHIFT LEVER BOOT						
XA/B	All	Floor shift – Ford	1	XT	7262	A
XB	All	Floor shift – Borg Warner	1	XB	7262	A
– – 7A271 – – BOOT ASSY. – GEAR SHIFT LEVER						
XA/B	All	Floor shift – Ford – with console	1	XA	7A271	AA
XB	All	Floor shift – Borg Warner	1	XB	7A271	A
– – 7277 – – BOOT – GEAR SHIFT LEVER						
XA/B	All	Floor shift – Ford – without console	1	XW	7277	A
XB	All	Floor shift – Borg Warner	1	XB	7277	A
– – 7A290 – – SUPPORT ASSY. – GEAR SHIFT LEVER INNER						
XA/B	All	Floor shift – Ford	1	XA	7A290	AA
– – 7302 – – ARM ASSY. – GEAR SHIFT						
XA/B, ZF/G	All	Column shift – inter & high	1	XW	7302	D
– – 7303 – – ARM ASSY. – GEAR SHIFT						
XA/B, ZF/G	All	Column shift – low & reverse	1	XA	7303	AA
– – 7C305 – – EXTENSION – GEAR SHIFT LEVER						
XA/B	All	Floor shift – Ford	1	XA	7C305	AA
– – 7C312 – – LEVER – GEAR SHIFT						
XA/B	All	Floor shift – Ford – 3rd & 4th, reverse	2	XA	7C312	AA
– – 7315 – – LEVER – 1ST & 2ND GEAR SHIFT						
XA/B	All	Floor shift – Ford	1	XA	7315	AA
– – 7326 – – ROD – GEAR SELECTOR						
XA/B, ZF/G	All	6 cyl. – col. shift – intermediate & high	1	XA	7326	EA
XA/B, ZF/G	All	302 c.i.d. – column shift – intermediate & high	1	XA	7326	FA
XA/B	All	Floor shift – Ford – 3rd & 4th	1	XA	7326	AA
XA/B, ZF/G	All	Washer – spring – att. rod to trans.	1	351341 S7		
– – 7328 – – ROD – GEAR SELECTOR						
XA/B, ZF/G	All	6 cyl. – column shift – low & reverse	1	XA	7328	AA
XA/B, ZF/G	All	302 c.i.d. – column shift – low & reverse	1	XA	7328	BA
XA/B	All	Floor shift – Ford – 1st & 2nd	1	XA	7328	A
– – 7335 – – BUSHING – GEAR SHIFT TUBE – COLUMN SHIFT						
XA/B, ZF/G	All	Upper	1	C8AZ	7335	A
XA/B, ZF/G	All	Intermediate	1	C4AZ	7335	B
XA/B, ZF/G	All	Lower	1	C4AZ	7335	C
– – 7341 – – INSULATOR – GEAR SHIFT						
XA/B, ZF/G	All	5/16" I.D. – 11/32" long	1	C7SZ	7341	A
XA/B, ZF/G	All	3/8" I.D. – 11/16" long – to 12/74	1	D40Z	7341	A
XB, ZG	All	3/8" I.D. – 11/16" long – from 12/74	1	D5AZ	7341	C*
– – 7343 – – BUSHING – GEAR SHIFT ARM INSULATOR						
XA/B, ZF/G	All	3 piece type	1	C1AZ	7343	A
XA/B, ZF/G	All	2 piece type	1	C3TZ	7343	A
– – 7347 – – BEARING – STEERING COLUMN TUBE						
XA/B, ZF/G	All		1	C8AZ	7347	B
– – 7347 – – BEARING – GEAR SHIFT TUBE						
XA/B, ZF/G	All	Column shift	1	XY	7347	A
XA/B, ZF/G	All	Floor shift	1	XA	7347	A
– – 7348 – – RETAINER – GEAR SHIFT COVER SHAFT						
XA/B	All	Floor shift – Ford	1	XA	7348	AA
– – 7353 – – SLEEVE – GEAR SHIFT CONNECTING ROD ADJUSTING						
XA/B, ZF/G	All	Column shift	2	C1AA	7353	C
XA/B	All	Floor shift – Ford	3	C2AZ	7353	A
XA, ZF	All	Washer – spring – att. sleeve to hsg. assy.	1	351341 S7		
XB, ZG	All	Pin – sleeve to arm	2	352358 S7		
XB, ZG	All	Washer – flat 3/8" – insulator to sleeve	4	44727 S2		

MODEL	BODY TYPE	REMARKS	UNIT	PART NUMBER		
– – 7358 – – RAIL – GEAR SHIFT – REAR (REFER 7240)						
– – 7400 – – CONTROL ASSY. – GEAR SHIFT						
XA/B	All	Floor shift – Ford	1	XA	7400	AA
XA/B	All	Bolt – special shouldered – 5/16" – 18 – att. 7400 assy. to trans.	3	V 388188 S2		
XA/B	All	Grommet	3	V 388187 S		
– – 7416 – – SUPPORT – GEAR SHIFT LEVER OUTER						
XA/B	All	Floor shift – Ford	1	XA	7416	AA
– – 7E425 – – CLIP – GEAR SHIFT ANTI-RATTLE						
XA/B, ZF/G	All	Column shift	1	XB	7E425	AB*
– – 7D439 – – PIN – SHIFT LEVER PIVOT						
XA/B, ZF/G	All	Column shift	1	C8AZ	7D439	A
– – 7D443 – – BEZEL – CONTROL SELECTOR LEVER						
XA/B	All	Floor shift – Ford	1	XA	7D443	BA
XB	All	Floor shift – Borg Warner	1	XB	7D443	A
– – 7E449 – – SWITCH ASSY. – SEAT BELT WARNING SENSOR						
XA/B	All	Floor shift – Ford	1	D20Z	7E449	A

MODEL	BODY TYPE	REMARKS	UNIT	PART NUMBER

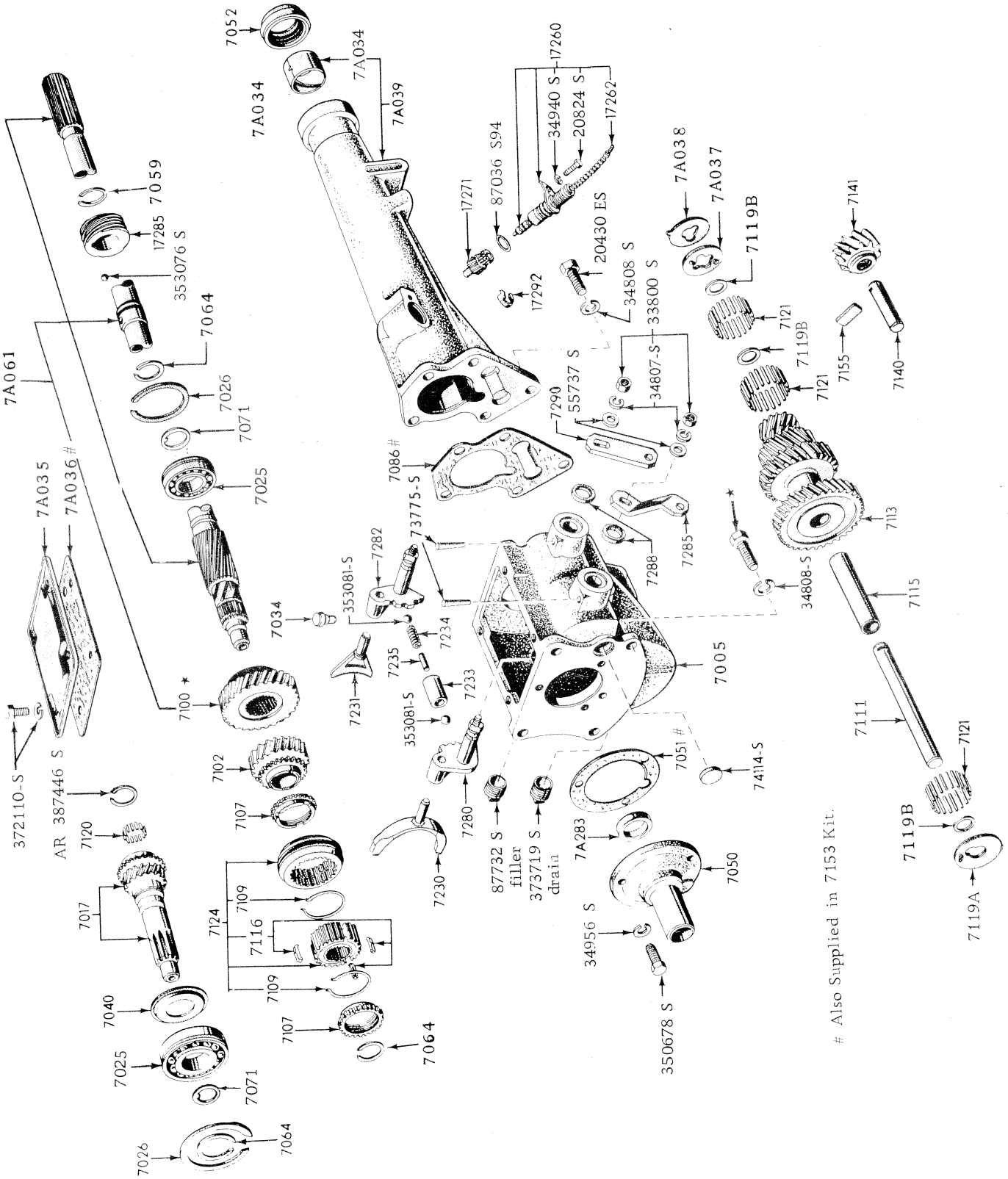

3 SPEED TRANSMISSION – PARTIAL SYNCHROMESH – FORD TYPE

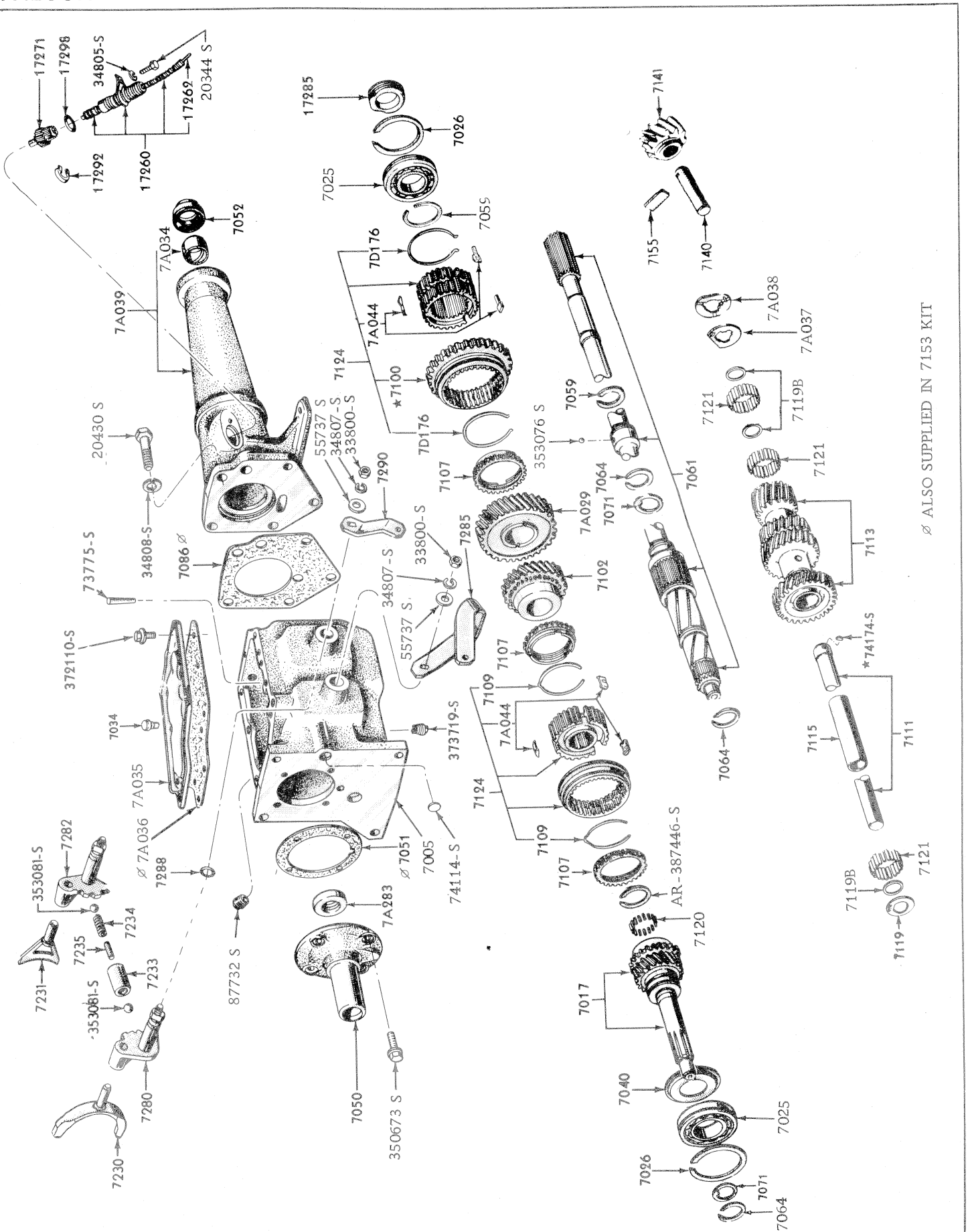

3 SPEED TRANSMISSION – FULL SYNCHROMESH – FORD TYPE

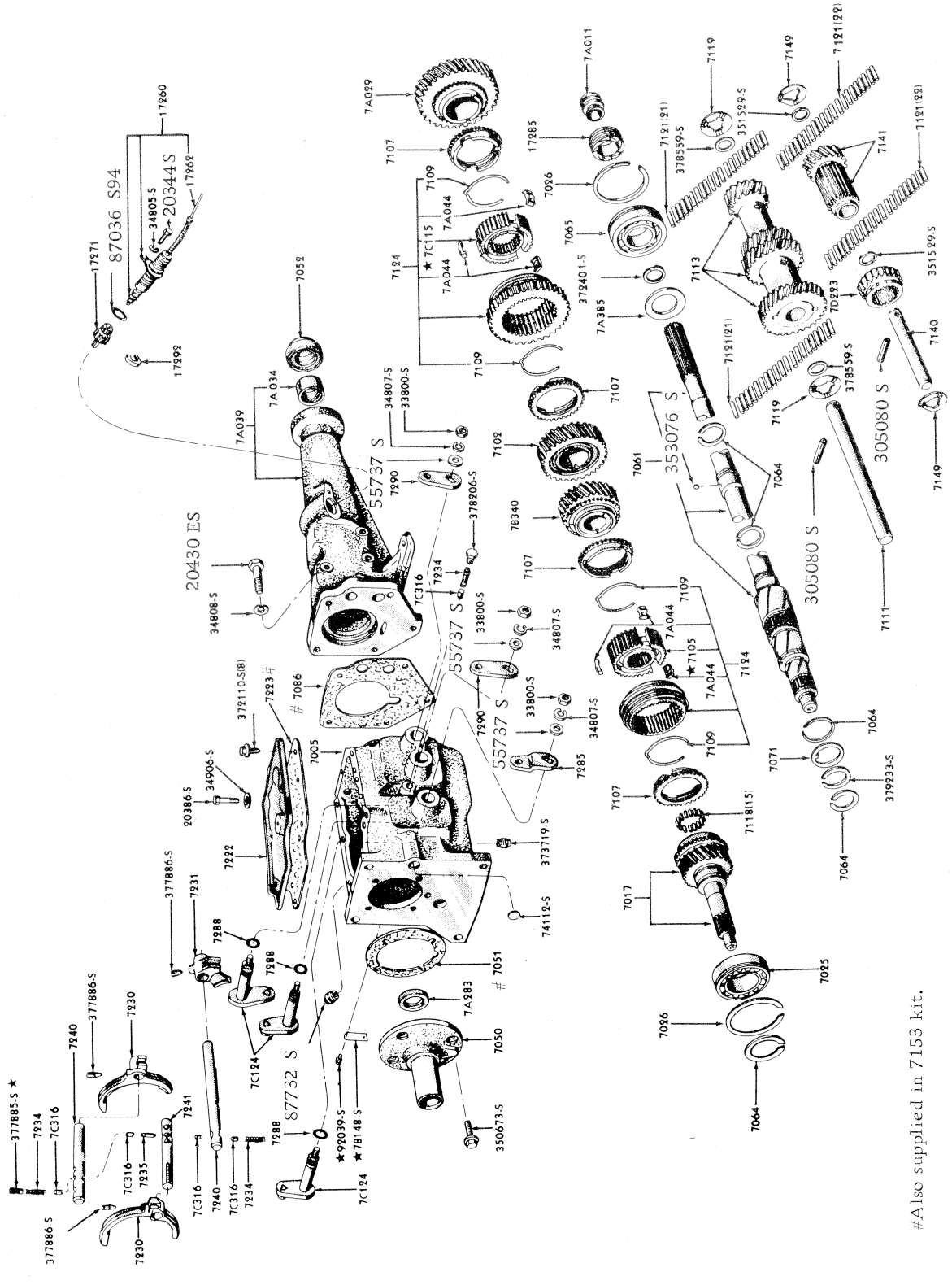

4 SPEED TRANSMISSION – FORD TYPE

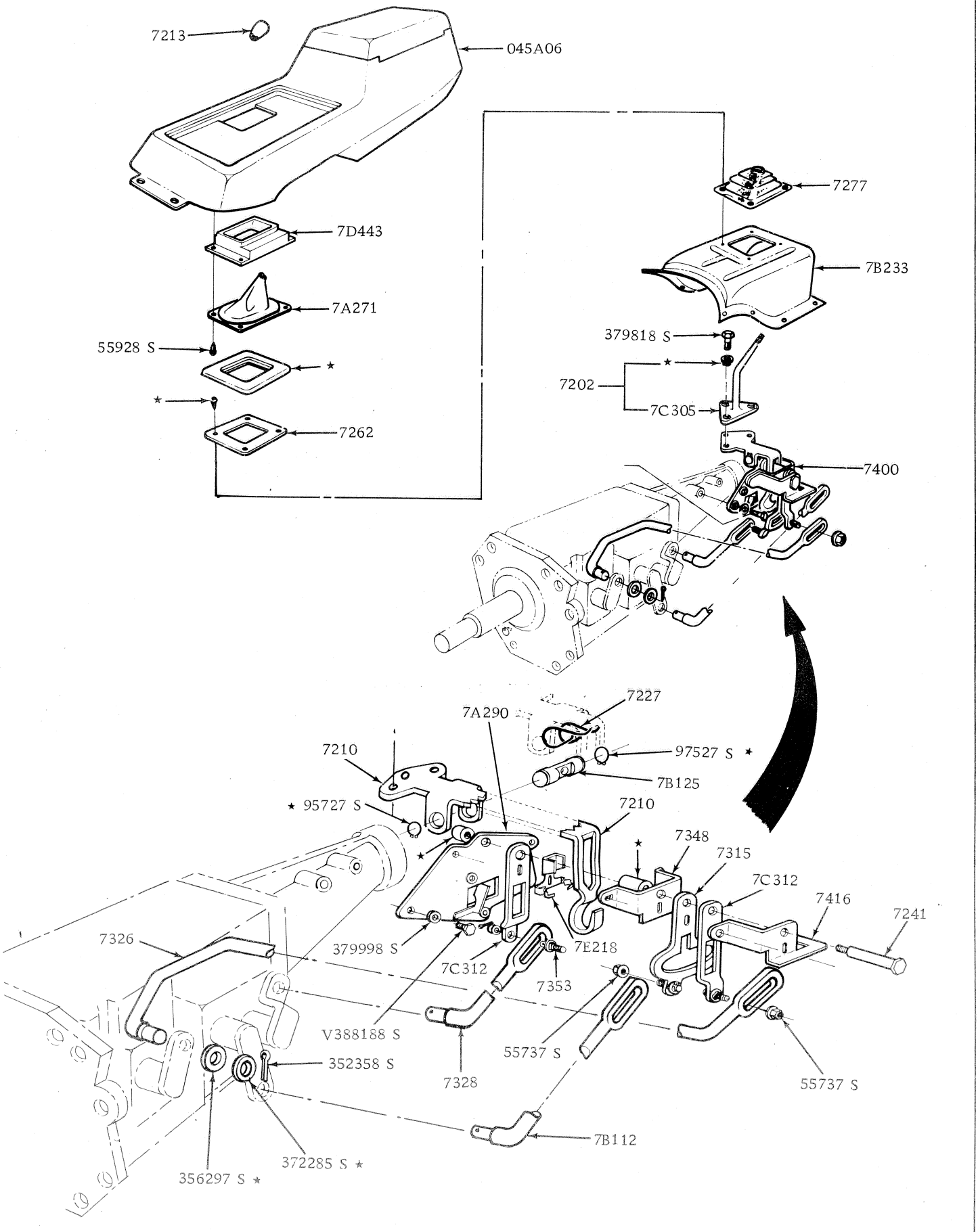

GEARSHIFT LINKAGE – WITH FORD 4 SPEED TRANSMISSION

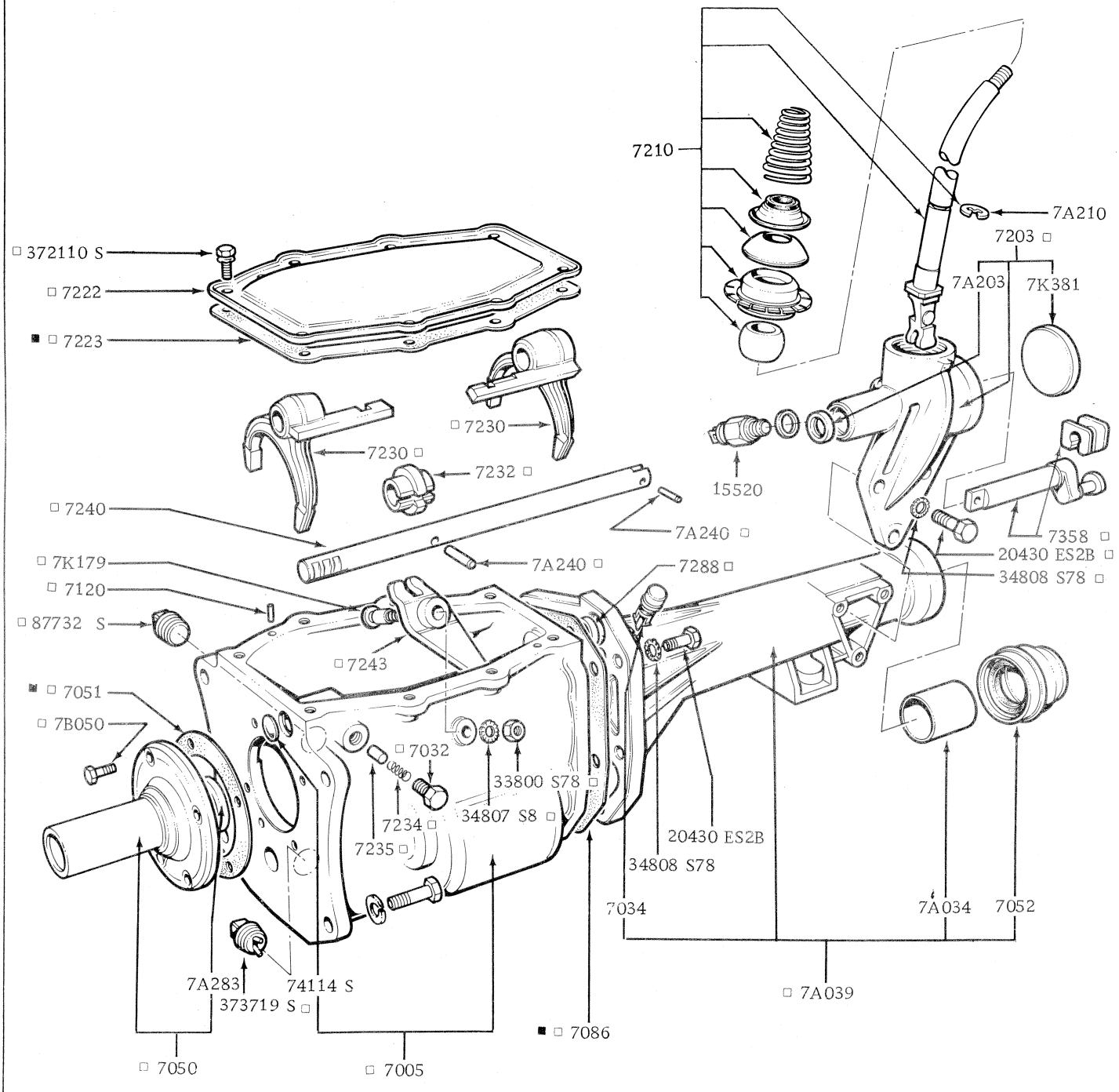

■ PART OF 7153 KIT
□ PART OF 7003 ASSY

4 SPEED TRANSMISSION – BORG WARNER TYPE

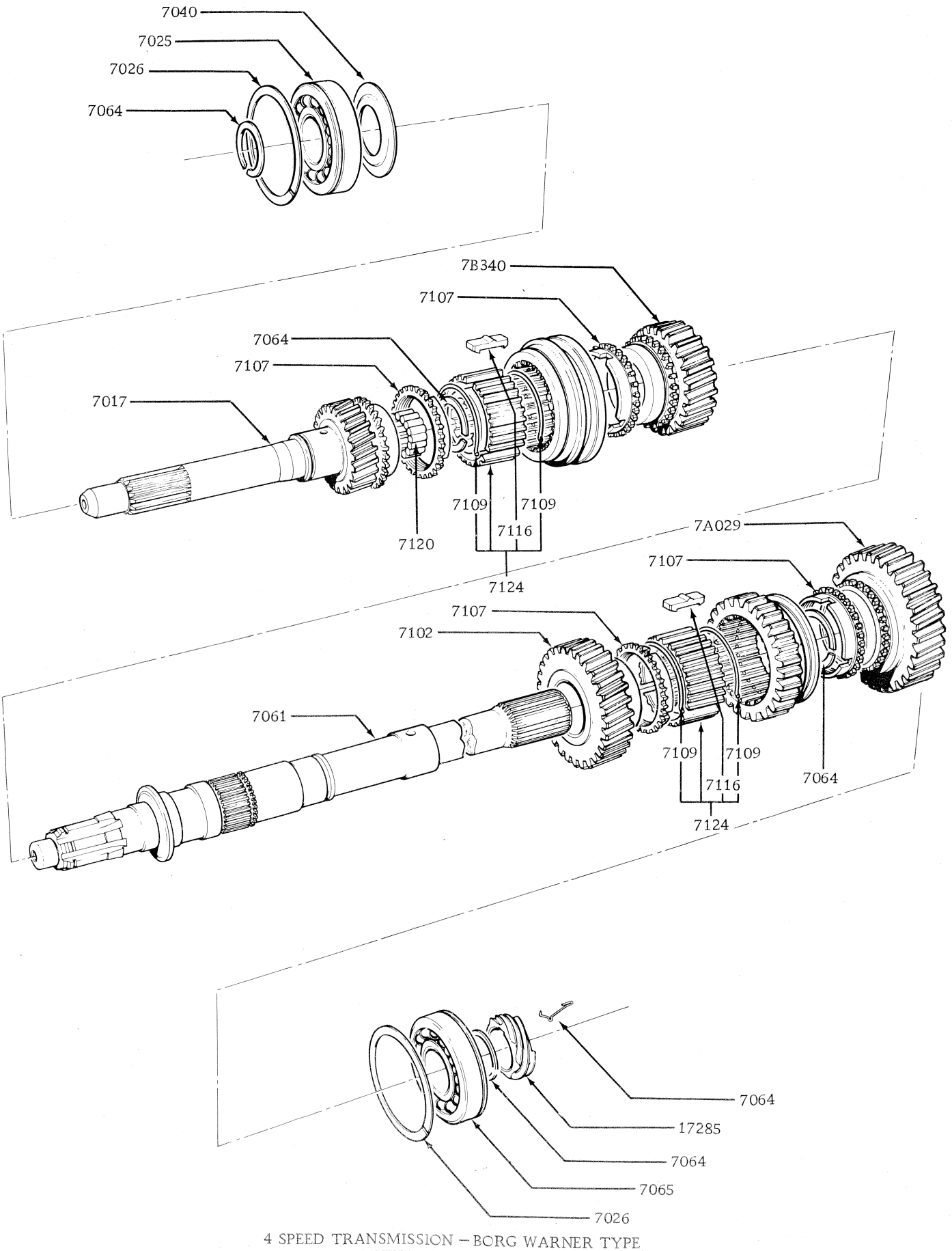

4 SPEED TRANSMISSION – BORG WARNER TYPE

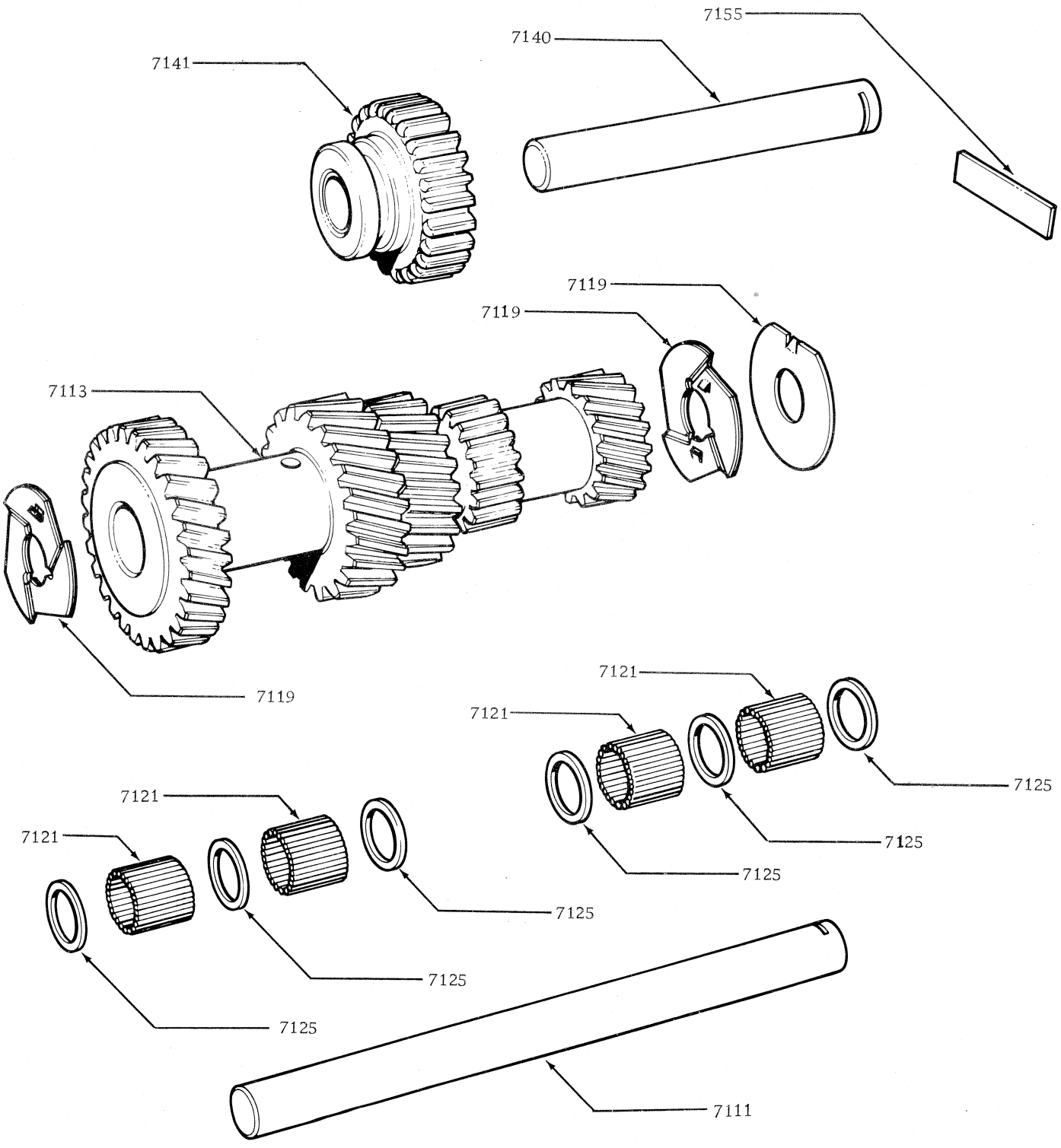

4 SPEED TRANSMISSION – BORG WARNER TYPE

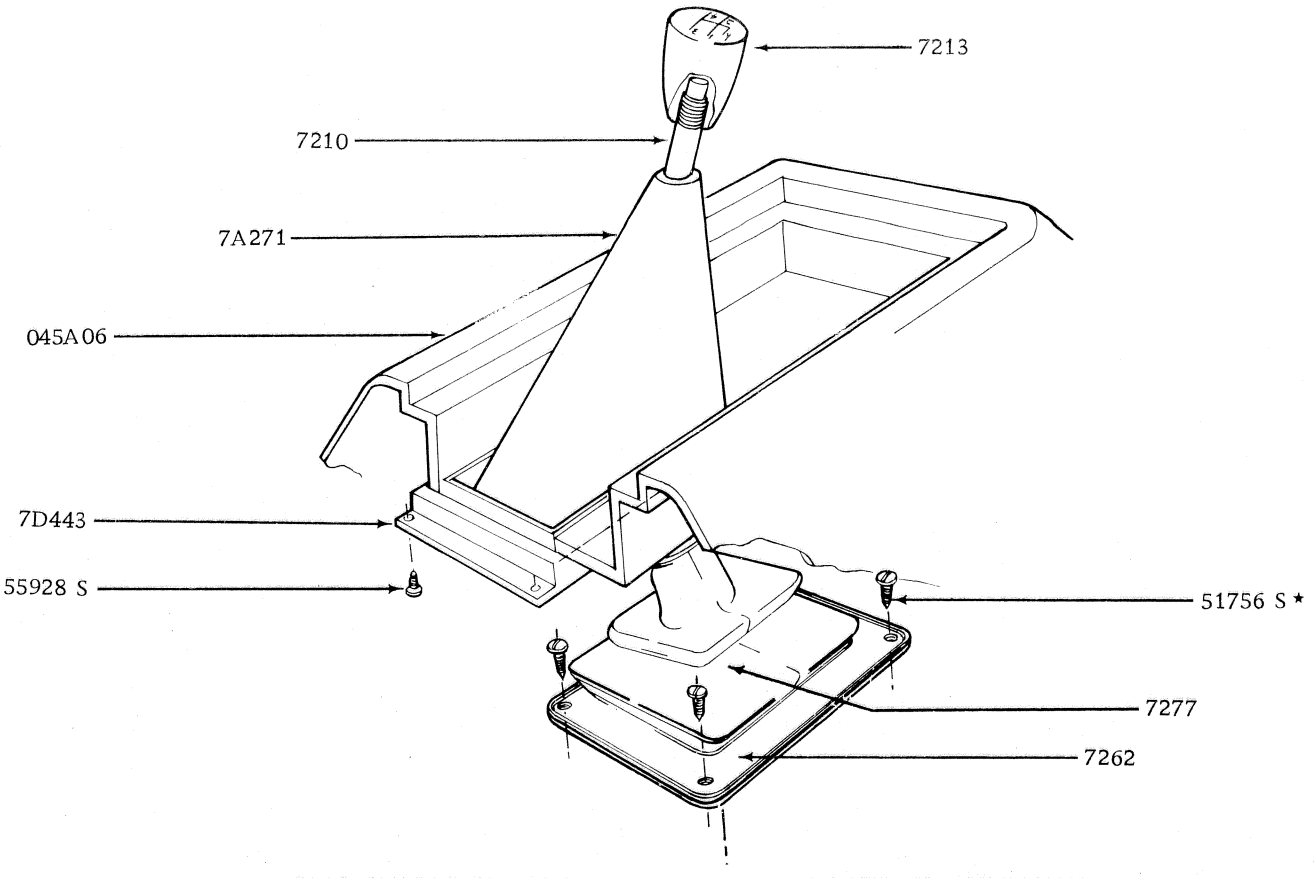

GEARSHIFT LEVER INSTALLATION – BORG WARNER TRANSMISSION

HOW TO IDENTIFY AUTOMATIC TRANSMISSION PARTS

1. Locate the identification tag or plate on the transmission case. If the transmission case is replaced, transfer the tag to the new case so that identification will not be lost.

2. Refer to the 'Automatic Transmission Application Chart' to find the parts list for the model.

   Example: A Falcon 500 Utility with 351 c.i.d. 2V engine, built since 1/74, having a Ford C4 transmission identified PEF-000-C uses parts list I.

   Turn to the parts list and select the component part desired.

   Gasket kit part numbers are shown at the beginning of the parts list. Immediately following the "Transmission Parts List", the Ford basic groups are continued.

AUTOMATIC TRANSMISSION APPLICATION CHART

MODEL/YEAR RANGE	BODY TYPE	ENGINE	TRANSMISSION TYPE	IDENTIFICATION	PART NUMBER	REPLACED BY	PARTS LIST
XA	All	200 c.i.d.	Borg Warner	ARD2DP/AA	XA 7000 A		M
XA, ZF	All	250 c.i.d. 1V	Borg Warner	ARD2DP/CA	XA 7000 C	XA 7000 DA	N
XA/B	All	200 c.i.d.	Borg Warner	72DA/CA	XA 7000 CB		O
XA/B, ZF/G	All	250 c.i.d. 1V	Borg Warner	72DA/DA	XA 7000 DA		P
XA/B, ZF/G	All	250 c.i.d. 1V	Ford – C4	PEE/AW/AW1 AM/AW5	XA 7000 N		A
XA, ZF	All	250 c.i.d. 2V	Ford – C4	PEE/AV/AV1/AV2/AL	XA 7000 M		B
XA, ZF – To 3/72	All	302 c.i.d.	Ford – C4	PEE-AY	XA 7000 E	XA 7000 BA	C
XA, ZF – From 3/72	All	302 c.i.d.	Ford – C4	PEF-J	XA 7000 BA		E
XB, ZG	All	302 c.i.d.	Ford – C4	PEF-J	XA 7000 BA		G
XB, ZG	All	302 c.i.d.	Ford – C4	PEF J2/J3	XB 7000 CA		H
XA, ZF	All	351 c.i.d. 2V	Ford – C4	PEF-C1	D1ZP 7000 JA	XA 7000 GC	F
XA/B, ZF/G – To 1/74	All	351 c.i.d. 2V	Ford – C4	ARD2ZP/GC	XA 7000 GC		D
XB, ZG – From 1/74	All	351 c.i.d. 2V	Ford – C4	PEF-00C/C6	XB 7000 GC		I
XA	54H, 65H	351 c.i.d. 4V	Ford – F.M.X.	PHB-000-S	D2FP 7003 EA	D3FP 7003 DA	U
XA	54H, 65H	351 c.i.d. 4V	Ford – F.M.X.	PHB-S	D00P 7003 U		V
XA/B	54H, 65H	351 c.i.d. 4V	Ford – F.M.X.	PHB-000-S/S5	XA 7000 FA		W

AUTOMATIC TRANSMISSION ASSEMBLIES

ENGINE	TRANSMISSION TYPE	IDENTIFICATION	PART NUMBER	REPLACED BY	PARTS LIST
250 c.i.d. 1V	Ford – C4	PEE/AW/AW1/AM/AW5	XA 7000 N		A
250 c.i.d. 2V	Ford – C4	PEE/AV/AV1/AV2/AL	XA 7000 M		B
302 c.i.d.	Ford – C4	PEE-AY	XA 7000 E	XA 7000 BA	C
351 c.i.d. 2V	Ford – C4	ARD2ZP/GC	XA 7000 GC		D
302 c.i.d.	Ford – C4	PEF-J	XA 7000 BA		E
351 c.i.d. 2V	Ford – C4	PEF-C1	D1ZP 7000 JA	XA 7000 GC	F
302 c.i.d.	Ford – C4	PEF-J	XA 7000 BA		G
302 c.i.d.	Ford – C4	PEF-J2/J3	XB 7000 CA		H
351 c.i.d. 2V	Ford – C4	PEF-000-C/C6	XB 7000 GC		I
200 c.i.d.	Borg Warner	ARD2DP/AA	XA 7000 A		M
250 c.i.d. 1V	Borg Warner	ARD2DP/CA	XA 7000 C	XA 7000 DA	N
200 c.i.d.	Borg Warner	72DA/CA	XA 7000 CB		O
250 c.i.d. 1V	Borg Warner	72DA/DA	XA 7000 DA		P
200 c.i.d.	Borg Warner	74DA/AB	XB 7000 A		Q
250 c.i.d. 1V	Borg Warner	74DA/BB	XB 7000 B		R
351 c.i.d. 4V	Ford – F.M.X.	PHB-000-S	D2FP 7003 EA	D3FP 7003 DA	U
351 c.i.d. 4V	Ford – F.M.X.	PHB-S	D00P 7003 U		V
351 c.i.d. 4V	Ford – F.M.X.	PHB-000-S/S5	XA 7000 FA		W
351 c.i.d. 4V	Ford – F.M.X.	PHB-000-S	D3FP 70003 DA		W

DESCRIPTION	PART NUMBER	AUTOMATIC TRANSMISSION ASSEMBLIES PARTS LIST "A TO L"											
		A	B	C	D	E	F	G	H	I	J	K	L
KIT – GASKETS	**7153**												
	D2AZ 7153 A		B	C	D	E	F	G					
To 12/74	D2AZ 7153 A	A							H	I			
From 12/74	D5AZ 7153 B*								H	I			
Bolt – 7/16" – 14 x 1-7/8" – transmission to engine	20516 S36	2	2										
Bolt – 7/16" – 14 x 2¼" – transmission to engine	20536 S36	2	2										
Bolt – 7/16" – 14 x 1-5/8" – transmission to engine	20490 S8			6	6	6	6	6	6	6			
Washer – lock – 7/16" – transmission to engine	34808 S78			6	6	6	6	6	6	6			
TUBE – OIL DISTRIBUTOR	**7D000**												
3.75" long – 2.15" rise	C4AZ 7D000 A	A	B	C	D	E	F	G	H	I			
4.25" long – 2.67" rise	C4AZ 7D000 B	A	B	C	D	E	F	G	H	I			
BUSHING – REVERSE BRAKE DRUM	**7D001**												
4¾" O.D. – 1" long	C4AZ 7D001 A	A	B	C	D	E	F	G	H	I			
SLEEVE – MAIN OIL PRESSURE BOOSTER	**7D002**												
9/16" I.D. – 59/64" O.D. – 15/16" long	D0AZ 7D002 A	A	B	C	D	E	F	G	H	I			
CASE – TRANSMISSION	**7005**												
To 1/74	D2ZZ 7005 A	A											
From 1/74 to 12/74	D20Z 7005 L	A											
From 12/74	D5FP 7005 BA*	A											
	D2ZZ 7005 A		B	C									
	D20Z 7005 E				D	E							
	D0AZ 7005 D						F						
	D20Z 7005 K							G					
To 12/74	D20Z 7005 K								H	I			
From 12/74	D5FP 7005 AA*								H	I			
Plug dry seal – 1/8" – 27 – to plug servo pressure hole in case	87650 S8	A	B	C	D	E	F	G	H	I			
PLANET ASSY. – REVERSE	**7D006**												
	D20Z 7D006 A	A	B	C	D	E	F	G	H	I			
CLIP – VACUUM DIAPHRAGM	**7F006**												
Use with push in type diaphragm – from 1/74	D2AZ 7F006 A	A											
Use with push in type diaphragm	D2AZ 7F006 A							G	H	I			
PLATE – MAIN CONTROL SEPARATING	**7A008**												
To 12/74	D2AZ 7A008 B	A											
From 12/74	D4DZ 7A008 A*	A											
	D2AZ 7A008 B		B	C									
	D20Z 7A008 A				D	E							
	D3AZ 7A008 A						F	G					
To 12/74	D3AZ 7A008 A								H	I			
From 12/74	D5DZ 7A008 A*								H	I			
SEAL – OUTPUT SHAFT OIL	**7A011**												
1" I.D. – 3/16" long (4) ribs on O.D.	B9AP 7A011 A	A											
Snap ring oil seal retaining	372401 S	A											
RING – GOVERNOR HOUSING SEAL	**7D011**												
	C4AZ 7D011 A	3	3	3	3	3	3	3	3	3			

DESCRIPTION	PART NUMBER	AUTOMATIC TRANSMISSION ASSEMBLIES PART LIST "A TO L"											
		A	B	C	D	E	F	G	H	I	J	K	L
WASHER – FRONT PUMP SUPPORT – THRUST	7D014												
0.055" thick – red	D0AZ 7D014 E	A	B	C	D	E	F	G	H	I			
0.072" thick – green	D0AZ 7D014 A	A	B	C	D	E	F	G	H	I			
0.089" thick – neutral	D0AZ 7D014 B	A	B	C	D	E	F	G	H	I			
0.106" thick – black	D0AZ 7D014 C	A	B	C	D	E	F	G	H	I			
0.123" thick – yellow	D0AZ 7D014 D	A	B	C	D	E	F	G	H	I			
GEAR OR SHAFT ASSY. – MAIN DRIVE	7015/7												
9¾" long – 24/26 splines	D1AZ 7017 A	A	B	C	D	E	F	G	H	I			
BUSHING – FRONT PUMP SUPPORT – REAR	7D018												
	D0AZ 7D018 A	A	B	C	D	E	F	G	H	I			
SEAL – FRONT CLUTCH CYLINDER	7D019												
1¾" dia. – 3/32" thick – hooked ends	D0AZ 7D019 A	2	2	2	2	2	2	2	2	2			
INDICATOR ASSY. – OIL LEVEL	7A020												
To 12/74	XW 7A020 B	A											
From 12/74	D20Z 7A020 A*	A											
	XW 7A020 B		B	C	D	E	F	G					
To 12/74	XW 7A020 B								H	I			
From 12/74	D20Z 7A020 A*								H				
From 12/74	D20Z 7A020 B*									I			
SEAL – FRONT CLUTCH CYLINDER	7D020												
1.13/16" dia. – 3/32" thick – hooked ends	D0AZ 7D020 A	2	2	2	2	2	2	2	2	2			
PISTON – SERVO – INTERMEDIATE BAND	7D022												
Stamped B	C5AZ 7D022 A	A											
Stamped A	C5AZ 7D022 B		B	C									
Stamped R	D0AZ 7D022 A				D	E	F	G	H	I			
Oil hole in line with slot – to 1/74	C9AZ 7D023 A	A											
Oil hole offset from slot – from 1/74	D3AZ 7D023 A	A											
Oil hole in line with slot	C9AZ 7D023 A		B	C	D	E							
Oil hole offset from slot	D3AZ 7D023 A						F	G	H	I			
Ring 3/8" retaining	97515 S	A	B	C	D	E	F	G	H	I			
ROD TRANSMISSION TO BELLCRANK LEVER (REFER 7A095)	7A024												
SEAL – INTERMEDIATE BAND SERVO PISTON – LARGE	7D024												
3.5/16" I.D. x 3.13/16" O.D. (4) white stripes	C4AZ 7D024 A	A	B	C	D	E	F	G	H	I			
2.7/8" I.D. x 3.5/16" O.D. (4) orange stripes	D0AZ 7D024 A	A	B	C	D	E	F	G	H	I			
BUSHING – TRANS. CASE	7025												
1.21/64" O.D. x 29/32" long – 4 oil holes	C4AZ 7025 A	A	B	C	D	E	F	G	H	I			
SEAL – INTERMEDIATE BAND SERVO PISTON – SMALL	7D025												
2¼" I.D. x 2¾" O.D. green stripes	C40Z 7D025 A	A											
2.3/8" I.D. x 2.7/8" O.D. white stripes	C4AZ 7D025 B		B	C	D	E	F	G	H	I			
GASKET – INTERMEDIATE BAND SERVO COVER	7D026												
	C4AZ 7D026 C	A	B	C	D	E	F	G	H	I			
COVER – INTERMEDIATE BAND SERVO	7D027												
Stamped B & C6AP-7D027-B – includes bolts	C40Z 7D027 E	A											
Stamped C6AP-7D027-C – includes bolts	C4AZ 7D027 F		B	C									
Stamped "R" and "RF DOAP-7D027-A"	D0AZ 7D027 A				D	E	F	G	H	I			

DESCRIPTION	PART NUMBER	AUTOMATIC TRANSMISSION ASSEMBLIES PARTS LIST "A TO L"											
		A	B	C	D	E	F	G	H	I	J	K	L
SPRING – INTERMEDIATE BAND SERVO PISTON	**7D028**												
White stripe	C4AZ 7D028 A	A	B	C	D	E	F	G	H	I			
STRUT – FRONT & REAR BAND (REFER ALSO 7A175)	**7D029**												
Front actuating – to 1/74	C8AZ 7D029 A	A											
Front actuating – from 1/74	D3AZ 7D029 A	A											
Front actuating	C8AZ 7D029 A		B	C	D	E	F						
Front actuating	D3AZ 7D029 A							G	H	I			
Rear actuating	C4AZ 7D029 A	A	B	C	D	E	F	G	H	I			
Front – anchor – to 1/74	C5AZ 7D029 B	A											
Front – anchor – from 1/74	D3AZ 7D029 B	A											
Front anchor	C5AZ 7D029 B		B	C	D	E	F						
Front anchor	D3AZ 7D029 B							G	H	I			
SPRING – REVERSE SERVO PISTON	**7D031**												
6 coils – 1.5/16" dia.	D0AZ 7D031 A	A	B	C	D	E	F	G	H	I			
VENT ASSY. – CASE	**7034**												
	D2TZ 7034 A	A	B	C	D	E	F	G	H	I			
BUSH – EXTENSION HOUSING	**7A034**												
1½" I.D. x 1.5/8" O.D. x 1½" long	B3TZ 7A034 A	A	B	C	D	E	F	G	H	I			
BAND ASSY. – INTERMEDIATE	**7D034**												
	D2AZ 7D034 A	A	B	C	D	E	F	G	H	I			
COVER – REVERSE BAND SERVO	**7D036**												
	D0DZ 7D036 A	A	B	C	D	E	F	G	H	I			
Bolt – cover to case – 5/16" – 18 x 5/8"	20326 S7	4	4	4	4	4	4	4	4	4			
EXTENSION ASSY. – TRANSMISSION	**7A039**												
To 12/74	D2AZ 7A039 B	A							H	I			
From 12/74	D5AZ 7A039 D*	A							H	I			
	D2AZ 7A039 B		B	C	D	E	F	G					
Bolt shoulder – 3/8" – 16 x 1½" – housing to case (not serviced)	371186 S	6	6	6	6	6	6	6	6	6			
Washer – lock 3/8" – housing to case	351487 S	6	6	6	6	6	6	6	6	6			
SEAL – REVERSE BAND SERVO PISTON COVER	**7D040**												
3½" dia. – 3/32" thick	D0AZ 7D040 A	A	B	C	D	E	F	G	H	I			
DRUM ASSY. – INTERMEDIATE BRAKE	**7D044**												
(1) external groove on tabs	D0AZ 7D044 A	A	B	C	D	E	F	G	H	I			
SEAL – OIL EXTENSION HOUSING	**7052**												
To 12/74	XB 7052 A	A							H	I			
From 12/74	D5AZ 7052 B*	A							H	I			
	XB 7052 A		B	C	D	E	F	G					
BUSHING – REAR CLUTCH HUB	**7E059**												
	C6AZ 7E059 A	A	B	C	D	E	F	G	H	I			
SHAFT ASSY. – OUTPUT	**7060**												
34-37-39 teeth – 19.7/8" long	D0AZ 7060 A	A	B	C	D	E	F	G	H	I			
Cup plug – O.N.R.	353575 S			C		E							
GOVERNOR ASSY.	**7C063**												
Pink	D30Z 7C063 B	A											
Green	D0FZ 7C063 A		B	C	D	E	F						
Orange	D30Z 7C063 A							G					
Orange – to 1/74	D30Z 7C063 A								H				
Pink – from 1/74	D30Z 7C063 B								H				
Pink	D30Z 7C063 B									I			
Ring 1¼" retaining attach governor assy. to output shaft	97533 S	A	B	C	D	E	F	G	H	I			

DESCRIPTION	PART NUMBER	AUTOMATIC TRANSMISSION ASSEMBLIES PARTS LIST "A TO L"											
		A	B	C	D	E	F	G	H	I	J	K	L
GEAR ASSY. – SUN	7D063												
2.13/32" long – 32 teeth	C4AZ 7D063 B	A	B	C	D	E	F	G	H	I			
Snap ring – 1.13/16" I.D. – gear to shell	378254 S	2	2	2	2	2	2	2	2	2			
SHELL – INPUT	7D064												
Cup shaped – 5¼" O.D. x 3.1/8" wide	D20Z 7D064 A	A	B	C	D	E	F	G	H	I			
Snap ring – 1-13/16" – shell to gear assy.	378254 S	2	2	2	2	2	2	2	2	2			
BUSHING – SUN GEAR	7D065												
1.7/32" O.D. x 5/8" long	C4AZ 7D065 A	2	2	2	2	2	2	2	2	2			
PLATE – CLUTCH PRESSURE	7B066												
Front clutch – 0.220" thick	C4AZ 7B066 A	A	B	C	D	E	F	G	H	I			
Rear clutch – front plate	C8AZ 7B066 C	A	B	C	D	E	F	G	H	I			
Rear clutch – rear plate	C4AZ 7B066 A	A	B	C	D	E	F	G	H	I			
WASHER – INPUT SHELL THRUST	7D066												
3-5/16" dia. – 32 internal teeth	C4AZ 7D066 B	A	B	C	D	E	F	G	H	I			
HUB – CLUTCH	7B067												
Rear clutch includes bushing	C5AZ 7B067 B	A	B	C	D	E	F	G	H	I			
SPRING – CLUTCH PISTON DISC	7B070												
Rear clutch	C4AZ 7B070 B	A	B	C	D	E	F	G	H	I			
SPRING – PARKING PAWL RETAINER	7D070												
2½ coils – 15/16" free length	C4AZ 7D070 A	A	B	C	D	E	F	G	H	I			
SHAFT – PARKING PAWL	7D071												
1.9/16" long – ½" dia – use with C4AZ-7A441-C pawl	C4AZ 7D071 B	A	B	C	D	E	F	G	H	I			
WASHER – REVERSE DRUM TO CASE	7D072												
	D2AZ 7D072 A	A	B	C	D	E	F	G	H	I			
CLIP – ENGINE TO TRANS. VACUUM TUBE	7B085												
O.N.R.	C6AA 7B085 A	A	B	C	D	E	F	G	H	I			
GASKET – EXTENSION HOUSING	7086												
	C4AZ 7086 C	A	B	C	D	E	F	G	H	I			
CONNECTOR – ENGINE TO TRANS. VACUUM TUBE – FRONT	7B086												
	XY 7B086 AA	A											
	C6ZA 7B086 A		B										
	C1AA 7B086 E			C	D	E	F	G	H	I			
CONNECTOR – ENGINE TO TRANS. VACUUM TUBE – REAR	7B087												
	C6AA 7B087 A	A	B	C	D	E	F	G	H	I			
WASHER – FORWARD CLUTCH HUB THRUST	7D090												
1.1/8" I.D. x 2.5/16" tab O.D. tabs marked X, Y, Z.	D0AZ 7D090 A	A	B	C	D	E	F	G	H	I			
KIT – WASHER REVERSE CLUTCH THRUST	7D091												
0.033" thick spacer	D0AZ 7D091 F	a/r	a/r	a/r	a/r	a/r	a/r	a/r	a/r	a/r			
0.042" thick	D0AZ 7D091 A	A	B	C	D	E	F	G	H	I			
0.057" thick	D0AZ 7D091 B	A	B	C	D	E	F	G	H	I			
0.074" thick	D0AZ 7D091 C	A	B	C	D	E	F	G	H	I			
BAND ASSY. – REVERSE	7D095												
5.1/8" I.D. x 2.7/32" wide	D0AZ 7D095 A	A	B	C	D	E	F	G	H	I			

DESCRIPTION	PART NUMBER	AUTOMATIC TRANSMISSION ASSEMBLIES PARTS LIST "A TO L"											
		A	B	C	D	E	F	G	H	I	J	K	L
BEARING – GEAR TO PLANET COVER – THRUST	**7C096**												
2" I.D. x 3.1/8" O.D. x 0.063" thick	C4AZ 7C096 A	2	2	2	2	2	2	2	2	2			
SCREEN ASSY. – OIL PAN (REFER ALSO 7E387)	**7A098**												
	D0DZ 7A098 B	A	B	C	D	E	F	G	H	I			
CONTROL ASSY. – MAIN	**7A100**												
To 1/74	D20Z 7A100 B	A											
From 1/74 to 12/74	D30Z 7A100 E	A											
From 12/74	D40Z 7A100 C*	A											
	D20Z 7A100 B		B		D								
	D2FP 7A100 CB			C									
	D2FP 7A100 HA					E							
	D1AZ 7A100 B						F						
	D30Z 7A100 E							G					
To 1/74	D30Z 7A100 E								H				
From 1/74 to 12/74	D40Z 7A100 C								H				
To 12/74	D40Z 7A100 D									I			
From 12/74	D50Z 7A100 C*								H	I			
Bolt – body to case	20384 S78	7											
Screw – 14 – 20 x 1½" – 7A100 to 7005 – O.N.R.	304756 S36						F						
GASKET – VALVE BODY SEPARATOR PLATE	**7D100**												
	D2AZ 7D100 A	A	B	C	D	E	F	G					
To 1/74	D2AZ 7D100 A								H				
From 1/74	D40Z 7D100 A								H				
	D40Z 7D100 A									I			
PUMP ASSY. – OIL FRONT	**7A103**												
To 1/74	D0AZ 7A103 A	A											
From 1/74 to 12/74	C4AZ 7A103 G	A											
From 12/74	D0FP 7A103 AFOC*	A											
	D0AZ 7A103 A		B		D		F	G	H	I			
	C4AZ 7A103 G			C		E							
Bolt 3/8" – 16 x 1.3/8" pump to housing – O.N.R.	379296 S	7	7	7	7	7	7	7	7	7			
SUPPORT ASSY. – CONVERTOR STATOR	**7A108**												
	D0AZ 7A108 A	A	B	C	D	E	F	G	H	I			
Bolt – 5/16" – 18 x 5/8" support to pump	20326 S7	5	5	5	5	5	5	5	5	5			
LEVER ASSY. – MANUAL CONTROL VALVE DETENT	**7A115**												
	D0AZ 7A115 A	A	B	C	D	E	F	G	H	I			
Ring ¼" lever to rod retaining	97409 S2	A	B	C	D	E	F	G	H	I			
Ring 3/8" lever to case retaining	97411 S	A	B	C	D	E	F	G	H	I			
LEVER ASSY. – PARKING PAWL TOGGLE OPERATING	**7A117**												
	C4AZ 7A117 A	A	B	C	D	E	F	G	H	I			
GASKET – FRONT OIL PUMP TO CASE	**7A136**												
	C4AZ 7A136 C	A	B	C	D	E	F	G	H	I			
GEAR – OUTPUT SHAFT RING	**7A153**												
	C4AZ 7A153 C	A	B	C	D	E	F	G	H	I			
Ring – 4½" snap – gear to shaft	378874 S	2	2	2	2	2	2	2	2	2			
Ring snap – 1.3/16" dia. – gear to shaft	97532 S15	A	B	C	D	E	F	G	H	I			
BUSHING – REAR BRAKE DRUM SUPPORT (REFER 7B257)	**7B157**												

DESCRIPTION	PART NUMBER	AUTOMATIC TRANSMISSION ASSEMBLIES PARTS LIST "A TO L"											
		A	B	C	D	E	F	G	H	I	J	K	L
PLATE – CLUTCH – INTERNAL SPLINES – FRICTION	7B164												
Front clutch	C5AZ 7B164 B	4	4	4	4	4	4	4	4	4			
Rear clutch	C8AZ 7B164 D	5	5	5	5	5	5	5	5	5			
HUB – OUTPUT SHAFT	7D164												
70 helical – 37 spline teeth – 1¼" long	C4AZ 7D164 A	A	B	C	D	E	F	G	H	I			
PIN – PARKING LEVER SUPPORT	7D165												
	C4AP 7D165 B			C		E							
SUPPORT – PARKING PAWL LEVER O.N.R.	7D166												
	C4AZ 7D166 A	A	B	C	D	E	F	G	H	I			
BOLT – OVERRUNNING CLUTCH CASE	7D167												
	C4AZ 7D167 B	6	6	6	6	6	6	6	6	6			
RACE – OVERRUNNING CLUTCH – INNER	7D171												
	D2AZ 7D171 A	A	B	C	D	E	F	G	H	I			
STRUT – REAR BAND ANCHOR	7A175												
	D0AZ 7A175 A	A	B	C	D	E	F	G	H	I			
SPRING – TRANS. KICKDOWN (REFER SECTION 95)	7B176												
PISTON & SEAL ASSY. – REVERSE BAND SERVO	7D189												
Stamped D0AP-7D030-A includes seal rod & spacer	D1AZ 7D189 A	A	B	C	D	E	F	G	H	I			
ROLLER – OVERRUNNING CLUTCH 5/16" dia. x 7/8" long	7190												
	C4AZ 7190 B	a/r	a/r	a/r	a/r	a/r	a/r	a/r	a/r	a/r			
GASKET – OIL PAN	7A191												
To 1/74	C50Z 7A191 B	A							H				
From 1/74	D0DZ 7A191 B	A							H				
	C50Z 7A191 B		B	C				G					
	C5AZ 7A191 B				D	E	F						
	D0DZ 7A191 B									I			
RETAINER – OVERRUNNING CLUTCH SPRING	7D191												
Includes 12 springs	C4AZ 7A191 C	A	B	C	D	E	F	G	H	I			
PAN ASSY. – TRANSMISSION OIL	7A194												
	D0DZ 7A194 B	A	B	C									
	D0AZ 7A194 A				D	E	F	G	H	I			
Bolt – 5/16" – 18 x 0.54" pan to case	378782 S	11	11	11	11	11	11	11	11	11			
BALL – COASTING BOOSTER VALVE SHUTTLE	7E195												
	C7AZ 7E195 A	3	3	3	3	3	3	3	3	3			
RETAINER – GOVERNOR SEC. VALVE SPRING	7D218												
1" x 7/8" – O.N.R.	C4AZ 7D218 B	A	B	C	D	E	F	G	H	I			
BODY – GOVERNOR (REFER ALSO 7C053)	7D220												
Includes screw	C4AZ 7D220 B	A	B	C	D	E	F	G	H	I			
SPACER – PRESSURE THROTTLE VALVE SECONDARY	7D227												
From 1/74	C4AZ 7D227 A								H				
	C4AZ 7D227 A									I			

DESCRIPTION	PART NUMBER	AUTOMATIC TRANSMISSION ASSEMBLIES PARTS LIST "A TO L"											
		A	B	C	D	E	F	G	H	I	J	K	L
TUBE ASSY. – OIL FILLER	7A228												
To 12/74	XY 7A228 AB	A											
From 12/74	D20Z 7A228 E*	A											
	D10Z 7A228 B		B										
	XW 7A228 E			C	D	E	F	G					
To 12/74	XW 7A228 E								H	I			
From 12/74	D20Z 7A228 A*								H				
From 12/74	D40Z 7A228 A*									I			
"O" ring tube to housing	87034 S94	A	B	C	D	E	F	G	H	I			
Spacer – tube to housing	AR 387583 S							G	H	I			
	D10Z 7A228 B		B										
	XW 7A228 E			C	D	E	F	G	H	I			
"O" ring tube to housing	87034 S94	A	B	C	D	E	F	G	H	I			
Spacer – tube to housing	AR 387583 S							G	H	I			
ROD ASSY. – PARKING LEVER ACTUATING	7A232												
	C4AZ 7A232 C	A	B	C	D	E	F	G	H	I			
Washer – flat – rod to lever	358662 S	3	3	3	3	3	3	3	3	3			
Ring – ¼" – retaining rod to link	97409 S2	2	2	2	2	2	2	2	2	2			
SLEEVE – OIL DISTRIBUTOR	7C232												
	D0AZ 7C232 A	A	B	C	D	E	F	G	H	I			
Bolt – 5/16" – 18 x 1" sleeve to case	20386 S36	4	4	4	4	4	4	4	4	4			
GEAR – OUTPUT SHAFT PARKING	7A233												
	C4AZ 7A233 A	A	B	C	D	E	F	G	H	I			
BEARING ASSY. – SUN GEAR THRUST	7D234												
	C4AZ 7D234 A			C									
WASHER – PLANET PINION THRUST	7A242												
	D20Z 7A242 A	2	2	2	2	2	2	2	2	2			
SCREEN ASSY. – GOVERNOR OIL	7E242												
	C7AZ 7E242 A	A	B	C	D	E	F	G	H	I			
STRUT ASSY. – FRONT BAND ANCHOR (REFER 7A158)	7E243												
TUBE ASSY. – BREATHER	7A246												
Dealer to improvise	7A246	a/r											
SWITCH ASSY. – GEAR SHIFT NEUTRAL	7A247												
To 1/74	SW 1148	A											
From 1/74	SW 1028	A											
	SW 1148		B	C									
	SW 1028				D	E	F	G	H	I			
Clip	356640 S100						F	G		I			
SEAL ASSY. – FRONT OIL PUMP	7A248												
2¾" O.D. – 2" I.D. x 3/8" thick	C2AZ 7A248 A	A	B	C	D	E	F	G	H	I			
SHAFT & LEVER ASSY. – MANUAL CONTROL	7A256												
	D0ZZ 7A256 A	A	B	C	D	E	F	G	H	I			
RING – CLUTCH PISTON SPRING RETAINING	7D256												
Rear clutch – 2.5/8" I.D. x 2.7/8" O.D. x 1/8" thick	C4AZ 7D256 A	A	B	C	D	E	F	G	H	I			
BUSHING – FRONT OIL PUMP	7B258												
	C0AP 7B258 A	A	B	C	D	E	F	G	H	I			

DESCRIPTION	PART NUMBER	AUTOMATIC TRANSMISSION ASSEMBLIES PARTS LIST "A TO L"											
		A	B	C	D	E	F	G	H	I	J	K	L
BUSHING – FRONT PUMP SUPPORT FRONT	7B261												
27/32" I.D. x 31/32" O.D.	D0AZ 7B261 A	A	B	C	D	E	F	G	H	I			
LEVER ASSY. – D/SHIFT DETENT – INNER	7D261												
	D0AZ 7D261 A	A	B	C	D	E	F	G	H	I			
Nut – lever to shaft	33798 S78	A	B	C	D	E	F	G	H	I			
Lockwasher – lever to shaft	34806 S7	A	B	C	D	E	F	G	H	I			
PISTON ASSY. – CLUTCH	7A262												
Forward clutch – stamped D0AP-7A258-B	D0AZ 7A262 B	A	B	C	D	E	F	G	H	I			
Reverse clutch – stamped D0AP-7A258-A	D1AZ 7A262 B	A	B	C	D	E	F	G	H	I			
O RING – THROTTLE CONTROL SHAFT OIL	77265												
5/16" I.D. x 7/16" O.D. x 1/8" thick	1P 77265 B	A	B	C	D	E	F	G	H	I			
CONNECTOR ASSY. – OIL TUBE	7D273												
Straight	C3AZ 7D273 A	A	B	C	D	E	F	G	H	I			
90° elbow	C9ZZ 7D273 A	A	B	C	D	E	F	G	H	I			
"O" ring – ½" O.D. – oil cooler connection seal	370865 S91	2	2	2	2	2	2	2	2	2			
"O" ring – 7/16" O.D. – oil cooler connection seal	380892 S94	2	2	2	2	2	2	2	2	2			
O RING – FRONT BAND SERVO PISTON	7A294												
Forward clutch	D0AZ 7A924 A	A	B	C	D	E	F	G	H	I			
Reverse clutch	D0AZ 7D404 A	A	B	C	D	E	F	G	H	I			
SPACER – REVERSE BAND SERVO	7D300												
15/16" O.D. – 3/8" I.D. – 1/8" thick	C4AZ 7D300 B	A	B	C		E							
SPRING ASSY. – MANUAL VALVE DETENT	7E332												
Includes pin & roller	D0DZ 7E332 B	A	B	C	D	E	F	G	H	I			
PLATE – THROTTLE PRESSURE BOOSTER STOP	7E336												
	D0AZ 7E336 A	2	2		2								
CYLINDER ASSY. – CLUTCH	7A360												
28 internal splines, 42 external splines	D1AZ 7A360 A	A	B	C	D	E	F	G	H	I			
WASHER – OUTPUT SHAFT THRUST REAR	7B368												
1.3/16" I.D. x 0.030" thick – 3 slots	C4AZ 7B368 A	A	B	C	D	E	F	G	H	I			
PIN – THROTTLE PRESSURE BOOSTER RETAINER	7D375												
15/16" long – 1/8" dia.	C5AZ 7D375 A	A	B	C	D	E	F	G	H	I			
VALVE – INTERMEDIATE SERVO ACCUMULATOR CHECK	7D376												
¼" dia. – 29/32" thick	C5AZ 7D376 A	A	B	C	D	E	F	G	H	I			
DIAPHRAGM ASSY. – VACUUM THROTTLE VALVE	7A377												
Threaded type – to 1/74	TM 2	A											
Push in type – from 1/74	TM 15	A											
Threaded type	TM 2		B	C	D	E	F						
Push in type	TM 15							G	H	I			

DESCRIPTION	PART NUMBER	AUTOMATIC TRANSMISSION ASSEMBLIES PARTS LIST "A TO L"											
		A	B	C	D	E	F	G	H	I	J	K	L
ROD – THROTTLE CONTROL VALVE	7A380												
1/8" dia. – with threaded type diaphragm	C4AZ 7A380 A	A	B	C	D	E	F						
Kit – consists of (1) each D3AP-7A380-HA, JA, KA, LA, MA – selective fit – push in type diaphragm	D3AZ 7A380 B							G	H	I			
SCREEN – MAIN CONTROL	7E387												
Thimble shaped – from 1/74	D30Z 7E387 A								H				
VALVE – MAIN OIL PRESSURE REGULATOR	7C388												
From 1/74	C7AZ 7C388 A	A											
	C7AZ 7C388 A			C		E		G	H	I			
LEVER ASSY. – DOWNSHIFT CONTROL – OUTER	7A394												
	C4DZ 7A394 A	A	B	C		E		G					
	D0DZ 7A394 A				D		F			I			
To 1/74	C4DZ 7A394 A								H				
From 1/74	D0DZ 7A394 A								H				
RETAINER – THROTTLE PRESSURE BOOSTER STOP PLATE	7E396												
To 12/74	D0AZ 7E396 B	A											
From 12/74	D3AZ 7E396 A*	A											
	D0AZ 7E396 B		B	C	D	E	F	G	H	I			
PLANETARY GEAR AND DRUM ASSY.	7A398												
	D1AZ 7A398 A	A	B	C	D	E	F	G	H	I			
SEAL – FRONT CLUTCH PISTON – INNER (REFER 7A294)	7D404												
GASKET – THROTTLE CONTROL VALVE	7B426												
	C1AP 7B426 A	A	B	C	D	E	F	G	H	I			
PAWL ASSY. – PARKING	7A441												
With roller	C4AZ 7A441 C	A	B	C	D	E	F	G	H	I			
PLATE – CLUTCH – EXTERNAL SPLINES – STEEL	7B442												
Front & rear clutch	C4AZ 7B442 B	8	8	8	8	8	8	8	8	8			
RACE – OVERRUNNING CLUTCH – OUTER	7B456												
	D4FZ 7B456 A*	A	B	C	D	E	F	G	H	I			
SPRING – CLUTCH PISTON	7A480												
Front clutch kit – 2½" dia. – 2" long	D0AZ 7A480 A	A	B	C	D	E	F	G	H	I			
SCREW – BAND ADJUSTING – REVERSE AND INTERMEDIATE	7C492												
	C4AZ 7C492 B	2	2	2	2	2	2	2	2	2			
Nut – ½" – 16 screw to case	380850 S	2	2	2	2	2	2	2	2	2			
LINK – PARKING PAWL TOGGLE OPERATING LEVER	7C495												
	C4AZ 7C495 A	A	B	C	D	E	F	G	H	I			
Ring – link to case	97409 S2	A	B	C	D	E	F	G	H	I			
Flat washer, parking pawl to case	358662 S	2	2	2	2	2							
Also actuating rod to lever	358662 S						2	2	2	2			
OIL SEAL – MANUAL CONTROL LEVER	7B498												
To 12/74	C7AZ 7B498 A	A							H	I			
From 12/74	D5AZ 7B498 A*	A							H	I			
	C7AZ 7B498 A		B	C	D	E	F	G					

DESCRIPTION	PART NUMBER	AUTOMATIC TRANSMISSION ASSEMBLIES PARTS LIST "A TO L"											
		A	B	C	D	E	F	G	H	I	J	K	L
DRUM ASSY. – REVERSE BRAKE	**7C498**												
	C8AZ 7C498 A	A	B	C	D	E	F	G	H	I			
ROLLER – REAR CLUTCH SUN GEAR FRONT BEARING (REFER 7C458)	**77507**												
RETAINER – CLUTCH PISTON SPRING	**7A527**												
	D2AZ 7A527 A	A	B	C	D	E	F	G	H	I			
Ring – retain spring to piston	383691 S	A	B	C	D	E	F	G	H	I			
RING – FRONT CLUTCH OIL SEAL – REAR (REFER 7C169)	**77543**												
OIL SEAL – CLUTCH PISTON – OUTER	**7A548**												
Forward clutch – 4" I.D. x 4-7/16" O.D.	C4AZ 7A548 C	A	B	C	D	E	F	G	H	I			
Reverse clutch – 4-1/16" I.D. x 4-9/16" O.D.	C8AZ 7A548 B	A	B	C	D	E	F	G	H	I			
RING – SNAP – FRONT & REAR CLUTCH PLATE RETAINING	**7A577**												
5" dia. – 0.052" thick	D0AZ 7A577 B	a/r	a/r	a/r	a/r	a/r	a/r	a/r	a/r	a/r			
5" dia. – 0.066" thick	D0AZ 7A577 A	a/r	a/r	a/r	a/r	a/r	a/r	a/r	a/r	a/r			
5" dia. – 0.080" thick	D0AZ 7A577 C	a/r	a/r	a/r	a/r	a/r	a/r	a/r	a/r	a/r			
5" dia. – 0.094" thick	D0AZ 7A577 D	a/r	a/r	a/r	a/r	a/r	a/r	a/r	a/r	a/r			
SPRING – CONVERTOR OVERRUNNING	**7A814**												
	B9AZ 7A814 A	8	8	8	8	8	8	8	8	8			
CONVERTOR ASSY.	**7902**												
	D00Z 7902 A	A	B	C			F	G					
	D00Z 7902 B				D	E				I			
To 1/74	D00Z 7902 A								H				
From 1/74	D00Z 7902 B								H				
Nut – 3/8" – 24 lock convertor to engine drive plate	378034 S36	4	4	4	4								
Washer	356403 S8	4	4	4	4								
HUB – CONVERTOR IMPELLER	**7915**												
1¾" I.D. x 2-1/16" O.D. x 2-11/16" long	C5AZ 7915 A	A	B	C	D	E	F	G	H	I			
HUB – CONVERTOR TURBINE	**7926**												
	D0AZ 7926 A	A	B	C	D	E	F	G	H	I			
STATOR – CONVERTOR	**7932**												
	C2AZ 7932 B	A	B	C	D	E	F	G	H	I			
WASHER – CONVERTOR STATOR REAR & INTERMEDIATE THRUST	**7937**												
3-9/16" O.D. x 2-1/16" I.D. – ½" thick stamped C5AP 7937 A or C7AP 7937 A	C5AZ 7937 E	a/r											
2-25/32" O.D. x 1-5/16" I.D. – 0.070" wide – natural	C6AZ 7937 BMR	A	B			E							
2-25/32" O.D. x 1-5/16" I.D. – 0.079" wide – red	C6AZ 7937 CMR	A	B			E							
2-25/32" O.D. x 1-5/16" I.D. – 0.087" wide – yellow	C6AZ 7937 DMR	A	B			E							
2-25/32" O.D. x 1-5/16" I.D. – 0.096" wide – blue	C6AZ 7937 EMR	A	B			E							
	C7AZ 7937 AMR			C	D	E							
From 1/74	D3AZ 7937 AMR								H				
SNAP RING – CONVERTOR REACTOR – CLUTCH RETAINER	**7945**												
	1P 7945 A	a/r	a/r	a/r	a/r	a/r	a/r	a/r	a/r	a/r			
RACE – CONVERTOR STATOR CLUTCH – INNER	**7946**												
	B9AZ 7946 A	A	B	C	D	E	F	G	H	I			

DESCRIPTION	PART NUMBER	AUROMATIC TRANSMISSION ASSEMBLIES PARTS LIST "A TO L"											
		A	B	C	D	E	F	G	H	I	J	K	L
RACE – CONVERTOR STATOR CLUTCH – OUTER													
	7947												
	C2AZ 7947 C	A	B	C	D	E	F	G	H	I			
COVER ASSY. – CONVERTOR	7950												
	C8AZ 7950 A	A	B	C	D	E	F	G	H	I			
WASHER – TURBINE TO CONVERTOR COVER													
	7962												
	C4AZ 7962 D	A	B										
STUD – CONVERTOR DRIVE	7964												
	C4AZ 7964 A			4		4		4	4	4			
HOUSING ASSY. – CONVERTOR	7976												
	XY 7976 AA	A	B										
	C50Z 7976 A			C									
	D3BZ 7976 A				D	E	F	G	H	I			
Bolt – 3/8"–16 x 1¾"–housing to case	379296 S	7	7	7	7	7	7	7	7	7			
COVER – CONVERTOR HOUSING LOWER													
	7986												
	C5DZ 7986 B	A	B										
	C5AZ 7986 A				D								

DESCRIPTION	PART NUMBER	AUTOMATIC TRANSMISSION ASSEMBLIES PARTS LIST "M TO X"											
		M	N	O	P	Q	R	S	T	U	V	W	X
KIT – BUSH REPAIR	**7B000**												
	XB 7B000 KT	M	N	O	P	Q	R						
KIT – GASKETS	**7153**												
	XR 7153 A	M	N	O	P	Q	R						
Does not include primary sun gear & shaft oil seals: basic 7C169, 77542, 77543, if req'd use cast iron in place of teflon	C9AZ 7153 A									U	V	W	
Bolt – 7/16" – 14 x 2¼" – transmission to engine	20536 S36	2	2	2	2	2	2						
Bolt – 7/16" – 14 x 1-5/8" – transmission to engine	20490 S8									6	6	6	
Washer – lock – 7/16" – transmission to engine	34808 S78									6	6	6	
SPRING – FRONT BAND SERVO PISTON RETRACTING	**7A003**												
	XY 7A003 A	M	N	O	P	Q	R						
2¼" long – 7/8" O.D.	C9AZ 7A003 B									U	V	W	
CASE – TRANSMISSION	**7005**												
	XW 7005 A	M	N	O									
	CJ 7005 A				P	Q	R						
	D2AZ 7005 B									U			
	C8AZ 7005 F										V		
To 1/74	D2AZ 7005 B											W	
From 1/74	D20Z 7005 J											W	
Plug, dry seal – 1/8" – 27 – to plug servo pressure hole in case	87650 S8									U	V	W	
Plug	87708 S34			O	P	Q	R						
PLATE – MAIN CONTROL SEPARATING	**7A008**												
	C9AZ 7A008 A									U	V	W	
Ball 3/16" dia.	354516 S									U	V	W	
SEAL – OUTPUT SHAFT OIL	**7A011**												
1.3/16" I.D. – 1¼" long – (5) ribs on O.D.	B8AZ 7A011 A										V	W	
RING – GOVERNOR HOUSING SEAL	**7D011**												
	116596 ES	3	3	3	3	3	3						
PLATE – CONTROL LOWER VALVE BODY END	**77014**												
	B8A 77014 A									U	V	W	
Washer No. 10	34803 S78									3	3	3	
Screw No. 10 – 24 x 7/16"	53866 S78									a/r	a/r	a/r	
GEAR OR SHAFT ASSY. – MAIN DRIVE	**7015/7**												
	XW 7015 A	M	N	O	P	Q	R						
7.21/32" long – 54 teeth – 29 splines – includes bushings	C0AZ 7015 C									U	V	W	
WASHER – INPUT SHAFT THRUST ASSY.	**7019**												
Selective fit with B	211E 7019 A	M	N	O	P	Q	R						
Selective fit with A	211E 7019 B	M	N	O	P	Q	R						
2.25/32" O.D. – 1.3/8" I.D.	D2AZ 7019 A									U		W	
2¾" O.D. – 1.3/8" I.D.	B5S 7019 A										V		
SEAL – FRONT CLUTCH CYLINDER	**7D019**												
1.7/8" O.D. – cast iron	C6AZ 7D019 A									4	4	4	
INDICATOR ASSY. – OIL LEVEL	**7A020**												
	XW 7A020 A	M	N	O	P	Q	R						
To 8/74	ZC 7A020 B									U	V	W	
From 8/74	XB 7A020 A											W	

DESCRIPTION	PART NUMBER	AUTOMATIC TRANSMISSION ASSEMBLIES PARTS LIST "M TO X"											
		M	N	O	P	Q	R	S	T	U	V	W	X
BUSHING – TRANS. CASE	**7025**												
1½" O.D. – 7/8" long	B5A 7025 A									U	V	W	
SPRING – MAIN OIL PRESSURE VALVE REGULATOR	**7B025**												
Consists of (1) spring & (1) retainer	C0AZ 7B025 B									U	V	W	
TUBE – CONVERTOR INLET	**7B030**												
	ARC6DZ 7B030 A	M	N	O	P	Q	R						
BUSH – EXTENSION HOUSING	**7A034**												
	XA 7A034 A	M	N	O	P	Q	R						
1-13/16" O.D. x 2½" long	B5AZ 7A034 A									U	V	W	
EXTENSION ASSY. – TRANSMISSION	**7A039**												
With 7 tooth speedo gear – ORC to XA 7A039 C plus 8 tooth gear	XA 7A039 A	M	N	O	P								
With 8 tooth speedo gear	XA 7A039 C	M	N	O	P	Q	R						
12¾" long	D2ZZ 7A039 A									U	V	W	
BOLT – SELF LOCKING	**7B039**												
	XT 7B039 A	4	4	4	4	4	4						
RING – FRONT SERVO PISTON SEAL	**7C050**												
	ARC8DZ 7C050 A	M	N	O	P	Q	R						
1-57/64" I.D. – 2-25/64" O.D.	B1AZ 7C050 B									U		W	
SEAL – RING CLUTCH PISTON OUTER	**7C051**												
	E599 GA 2	M	N	O	P	Q	R						
4¾" I.D. x 5¼" O.D.	C8AZ 7C051 A									U	V	W	
Clip, link rod	V 387784 S	2	2	2	2	2	2						
SEAL – OIL EXTENSION HOUSING	**7052**												
	XB 7052 A	M	N	O	P	Q	R						
2¾" flange O.D. – 1-11/16" I.D. – 1½" long	C3AZ 7052 A									U	V	W	
BODY – GOVERNOR (REFER ALSO 7D220)	**7C053**												
	XA 7C053 A	M	N	O	P	Q	R						
	D2AZ 7C053 A									U			
	D1AZ 7C053 A										V		
To 1/74	D2AZ 7C053 A											W	
From 1/74	D3AZ 7C053 A											W	
Screw & washer – ¼" – 20 x 1-3/8"	112929 ES	2	2	2	2	2	2						
Screw & washer #10 – 24 x 3/8" – O.N.R.	112941 ES	2	2	2	2	2	2						
RING – SNAP	**7059**												
Speedo gear retaining	372511 S	M	N										
Speedo gear retaining	XA 7064 A			O	P	Q	R						
SHAFT ASSY. – OUTPUT	**7060**												
	XA 7060 A	M	N	O	P	Q	R						
15-7/32" long	D10Z 7060 A									U		W	
	C8AZ 7060 A										V		
SEAT – OIL PRESSURE REGULATOR VALVE SPRING	**7C062**												
	C1VP 7V062 A									U	V	W	

DESCRIPTION	PART NUMBER	AUTOMATIC TRANSMISSION ASSEMBLIES PARTS LIST "M TO X"											
		M	N	O	P	Q	R	S	T	U	V	W	X
SLEEVE OIL OUTPUT SHAFT SELECTIVE FIT	**77063**												
Std. ¾" x 1¼" O.D.	B1A 77063 A									U	V		
0.005" o/s	C9AZ 77063 B									U	V		
0.010" o/s	C9AZ 77063 C									U	V		
0.015" o/s	C9AZ 77063 D									U	V		
GOVERNOR ASSY.	**7C063**												
	D2AZ 7C063 A									U			
To 1/74	D2AZ 7C063 A											W	
From 1/74	D3AZ 7C063 B											W	
PLATE – CLUTCH PRESSURE	**7B066**												
Front	XY 7B066 B	M		O		Q							
Front	XY 7B066 A		N		P		R						
Rear	XY 7B066 C	M	N	O	P								
Rear	XB 7B066 A					Q	R						
5" dia. – ¼" thick – 54 teeth	C8AZ 7B066 B									U		W	
5" dia. – 3/8" thick – 54 teeth	C8AZ 7B066 A										V		
HUB – CLUTCH	**7B067**												
Front clutch	211E 7B067	M	N	O	P	Q	R						
Front clutch – 45 external – 20 internal teeth	C8AZ 7B067 A									U	V	W	
SPRING – CLUTCH PISTON DISC	**7B070**												
Front clutch	XW 7B070 A	M	N	O	P	Q	R						
Front clutch – 5-5/16" O.D. – 8 levers	C0AP 7B070 A									U	V	W	
Ring – snap	V 387785 S	M	N	O	P	Q	R						
CLIP – ENGINE TO TRANS. VACUUM TUBE O.N.R.	**7B085**												
	C6AA 7B085 A									U	V	W	
SPRING – REAR CLUTCH PRESSURE PLATE	**7E085**												
	D0AZ 7E085 A									U	V	W	
GASKET – EXTENSION HOUSING	**7086**												
	ARC6DZ 7086 A	M	N	O	P	Q	R						
	D2AZ 7086 A									U		W	
	C8AZ 7086 A										V		
CONNECTOR – ENGINE TO TRANS. VACUUM TUBE – REAR	**7B087**												
Straight – 5½" long	C6AA 7B087 B									U	V	W	
90° angle – 2" x 1"	C90Z 7B087 A									U	V	W	
CLUTCH ASSY. – PLANETARY GEARS	**7A089**												
	E582 GA 2	M	N	O	P	Q	R						
	C3AZ 7A089 A									U	V	W	
SERVO ASSY. – FRONT	**7A094**												
	XY 7A094 B	M		O		Q							
	XY 7A094 A		N		P		R						
Stamped D0AP 7A094 A	D0AZ 7A094 A									U	V	W	
TUBE – ENGINE TO TRANSMISSION – VACUUM	**7B095**												
Use with XB 7A247 A	XB 7B095 A											W	

DESCRIPTION	PART NUMBER	AUTOMATIC TRANSMISSION ASSEMBLIES PARTS LIST "M TO X"											
		M	N	O	P	Q	R	S	T	U	V	W	X
BEARING – GEAR TO PLANET COVER – THRUST	**7C096**												
Needle – 7A348 to 7A626	E585 GA 2	M	N	O	P	Q	R						
Needle – 7A348 to 7A398	ARC6DZ 7C096 A	M	N	O	P	Q	R						
Needle – 7A398 to 7060	ARC6DZ 7C096 B	M	N	O	P	Q	R						
1-15/16" O.D. x 1-3/16" I.D. includes 38 rollers	B8TZ 7C096 C									U	V		
1-15/16" O.D. x 1-3/16" I.D. – includes (38) rollers to 1/74	B8TZ 7C096 C											W	
From 1/74	D3AZ 7C096 A											W	
CLIP – OIL PAN SCREEN RETAINER	**7A097**												
Use with metal screen type filter	C8AZ 7A097 A									U	V	W	
Use with dacron type filters	C8AZ 7A097 E									U	V	W	
CLIP – OIL PAN SCREEN SUPPORT	**7A097**												
Use with dacron type filter	C8AZ 7A097 F									U	V	W	
Use with metal screen type filter	C8AZ 7A097 B									U	V	W	
LEVER – NEUTRAL SWITCH OPERATING	**7B097**												
	XW 7B097 A										V		
SCREEN ASSY. – OIL PAN (REFER ALSO 7E387)	**7A098**												
Front	E579 GA 2	M	N	O	P	Q	R						
Rear	E564 GA 2	M	N	O	P	Q	R						
	FT 39									U	V	W	
Screw – 24 x 3/8"	54430 S	4	4	4	4	4	4						
CONTROL ASSY. – MAIN	**7A100**												
	XY 7A100 A	M	N	O	P								
	XB 7A100 A*					Q	R						
	C9AZ 7A100 K									U			
	D00Z 7A100 B										V		
To 1/74	C9AZ 7A100 K											W	
From 1/74	D4FP 7A100 LA											W	
PUMP ASSY. – OIL FRONT	**7A103**												
	XW 7A103 A	M	N	O	P								
	CJ 7A103 AA					Q	R						
	C8AZ 7A103 A									U	V	W	
Bolt double hex. hd. 5/16" x 7/8" special	XY 7B103 BT	6	6	6	6	6	6						
Bolt front pump – 5/16" – 18 x 7/8"	112949 ES			5	5	5	5						
Screw front pump No. 10 – 12 x 1"	54430 S			O	P	Q	R						
WASHER – FRONT CLUTCH HUB THRUST	**7D104**												
	E516 GA 2	M	N	O	P	Q	R						
SUPPORT ASSY. – CONVERTOR STATOR	**7A108**												
	C8AZ 7A108 A									U	V	W	
Bolt No. 10 – 24 x 5/8" support to pump not serviced	54086 S									a/r	a/r	a/r	
LEVER ASSY. – MANUAL CONTROL VALVE DETENT	**7A115**												
	ARC6DZ 7A115 A	M	N	O	P	Q	R						
	C3AZ 7A115 A									U	V	W	
Nut – 9/16 – 18 – hex. lock	33945 S2									U	V	W	
LEVER ASSY. – PARKING PAWL TOGGLE OPERATING	**7A117**												
	211E 7A117	M	N	O	P	Q	R						
	C3AZ 7A117 C									U	V	W	
Ring 5/16" retaining	374979 S									U	V	W	

DESCRIPTION	PART NUMBER	AUTOMATIC TRANSMISSION ASSEMBLIES PARTS LIST "M TO X"											
		M	N	O	P	Q	R	S	T	U	V	W	X
PIN – PARK PAWL TOGGLE LEVER SUPPORT													
	7A119												
	E535 GA 2	M	N	O	P	Q	R						
	C3AZ 7A119 A									U	V	W	
BUSHING – INPUT SHAFT 7/8" I.D. – ¾" long	**7120**												
	B1AZ 7120 A									U	V	W	
LEVER – PARKING BRAKE TOGGLE	**7A121**												
	211E 7A121	M	N	O	P	Q	R						
	B1AZ 7A121 A									U	V	W	
ROD – PARKING BRAKE LINKAGE	**7A122**												
	211E 7A122 A	M	N	O	P	Q	R						
Clip	V 387784 S	2	2	2	2	2	2						
SNAP RING – OUTPUT SHAFT RING GEAR	**7C122**												
0.055" thick	E549 GA 2	M	N	O	P	Q	R						
0.057" thick	E550 GA 2	M	N	O	P	Q	R						
0.059" thick	E551 GA 2	M	N	O	P	Q	R						
5-13/32" O.D. – 0.055" thick	B1AZ 7C122 A									U	V	W	
5-13/32" O.D. – 0.057" thick	B1AZ 7C122 B									U	V	W	
5-13/32" O.D. – 0.059" thick	B1AZ 7C122 C									U	V	W	
5-13/32" O.D. – 0.064" thick	B1AZ 7C122 D									U	V	W	
5-13/32" O.D. – 0.069" thick	B1AZ 7C122 E									U	V	W	
CENTRE SUPPORT & PLUG ASSY.	**7A130**												
	ARC6DZ 7A130 A	M	N	O	P								
	XB 7A130 A*					Q	R						
	C3AZ 7A130 B									U	V	W	
BUSHING – PLANETARY SUPPORT	**7A132**												
	C4AZ 7A132 A									U		W	
SERVO REPAIR KIT – FRONT Contains (2) cups	**7A135**												
	C2AZ 7A135 A									U		W	
GASKET – FRONT OIL PUMP TO CASE	**7A136**												
	211E 7A136	M	N	O	P	Q	R						
5-9/16" I.D. – 5-15/16" O.D.	B1AZ 7A136 A									U	V	W	
REGULATOR ASSY. – OIL PRESSURE	**7A139**												
	C8AZ 7A139 B									U	V	W	
COVER – OIL PRESSURE REG. BODY	**7A141**												
	C8AZ 7A141 A									U	V	W	
PLATE – OIL PRESSURE REG. BODY	**7A142**												
	C3AZ 7A142 A									U	V	W	
GEAR – OUTPUT SHAFT RING	**7A153**												
	211E 7A153	M	N	O	P	Q	R						
72 internal – 39 external teeth – 6-1/8" O.D. x 1-37/64" wide	D1AZ 7A153 A									U		W	
	C1SP 7A153 A										V		
BUSHING – REAR BRAKE DRUM SUPPORT (REFER 7B257)	**7B157**												
PISTON & BALL ASSY. – REAR CLUTCH	**7D157**												
	72EG 7D157 AA	M	N	O	P	Q	R						
	D0ZZ 7D157 A									U	V	W	

DESCRIPTION	PART NUMBER	AUTOMATIC TRANSMISSION ASSEMBLIES PARTS LIST "M TO X"											
		M	N	O	P	Q	R	S	T	U	V	W	X
STRUT – FRONT BRAKE BAND (ALSO REFER 7A175)													
	7A158												
	211E 7A158	2	2	2	2	2	2						
Actuating 1¾" long 11/16" wide	C9AZ 7A158 A									U		W	
Actuating 1-5/8" long ¾" wide	B1AZ 7A158 A										V		
Anchor 1" long 23/32" wide includes pin	C9AZ 7E243 A									U			
Anchor	C8AZ 7E243 A										V		
Anchor – 1" long 23/32" wide – includes pin – to 1/74	C9AZ 7E243 A											W	
Anchor – from 1/74	D2AZ 7E243 A											W	
TUBE – FRONT PUMP INLET	**7A160**												
	E523 GA 2	M	N	O	P	Q	R						
SPRING – OIL PRESSURE REGULATOR LOW CONTROL VALVE	**7D160**												
	ARC6DZ 7D160 B	M	N	O	P	Q	R						
3-1/8" long – 19 coils	C3AZ 7D160 B									U	V	W	
Ball – check valve	353076 S	M	N	O	P	Q	R						
BAND ASSY. – FRONT (ALSO REFER 7A176)	**7A162**												
To 9/72	XY 7A162 A	M	N	O	P								
From 9/72	XA 7A162 A			O	P	Q	R						
	D2AZ 7A162 A									U		W	
	C9AZ 7A162 A										V		
PISTON & PIN ASSY. – FRONT SERVO BAND	**7A164**												
	ARC8DZ 7A164 A	M		O									
	ARC8DZ 7A164 B		N		P								
	XB 7A164 A*					O							
	XB 7A164 B*						R						
Stamped 1P 77359 A	C9AZ 7A164 A									U	V	W	
PLATE – CLUTCH – INTERNAL SPLINES – FRICTION													
Front – kit	**7B164**												
	E400 Z2	M	N	O	P	Q	R						
	XP 7B164 A	4	5	4	4	4	4						
	CH 7B164 A	5	5	5	5	5	5						
Front clutch – consists of 5 plates 0.058" thick	C9AZ 7B164 A									U	V	W	
Front clutch – consists of 4 plates 0.058" thick													
& 1 plate 0.073" thick	C9AZ 7B164 C									U	V	W	
Front clutch – consists of 4 plates 0.058" thick													
& 1 plate 0.088" thick	C9AZ 7B164 D									U	V	W	
Rear clutch	C8AZ 7B164 G									a/r	a/r	a/r	
SHAFT – FRONT SERVO ACTUATING LEVER	**7A165**												
	211E 7A165	M	N	O	P	Q	R						
1-11/16" long x 7/16" O.D. 3 grooves one end													
– O.N.R.	B7AZ 7A165 A									U	V	W	
WASHER – REAR CLUTCH SUN GEAR THRUST	**7A166**												
1½" I.D. x 2-5/16" O.D. x 1/16 thick	B1AZ 7A166 A									U	V	W	
LEVER – REAR BAND SERVO ACTUATING	**7A169**												
	ARC6DZ 7A169 A	M	N	O	P	Q	R						
	C6AZ 7A169 A									U	V	W	

DESCRIPTION	PART NUMBER	AUTOMATIC TRANSMISSION ASSEMBLIES PARTS LIST "M TO X"											
		M	N	O	P	Q	R	S	T	U	V	W	X
SEAL – PRIMARY SUN GEAR OIL	7C169												
Small	XB 7C169 A	2	2	2	2	2	2						
Large	E573 GA 2	3	3	3	3	3	3						
Front – 1-1/16" O.D. x 3/32" thick – cast iron	1P 77542									2	2	2	
Inter – 1-1/8" O.D. x 3/32" thick – cast iron	C0AZ 7C169 A									2	2	2	
Rear – 15/16" O.D. x 3/32" thick – cast iron	1P 77543 B									2	2	2	
TUBE – CLUTCH AND GOVERNOR OIL	7A170												
Front – O.N.R.	C8AZ 7A173 A									U	V	W	
Intermediate – O.N.R.	C8AZ 7A170 A									U	V	W	
Rear – O.N.R.	C8AZ 7A174 A									U	V	W	
SHAFT – REAR BAND SERVO ACTUATING LEVER	7A171												
	ARC5DP 7A171 A	M	N	O	P	Q	R						
1-15/16" long – ½" dia.	B8AZ 7A171 A									U	V	W	
STRUT – REAR BAND ACTUATING	7A172												
	C1AZ 7A172 A									U	V	W	
SERVO ASSY. – REAR	7B172												
	XW 7B172 A	M	N	O	P	Q	R						
	C8AZ 7B172 B									U	V	W	
TUBE – CLUTCH AND GOVERNOR OIL (REFER ALSO 7A170)	7A173/4												
Rear	E590 GA 2	M	N			Q	R						
Front	E590 GA 2			O	P								
VALVE ASSY. – LUBE CONNECTOR	7D174												
	C3AZ 7D174 A									U	V	W	
STRUT – REAR BAND – ANCHOR	7A175												
½" x 1¼" x 1¼" long	B6AZ 7A175 A									U	V	W	
BAND ASSY. – REAR (ALSO REFER 7A162)	7A176												
To 6/73	ARC6DZ 7A176 A	M											
From 6/73	XA 7A176 A	M											
	XA 7A176 A		N	O	P	Q	R						
1-5/8" wide	B5SZ 7A176 B									U	V	W	
SPRING – TRANS. KICKDOWN (REFER SECTION 95)	7B176												
SCREW – FRONT BAND ADJUSTING	7A178												
	E601 GA 2	M	N	O	P	Q	R						
Set screw 3/8 – 16 x 1-19/32"	D1AZ 7A178 A									U	V	W	
Nut – 3/8" – 16	33827 S	M	N	O	P	Q	R						
Bolt 5/16" – 18 x 1-7/8"	20512 S8	M	N	O	P	Q	R						
Bolt – 5/16" – 18 x 1"	112937 ES	M	N	O	P	Q	R						
Lockwasher 5/16"	34806 S36	M	N	O	P	Q	R						
Nut – 3/8" – 16 – hex. lock	33924 S2									U	V	W	
SCREW – REAR BAND ADJUSTING	7A178												
	ARC6DZ 7A178 A	M	N	O	P	Q	R						
½" – 20 x 2", 5/32" hex. socket head	C9ZZ 7A178 A									U		W	
½" – 20 x 2½", 5/16" square head	C1AP 7A178 B										V		
	V 387780 S	M	N	O	P								
Nut – ½" – 20 – hex. lock	33943 S8									U	V	W	

DESCRIPTION	PART NUMBER	AUTOMATIC TRANSMISSION ASSEMBLIES PARTS LIST "M TO X"											
		M	N	O	P	Q	R	S	T	U	V	W	X
SPRING – PARKING BRAKE ANCHOR RELEASE													
	7A180												
	211E 7A180 A	M	N	O	P	Q	R						
Coil type	E533 GA 2			O	P	Q	R						
ROLLER – OVERRUNNING CLUTCH 5/16" dia" x 7/8" long	**7190**												
	C4AZ 7190 B									a/r	a/r	a/r	
GASKET – OIL PAN	**7A191**												
	211E 7A191	M	N	O	P	Q	R						
	B5AZ 7A191 A									U	V	W	
RETAINER – 3RD & 2ND COASTING ORIFICE VALVE SPRING	**7194**												
	C1AZ 7194 A									U	V	W	
PAN ASSY. – TRANSMISSION OIL	**7A194**												
	XT 7A194 A	M	N	O	P	Q	R						
	C8AZ 7A194 A									U	V	W	
Bolt & washer – pan to case	42719 S2	15	15	15	15	15	15						
Plug drain ¼"	V 388360 S	M	N	O	P	Q	R						
TUBE – CONVERTOR IN & OUT	**7A204**												
	E524 GA 2	M	N	O	P	Q	R						
TUBE – FRONT PUMP OUTLET	**7A204**												
	E525 GA 2	M	N	O	P	Q	R						
TUBE – REAR PUMP OUTLET OIL 2-7/8" long – 3/8" dia. to 5/16" reduction	**7A204**												
	C8AZ 7A204 A										V		
TUBE & COMPENSATOR PRESSURE OIL O.N.R.	**7A206**												
	B5AZ 7A206 A									U	V	W	
TUBE – OIL PRESSURE REGULATOR LUBRICATING													
	7A208												
Rear	E563 GA 2	M	N	O	P	Q	R						
O.N.R.	C8AZ 7A208 A									U	V	W	
SEAL – REAR CLUTCH CYLINDER – PISTON OIL													
	7E212												
1-7/16" I.D. – square cut lip	C8AZ 7E212 A									U	V	W	
PISTON – REAR BAND SERVO ACCUM.	**7E216**												
	C9ZZ 7E216 A										V		
KIT – REAR BAND PISTON & STOP	**7E216**												
Kit includes piston lever & stop	C90Z 7E216 A										V		
GASKET – REAR OIL PUMP TO CASE	**7A222**												
	C8AZ 7A222 A									U	V	W	
TUBE ASSY. – OIL FILLER	**7A228**												
	XW 7A228 F	M	N	O	P	Q	R						
To 8/74	XW 7A228 B									U	V	W	
From 8/74	XB 7A228 A											W	
'O' ring tube to housing	87035 S94	M	N	O	P	Q	R						

DESCRIPTION	PART NUMBER	AUTOMATIC TRANSMISSION ASSEMBLIES PARTS LIST "M TO X"											
		M	N	O	P	Q	R	S	T	U	V	W	X
ROD ASSY. – PARKING LEVER ACTUATING	**7A232**												
2½" long – includes rod spring, trunnion & pin	C3AZ 7A232									U	V	W	
Pin cotter 1/16" x ½"	72003 S7/8									U	V	W	
SLEEVE – OIL DISTRIBUTOR	**7C232**												
Adaptor rear	ARC6DZ 7C232 A	M	N	O	P	Q	R						
Screw – ¼" – 20 x 1/8 adaptor to case	112929 ES	5	5	5	5	5	5						
RACE – FRONT CLUTCH SUN GEAR THRUST FRONT	**7D236**												
	C4AZ 7D236 B									U	V	W	
PLATE – NEEDLE THRUST BEARING (REFER ALSO 7B256)	**7A242**												
	E518 GA 2	M	N	O	P	Q	R						
SCREEN ASSY. – GOVERNOR OIL	**7E242**												
	D2AZ 7E242 A									U	V	W	
STRUT ASSY. – FRONT BAND ANCHOR (REFER 7A158)	**7E243**												
PIN – PARKING PAWL TOGGLE LEVER	**7A244**												
	E532 GA 2	M	N	O	P	Q	R						
	211E 7A244	M	N	O	P	Q	R						
1-5/8" long	B9AP 7A244 A									U	V	W	
KIT – CONTROL OIL PRESSURE COMPENSATOR SPRING	**7D245**												
	D3AZ 7D245 A									U	V	W	
TUBE ASSY. BREATHER	**7A246**												
O.N.R.	C5AZ 7A246 A											W	
SWITCH ASSY. – GEAR SHIFT NEUTRAL	**7A247**												
	XT 7A247 A	M	N										
	CJ 7A247 AA			O	P	Q	R						
Includes mounting bracket	XB 7A247 A									U	V	W	
Less mounting bracket	CJ 7A247 AA											W	
LINK ASSY. – NEUTRAL SWITCH	**7B247**												
	XT 7B247 A	M	N	O	P	Q	R						
SEAL ASSY. – FRONT OIL PUMP	**7A248**												
2¾" O.D. – 2" I.D. x 3/8" thick	C2AZ 7A248 A									U	V	W	
5.620" O.D. – 5.359" I.D.	ARC6DZ 7A248 B	M	N	O	P	Q	R						
Shaft	211E 7A248 A	M	N	O	P	Q	R						
SNAP RING – GOVERNOR	**7E253**												
1-9/16" dia. – 7/64" thick	C8AZ 7E253 A									U	V	W	
SHAFT & LEVER ASSY. – MANUAL CONTROL	**7A256**												
	XW 7A256 A	M	N	O	P	Q	R						
	D00Z 7A256 E									U	V	W	
Plug – welsh	V 387783 S	M	N	O	P	Q	R						
BUSHING – OUTPUT SHAFT	**7B256**												
Plate – needle thrust bearing	E517 GA 2	M	N	O	P								
1½" I.D. x 7/8" long	B5AZ 7B256 A									U	V	W	

DESCRIPTION	PART NUMBER	AUTOMATIC TRANSMISSION ASSEMBLIES PARTS LIST "M TO X"											
		M	N	O	P	Q	R	S	T	U	V	W	X
RING – CLUTCH PISTON SPRING RETAINING	7D256												
Front clutch	E519 GA 2	M	N	O	P	Q	R						
BUSHING – PLANETARY GEAR DRUM SUPPORT FLANGE – INNER	7B257												
1" I.D. – ¾" long	B1AZ 7B257 B									U	V	W	
BUSHING – FRONT OIL PUMP	7B258												
2-1/8" O.D. x 2" I.D. x ¾" wide	C6AZ 7B258 A									U		W	
BUSHING – FRONT PUMP DRIVE GEAR	7B259												
	C1AZ 7B759 A									U	V	W	
BUSHING – REAR OIL PUMP BODY	7B260												
2-1/16" I.D. x 2-3/8" O.D. x ¾" long	B5AZ 7B260 A									U	V	W	
SPRING – MANUAL VALVE DETENT LEVER	7A261												
	211E 7A261	M	N	O	P	Q	R						
1¾" long – 5/16" dia. 23 coils	B8AZ 7A261 A									U	V	W	
Ball 3/8" dia.	353075 S	M	N	O	P	Q	R						
Spring	V 387781 S	M	N	O	P	Q	R						
Pin retaining	V 387782 S	M	N	O	P	Q	R						
BUSHING – FRONT PUMP SUPPORT – FRONT	7B261												
15/16" I.D. – 1-1/16 O.D. – 9/16" long	C8AZ 7B261 A									U	V	W	
'O' ring seal	87034 S94									U	V	W	
LEVER ASSY. – D/SHIFT DETENT-INNER	7D261												
	XW 7D261 A	M	N	O	P	Q	R						
Screw – 24 x 5/8"	54430 S	8	8	8	8	8	8						
Screw – 24 x 15/16" – O.N.R.	54433 S	9	9	9	9	9	9						
Screw – 24 x 3/8" – not serviced	112928 ES	M	N	O	P	Q	R						
Screw – 24 x 1-3/8"	112929 ES	2	2	2	2	2	2						
Pin	305046 S	M	N	O	P	Q	R						
CAM – DOWNSHIFT VALVE	7D261												
Cam – downshift valve	E614 GA 2	M	N										
Rivet – O.N.R.	63422 S	M	N										
PISTON ASSY. – CLUTCH	7A262												
	ARC5DP 7A262 A	M	N	O	P	Q	R						
20° chamfer – 9/32" long on I.D. – 4.54" & 4.55" O.D.	D0AZ 7A262 C									U	V	W	
36° chamfer – 5/32" long on I.D. – 4.55" & 4.56" O.D.	D1AZ 7A262 A									U	V	W	
RETAINER – REAR BAND SERVO PISTON SPRING	7B264												
3¼" O.D.	B8AZ 7B264 C									U	V		
3¼" O.D. – to 1/74	B8AZ 7B264 C											W	
From 1/74	D3AZ 7B264 B											W	
'O' RING – THROTTLE CONTROL SHAFT OIL	77265												
5/16" I.D. x 7/16" O.D. x 1/8" thick	1P 77265 B									U	V	W	

DESCRIPTION	PART NUMBER	AUTOMATIC TRANSMISSION ASSEMBLIES PART LIST "M TO X"											
		M	N	O	P	Q	R	S	T	U	V	W	X
PISTON – REAR BAND SERVO	**7A266**												
	211E 7A266 B	M	N	O	P	Q	R						
	C9AZ 7A266 A										V		
To 1/74	C9AZ 7A266 A											W	
From 1/74	D3AZ 7A266 B											W	
'O' ring	116558 ES	M	N	O	P	Q	R						
VALVE – REAR BAND SERVO PISTON ACCUMULATOR	**7A266**												
1-7/16" O.D. – 1-7/8" long	B8AZ 7A266 A									U	V	W	
GUIDE – FRONT BAND SERVO PISTON	**7A269**												
	ARC8DZ 7A269 A	M		O		Q							
	ARC8DZ 7A269 B		N		P		R						
Stamped C9AP 7A269 A	C9AZ 7A269 A									U	V	W	
SPRING – MAIN OIL PRESSURE REGULATOR VALVE	**7A270**												
	XY 7A270 A	M	N	O	P	Q	R						
CONNECTOR ASSY. – OIL TUBE	**7D273**												
	XW 7D273 A	2	2	2	2	2	2						
LEVER – THROTTLE CONTROL LEVER	**77283**												
	B5A 77283 A									U	V	W	
Nut – 5/16"	33798 S78									U	V	W	
Washer – 5/16" hex. lock	34806 S7									U	V	W	
STOP – REAR BAND ADJUSTING INNER	**7E284**												
1-3/8" long – internal band adjustment	C9ZZ 7E284 A									U		W	
SCREW – PLANET SUPPORT	**7A291**												
	V 387786 S	2	2	2	2	2	2						
	B1AZ 7A291 A									2	2	2	
Washer – 5/8 use with 7A291	34942 S7	2	2	2	2	2	2						
Washer – 3/8" ext. tooth	351487 S									U	V	W	
'O' RING – FRONT BAND SERVO PISTON	**7A294**												
Inner	ARC8DZ 7A294 A	M	N	O	P	Q	R						
Outer	ARC8DZ 7A294 C	M	N	O	P	Q	R						
1" I.D.	C9AZ 7A294 A									U	V	W	
2.10" I.D.	B9AZ 7A294 E									U	V	W	
PIN – PARKING PAWL TOGGLE LEVER	**7A295**												
	211E 7A295	M	N	O	P	Q	R						
	B1AZ 7A295 A									U	V	W	
Seal – parking toggle lower pin	116552 ES	M	N	O	P	Q	R						
PIN – PARKING PAWL SUPPORT	**77312**												
½" dia. – 2" long	1P 77312 A									U	V	W	
SPRING – PARKING PAWL TOGGLE LINK (REFER ALSO 7E416)	**77314**												
O.N.R.	1P 77314 A									U		W	
LINK – PARKING PAWL TOGGLE	**77316**												
	1P 77316 A									U	V	W	
PIN – PARKING PAWL TOGGLE LINK (REFER ALSO 7E415)	**77318**												
5/16" dia. x 7/8" long – O.N.R.	1P 77318 A									U		W	

DESCRIPTION	PART NUMBER	AUTOMATIC TRANSMISSION ASSEMBLIES PARTS LIST "M TO X"											
		M	N	O	P	Q	R	S	T	U	V	W	X
RETAINER – PARKING PAWL TOGGLE SPRING	**77323**												
	B8A 77323 A									U	V	W	
RETAINER – PARK PAWL TOGGLE LEVER PIN 9/16" O.D.	**77326**												
	1P 77326 A									U	V	W	
SEAL – FRONT CLUTCH CYLINDER – INNER OIL 1-5/16" I.D. – square cut lip	**7C328**												
	B1AZ 7C328 B									U	V	W	
LEVER – FRONT BAND SERVO ACTUATING	**7330**												
	ARC6DZ 7330 A	M	N	O	P	Q	R						
Stamped C8AP 7A054 A	C8AZ 7330 A									U	V	W	
GEAR ASSY. – FORWARD SUN	**7A348**												
	XY 7A348 A	M	N	O	P	Q	R						
PIN – BAND ACTUATING LEVER SHAFT	**77356**												
	1P 77356 A									U	V	W	
CYLINDER ASSY. – CLUTCH	**7A360**												
	XW 7A360 A	M	N	O	P	Q	R						
	D1AZ 7A360 B									U	V		
	D2AZ 7A360 C											W	
Seal – clutch piston & cyl. 1-1/8" x 15/16" x 3/32"	116554 ES	M	N	O	P	Q	R						
ROLLER – PLANETARY CLUTCH	**7C366**												
	C3AZ 7C366 A										16	16	
SNAP RING – FRONT BAND SERVO PISTON SLEEVE TO SERVO	**77366**												
	ARC6DZ 77366 A	M	N	O	P	Q	R						
2½" dia. – 0.044" thick	1P 77366 A									U		W	
2¾" dia. – 0.044" thick – O.N.R.	B6S 77366 A										V		
Not serviced	357912 S									2		2	
WASHER – OUTPUT SHAFT THRUST REAR	**7B368**												
	211E 7B368	M	N	O	P	Q	R						
2-13/16" I.D. x 3" O.D. – includes rollers	C8AZ 7B368 A									U	V	W	
SPRING – REAR BAND SERVO ACCUMULATOR 9/16" large O.D. – ¼" small O.D. – 9/16" long	**77369**												
	B8A 77369 A									U	V	W	
DIAPHRAGM ASSY. – VACUUM THROTTLE VALVE	**7A377**												
Yellow or light blue band	TM 1									U	V	W	
TUBE – FRONT BAND SERVO OIL (REFER ALSO 7D469)	**77379**												
	ARC6DZ 77379 A	M	N	O	P	Q	R						
3-11/16" long – 5/16" O.D. – straight	B5A 77379 A									U	V	W	
ROD – THROTTLE CONTROL VALVE 2-7/8" long – 1/8" dia.	**7A380**												
	C2AZ 7A380 A									U	V	W	

DESCRIPTION	PART NUMBER	AUTOMATIC TRANSMISSION ASSEMBLIES PARTS LIST "M TO X"											
		M	N	O	P	Q	R	S	T	U	V	W	X
SUPPORT ASSY. – REAR	**7A383**												
	C8AZ 7A383 B									U	V	W	
WASHER – OUTPUT SHAFT FRONT THRUST SELECTIVE FIT	**7A385**												
2-7/8" O.D. – 1-5/8" I.D. – 0.061" thick	C5AZ 7A385 E									U	V	W	
2-7/8" O.D. – 1-5/8" I.D. – 0.068" thick	C5AZ 7A385 F									U	V	W	
2-7/8" O.D. – 1-5/8" I.D. – 0.075" thick	C5AZ 7A385 G									U	V	W	
2-7/8" O.D. – 1-5/8" I.D. – 0.085" thick	C5AZ 7A385 H									U	V	W	
RACE – OUTPUT SHAFT BEARING	**7A387**												
2-15/16" O.D. – 2-3/16" I.D. – 3 slots on I.D.	C8AZ 7A387 A									U	V	W	
SCREEN – MAIN CONTROL	**7E387**												
Thimble shaped	D30Z 7E387 A											W	
VALVE – MAIN VALVE BODY MANUAL CONTROL	**7C389**												
	C7AZ 7C389 A									U	V	W	
PLATE – MAIN CONTROL UPPER VALVE BODY – REAR	**7A393**												
	C1SP 7A393 A									U	V	W	
SPRING – MANUAL VALVE BIAS	**7K393**												
	E521 GA 2	M	N	O	P	Q	R						
LEVER ASSY. – DOWNSHIFT CONTROL – OUTER	**7A394**												
	D00Z 7A394 A									U	V		
	XA 7A394 A											W	
PLATE – CONTROL UPPER VALVE BODY FRONT	**7A396**												
	C1AP 7A396 A									U	V	W	
PLANETARY GEAR AND DRUM ASSY.	**7A398**												
	ARC6DZ 7A398 A	M	N	O	P	Q	R						
	D1AZ 7A398 B									U		W	
	C8AZ 7A398 A										V		
GEAR ASSY. – PRIMARY SUN	**7A399**												
30-20 teeth – 10-11/32" long	D0AZ 7A399 A									U	V		
30-20 teeth – 10-11/32" long to 1/74	D0AZ 7A399 A											W	
Blue dye at end of shaft – from 1/74	D3AZ 7A399 A											W	
SEAL – FRONT CLUTCH PISTON – INNER (REFER 7A294)	**7D404**												
BEARING – REAR SERVO LEVER	**77406**												
1/16" O.D. – 15/16" long	B5A 77406 A									29	29	29	
Washer – 7/32" I.D. – ½" O.D. bearing retainer – O.N.R.	353592 S									2	2	2	
SPRING – REAR BAND SERVO PISTON	**77415**												
	ARC5DP 77415 A	M	N	O	P	Q	R						
PIN – PARKING PAWL TOGGLE LINK TO PAWL (REFER ALSO 77318)	**7E415**												
	D1AZ 7E415 A									U	V		

DESCRIPTION	PART NUMBER	AUTOMATIC TRANSMISSION ASSEMBLIES PARTS LIST "M TO X"											
		M	N	O	P	Q	R	S	T	U	V	W	X
SPRING – PARKING PAWL TOGGLE RETURN (REFER ALSO 77314)													
	7E416												
	D1AZ 7E416 A									U	V	W	
SNAP RING – REAR BAND SERVO PISTON	**77417**												
3-7/16" dia. x 1/16" thick	B8A 77417 A									U	V	W	
BOLT – SERVO BODY TO CASE	**77420**												
7/16" – 14 x 2½" – pilot end	B7A 77420 A									U	V	W	
OIL SEAL – REAR BAND SERVO PISTON	**7423**												
3-1/8" O.D. – square cut lip	C8AZ 7423 A									U	V	W	
GASKET – THROTTLE CONTROL VALVE	**7B426**												
From 1/74	C1AP 7B426 A											W	
PLATE – REAR CLUTCH PRESSURE	**7B437**												
54 teeth – 3-7/8" I.D. x 5/16" thick	B8SZ 7B437 A									U	V	W	
PAWL ASSY. – PARKING	**7A441**												
	211E 7A441	M	N	O	P	Q	R						
	B4AZ 7A441 A									U	V	W	
PLATE – CLUTCH – EXTERNAL SPLINES – STEEL	**7B442**												
	XP 7B442 A	3	4	3	4	3	4						
	XP 7B442 B	5	5	5	5	5	5						
Front & rear clutch	C8AZ 7B442 A									8	8	8	
RACE – OVERRUNNING CLUTCH – OUTER	**7B456**												
	E627 GA 2	M	N	O	P	Q	R						
ROLLER – REAR CLUTCH SUN GEAR FRONT BEARING	**7C458**												
13/32" long – pointed ends	C2AZ 7C458 A									34	34	34	
13/32" long – blunt ends	B1A 77507 E									34	34	34	
TUBE – FRONT BAND SERVO OIL (REFER ALSO 77379)	**7D469**												
	E531 GA 2	M	N	O	P	Q	R						
	E578 GA 2	M	N										
O.A. length – 11-7/16" – 5/16" O.D.	C8AZ 7D469 A									U	V	W	
TUBE – MAIN OIL PRESSURE	**77469**												
5-9/16" long	B5A 77469 A									U	V	W	
SPACER – OIL PRESSURE REGULATOR VALVE	**7470**												
9/16" O.D. – 13/16" long	B5A 7470 A									U	V	W	
LEVER – PARKING PAWL TORSTION SPRING	**7B470**												
	XW 7B470 A	M	N	O	P	Q	R						
Washer – parking pawl torsion opening lever – O.N.R.	113368 ES	M	N	O	P	Q	R						
Spring retaining	V 387781 S	3	3	3	3	3	3						
SPRING – REAR BAND SERVO PISTON	**7D474**												
	E570 GA 2	M	N	O	P	Q	R						
3-3/16" large dia. – 1¾" small dia. – 2¾" long	C90Z 7D474 A									U	V	W	

DESCRIPTION	PART NUMBER	AUTOMATIC TRANSMISSION ASSEMBLIES PARTS LIST "M TO X"											
		M	N	O	P	Q	R	S	T	U	V	W	X
SCREW – REAR SERVO	**7D477**												
	E602 GA 2	M	N	O	P	Q	R						
Washer	34807 S8	M	N	O	P	Q	R						
Bolt 3/8" – 16 x 1½"	20468 S7	M	N	O	P	Q	R						
SPRING – CLUTCH PISTON	**7A480**												
Rear clutch	B1AZ 7A480 A									U	V	W	
BEARING ASSY. – REAR CLUTCH SUN GEAR FRONT (REFER ALSO 7C458)	**7D480**												
	E623 GA 2	M	N	O	P	Q	R						
1-5/16" O.D. x ½" long – includes needle rollers	C8AZ 7D480 A									U	V	W	
"O" ring	116556 ES	M	N	O	P	Q	R						
Key woodruff	74178 S									U		W	
SNAP RING – CLUTCH PRESSURE PLATE RETAINER	**7D483**												
Governor	E547 GA 2	M	N	O	P	Q	R						
Rear clutch	E547 GA 2	M	N	O	P	Q	R						
0.060" thick – 5-9/16" O.D. – rear	C8AZ 7D483 C									U	V	W	
0.078" thick – 5-9/16" O.D. – front & rear	C7AZ 7D483 A									2	2	2	
0.090" thick – 5-9/16" O.D. – rear	C8AZ 7D483 B									U	V	W	
0.102" thick – 5-9/16" O.D. – rear	C8AZ 7D483 A									U	V	W	
WASHER – FRONT CLUTCH SUN GEAR THRUST	**7D484**												
1¼" I.D. x 1-27/32" O.D.	D0AZ 7D484 A									U	V	W	
LINK – PARKING PAWL TOGGLE OPERATING LEVER	**7C495**												
	E581 GA 2	M	N	O	P	Q	R						
OIL SEAL – MANUAL CONTROL LEVER	**7B498**												
	E613 GA 2	3	3	3	3	3	3						
	C7AZ 7B498 A									U	V	W	
Nut – ½" – 20 light hex.	33943 S8									U	V	W	
ROLLER – REAR CLUTCH SUN GEAR FRONT BEARING (REFER 7C458)	**77507**												
SEAT – REAR CLUTCH PISTON SPRING	**77516**												
1-11/16" I.D. x 2-7/8" O.D. x 5/16" wide	1P 77516 B									U	V	W	
SNAP RING – REAR CLUTCH PISTON SPRING	**77517**												
1½" I.D.	1P 77517 A									U	V	W	
WASHER – SECONDARY SUN GEAR THRUST INNER	**77524**												
1-11/16" I.D. x 2-3/8" O.D. x 1/8" thick	1P 77524 A									U	V	W	
RETAINER – CLUTCH PISTON SPRING	**7A527**												
Seat	E560 GA 2	M	N	O	P	Q	R						
WASHER – FRONT CLUTCH HUB THRUST	**7A533**												
Hub thrust	E515 GA 2	M	N	O	P	Q	R						
Locking plate	E621 GA 2	M	N	O	P	Q	R						
RING – FRONT CLUTCH OIL SEAL (REFER ALSO 7C169)	**77542**												
	ARC5DP 77542 A	M	N	O	P	Q	R						
RING – FRONT CLUTCH OIL SEAL – REAR (REFER 7C169)	**77543**												

DESCRIPTION	PART NUMBER	AUTOMATIC TRANSMISSION ASSEMBLIES PARTS LIST "M TO X"											
		M	N	O	P	Q	R	S	T	U	V	W	X
WASHER – FRONT CLUTCH SUN GEAR THRUST – FRONT													
	77545												
	1P 77545 A									U		W	
OIL SEAL – CLUTCH PISTON – OUTER	**7A548**												
	E598 GA 2	M	N	O	P	Q	R						
Forward	C9AZ 7A548 A										V		
4-3/16" I.D. x 4-5/8" O.D.	D1AZ 7A548 A									U		W	
RACE – FRONT CLUTCH SUN GEAR THRUST REAR	**77549**												
2" O.D. – 1¼" I.D.	B8A 77549 A									U	V	W	
KIT – REAR CLUTCH PLATE	**7B550**												
	ARC5DZ 7B550 A	M	N										
RING – FRONT CLUTCH PISTON SPRING PRESSURE	**77563**												
3-1/16" dia.	B5A 77563 A									U	V	W	
SNAP RING – REAR CLUTCH CYLINDER	**77567**												
5-9/16" O.D.	1P 77567 A									U	V	W	
WASHER – FRONT CYLINDER HUB THRUST	**77577**												
7/8" I.D. – 1-11/16" O.D.	B5S 77577 B									U	V	W	
RING – SNAP – FRONT & REAR CLUTCH PLATE RETAINING	**7A577**												
Front clutch	E548 GA 2	M	N	O	P	Q	R						
Rear clutch	E548 GA 2	M	N	O	P	Q	R						
Rear drum	E548 GA 2	M	N	O	P	Q	R						
PLUNGER – MAIN VALVE DETENT	**77607**												
5/16" O.D. x 11/16" long	B8A 77607 A									U	V	W	
DRUM & SECONDARY SUN GEAR – FRONT BRAKE	**7A626**												
To 6/73	XY 7A626 A	M	N	O	P								
From 6/73	XA 7A626 A	M	N	O	P								
	XB 7A626 A					Q	R						
27 drum – 36 sun gear teeth – includes bushing & bearing	C8AZ 7A626 A									U	V	W	
VALVE – REAR BAND SERVO CHECK	**77658**												
	B8A 77658									U	V	W	
PLATE – MAIN CONTROL LOWER VALVE BODY COVER SIDE	**7729**												
	B8A 7729 A										V	W	
PLATE – MAIN CONTROL COVER & LOWER VALVE BODY SEPARATOR	**7734**												
	C7AZ 7734 D									U	V	W	
PLATE – MAIN CONTROL VALVE ASSY. SIDE	**77739**												
O.N.R.	B8S 77739 A									U	V	W	
THRUST WASHER – CONVERTOR IMPELLER	**7A812**												
	B6AZ 7A812 A											W	

DESCRIPTION	PART NUMBER	AUTOMATIC TRANSMISSION ASSEMBLIES PARTS LIST "M TO X"											
		M	N	O	P	Q	R	S	T	U	V	W	X
SPRING – CONVERTOR OVERRUNNING	**7A814**												
	B9AZ 7A814 A									8	8	8	
CONVERTOR ASSY.	**7902**												
	XW 7902 C	M	N	O	P	Q	R						
	C9ZZ 7902 A									U	V	W	
Bolt – 3/8" – 24 x ½" – self locking – convertor to drive plate	46025 S	4	4										
HUB – CONVERTOR IMPELLER	**7915**												
	C5AZ 7915 A									U	V	W	
HUB – CONVERTOR TURBINE	**7926**												
	C5TZ 7926 A									U		W	
STATOR – CONVERTOR From 1/74	**7932**												
	C2AZ 7932 B											W	
WASHER – CONVERTOR STATOR REAR & INTERMEDIATE THRUST	**7937**												
3-9/16" O.D. x 2-1/16" I.D. – ½" thick stamped C5AP 7937 A or C7AP 7937 A	C5AZ 7937 E										a/r		
2-25/32" O.D. x 1-5/16" I.D. – 0.070" wide – natural	C6AZ 7937 BMR									U			
2-25/32" O.D. x 1-5/16" I.D. – 0.079" wide – red	C6AZ 7937 CMR									U			
2-25/32" O.D. x 1-5/16" I.D. – 0.087" wide – yellow	C6AZ 7937 DMR									U			
2-25/32" O.D. x 1-5/16" I.D. – 0.096" wide – blue	C6AZ 7937 EMR									U			
	C7AZ 7937 AMR											W	
SNAP RING – CONVERTOR REACTOR – CLUTCH RETAINER	**7945**												
	1P 7945 A									a/r	a/r	a/r	
RACE – CONVERTOR STATOR CLUTCH – INNER	**7946**												
	B9AZ 7946 A									U	V	W	
RACE – CONVERTOR STATOR CLUTCH – OUTER	**7947**												
	C2AZ 7947 C									U	V	W	
COVER ASSY. – CONVERTOR	**7950**												
	C8AZ 7950 A									U	V	W	
STUD – CONVERTOR DRIVE From 1/74	**7964**												
	C4AZ 7964 A											W	
HOUSING ASSY. – CONVERTOR	**7976**												
	XT 7976 A	M	N	O	P	Q	R						
	D0ZZ 7976 A									U	V	W	
Bolt – 5/16" – 18 x 7/8"	112949 ES			6	6	6	6						
COVER – CONVERTOR HOUSING LOWER	**7986**												
	C5AZ 7986 A									U	V	W	
Bolt	20490 S2									U		W	
Washer – not serviced	56319 S4									U		W	
GEAR – SPEEDOMETER DRIVE	**17285**												
8 tooth – yellow	XA 17285 C	M	N	O	P	Q	R						
7 tooth – green – to 9/72	XA 17285 B	M	N										
7 tooth – blue – from 9/72	XA 17285 D	M	N										

MODEL	BODY TYPE	REMARKS	UNIT	PART NUMBER	
– – 7007 – – PLATE – ENGINE REAR COVER					
XA/B, ZF/G	All	6 cyl.	1	XY	7B007 A
XA/B, ZF/G	All	8 cyl.	1	D2TZ	7007 A
– – 7B007 – – PLATE – ENGINE REAR COVER (REFER 7007)					
– – 7C008 – – CLIP – TRANSMISSION OIL TUBE					
XA/B, ZF/G	All	6 cyl. – oil cooler lines to block	1	XY	7C008 A
XA/B, ZF/G	All	250 c.i.d. – with A/C – OSO-G-4012	1	XA	7C008 A
XA/B, ZF/G	All	8 cyl. – oil cooler lines to block	1	XA	7C008 B
– – 7A024 – – ROD – TRANSMISSION TO BELLCRANK LEVER (REFER 7A095)					
– – 7A030 – – TUBE ASSY. – OIL COOLER OIL INLET					
XA/B, ZF/G	All	6 cyl. – B/W trans.	1	XA	7A030 AA
XA/B, ZF/G	All	250 c.i.d. – C4 trans.	1	XA	7A030 EA
XA/B, ZF/G	All	250 c.i.d. – B/W trans. – W/AC – OSO-G-4012	1	XA	7A030 GA
XA/B, ZF/G	All	250 c.i.d. – C4 trans. – W/AC – OSO-G-4012	1	XA	7A030 HA
XA/B, ZF/G	All	8 cyl. 2V	1	XA	7A030 CA
XA/B	54H, 65H	Also OSO-G-6002	1	XA	7A030 DA
XA/B	54H, 65H	W/AC	1	XA	7A030 KA
XA/B, ZF/G	All	Connector – 5/16" – 20 x ½" – inlet tube to radiator	3	87972 S	
– – 7A031 – – TUBE ASSY. – OIL COOLER – OIL OUTLET					
XA/B, ZF/G	All	6 cyl. – B/W trans.	1	XA	7A031 AA
XA/B, ZF/G	All	250 c.i.d. – C4 trans.	1	XA	7A031 EA
XA/B, ZF/G	All	250 c.i.d. – B/W trans. – W/AC – OSO-G-4012	1	XA	7A031 GA
XA/B, ZF/G	All	250 c.i.d. – C4 trans. – W/AC – OSO-G-4012	1	XA	7A031 HA
XA/B, ZF/G	All	8 cyl. 2V	1	XA	7A031 CA
XA/B	54H, 65H	Also OSO-G-6002	1	XA	7A031 DA
XA/B	54H, 65H	W/AC	1	XA	7A031 KA
XA/B, ZF/G	All	Connector – 5/16" – 20 x ½" – outlet tube to radiator	3	87972 S	
– – 7B036 – – WIRING & SOCKET ASSY. – CONTROL SELECTOR INDICATOR					
XA, ZF	All		1	XW	7B036 A
– – 7B071 – – SPRING – CONTROL SELECTOR LEVER RETURN					
XA/B, ZF/G	All		1	C5SZ	7B071 A
– – 7B084 – – TUBE – VACUUM, ENGINE TO TRANSMISSION					
XA/B, ZF/G	All	250 c.i.d.	1	XY	7B084 AA
XA/B, ZF/G	All	8 cyl. 2V	1	XW	7B084 A
– – 7A090 – – BRACKET ASSY. – RELAY SHAFT TO BODY					
XA/B, ZF/G	All	C4 trans. – column shift	1	XA	7A090 A
– – 7A093 – – SPACER – TRANS. TO RELAY SHAFT BRACKET					
XA/B, ZF/G	All	C4 trans. – column shift	1	XW	7A093 A
– – 7K094 – – INSULATOR – GEAR SHIFT RELAY SUPPORT					
XA/B, ZF/G	All	C4 trans. – column shift	2	3004E	7K094 A
– – 7A095 – – ROD – GEAR SHIFT RELAY TO TRANS. CONNECTOR					
XA/B, ZF/G	All	C4 trans. – column shift	1	XW	7A095 B
XA/B, ZF/G	All	Pin – self locking – rod to shaft assy.	2	352358 S7	
XA/B, ZF/G	All	Washer – 3/8" flat – rod to shaft assy.	2	44728 S36	
– – 7A096 – – BRACKET ASSY. – RELAY SHAFT TO TRANS.					
XA/B, ZF/G	All	C4 trans. – column shift	1	XW	7A096 B
– – 7A097 – – SHAFT ASSY. – GEAR SHIFT RELAY					
XA/B, ZF/G	All	250 c.i.d. – C4 trans. – column shift	1	XA	7A097 BA
XA/B, ZF/G	All	8 cyl. – C4 trans. – column shift	1	XA	7A097 AA
– – 7C102 – – SEAL – TRANSMISSION SELECTOR TUBE					
XB, ZG	All	Column shift	1	C8AZ	7C102 A
– – 7A110 – – INDICATOR – TRANSMISSION CONTROL SELECTOR					
XA/B, ZF/G	All	Column shift	1	XB	7A110 A
– – 7A133 – – BUSHING – GEAR SHIFT LEVER SHAFT					
XA/B, ZF/G	All	Floor shift	2	C5ZZ	7A133 A
– – 7B146 – – SPRING – KICKDOWN CONTROL LEVER RETRACTING					
XA/B, ZF/G	All	351 c.i.d.	1	C9AA	7B146 A
XA/B	All	Screw, lever adjusting – 351 c.i.d. 4V	1	379622 S78	

MODEL	BODY TYPE	REMARKS	UNIT	PART NUMBER		
– – 7A185 – – BELLCRANK – SHIFT						
XA/B, ZF/G	All	6 cyl. – column shift	1	XA	7A185	AA
– – 7A186 – – CABLE/ROD ASSY. – KICKDOWN						
XA/B, ZF/G	All	200/250 c.i.d. – B/W trans. – to 11/74	1	XA	7A186	BA
XB, ZG	All	200/250 c.i.d. – B/W trans. – from 11/74	1	XB	7A186	D
XA/B, ZF/G	All	200/250 c.i.d. – C4 trans.	1	C60A	7A186	B
XA/B, ZF/G	All	302 c.i.d. – C4 trans. – to 12/73	1	C60A	7A186	B
XB, ZG	All	302 c.i.d. – C4 trans. – from 1/74 to 10/74	1	XB	7A186	A
XB, ZG	All	302 c.i.d. – C4 trans. – from 10/74	1	XB	7A186	B
XA/B, ZF/G	All	351 c.i.d. – C4 trans. – to 1/75	1	XW	7A186	A
XB,ZG	All	351 c.i.d. 2V – C4 trans. – from 1/75	1	XB	7A186	B
XA/B	All	351 c.i.d. 4V – FMX trans. – to 12/74	1	XW	7A186	B
XB	All	351 c.i.d. 4V – FMX trans. – from 12/74	1	XB	7A186	C*
XA/B, ZF/G	All	200/250 c.i.d. – B/W trans. – seal – cable to case	1	AR 387515 S		
XA/B, ZF/G	All	Washer – 'C' type – cable to trans.	1	97409 S2		
XA/B, ZF/G	All	Trunnion – P/o C60A-7A186-B	1	AB	99753	A
XA/B, ZF/G	All	351 c.i.d. 2V – clip ¼" – cable to carburettor	1	383212 S2		
– – 7200 – – COLUMN ASSY. – STEERING – COLUMN SHIFT (REFER ALSO 3C529)						
XA, ZF	All	B/W trans. – without power steering	1	XA	7200	BP
XA, ZF	All	B/W trans. – with power steering	1	XA	7200	EP
XA, ZF	All	C4 trans. – without power steering	1	XA	7200	CP
XA, ZF	All	C4 trans. – with power steering	1	XA	7200	GP
XB, ZG	All	B/W trans. – without power steering – to 8/74	1	XB	7200	B
XB, ZG	All	B/W trans. – without power steering – from 8/74	1	XB	7200	BB
XB, ZG	All	B/W trans. – with power steering – to 8/74	1	XB	7200	E
XB, ZG	All	B/W trans. – with power steering – from 8/74	1	XB	7200	EE
XB, ZG	All	C4 trans. – without power steering – to 8/74	1	XB	7200	C
XB, ZG	All	C4 trans. – without power steering – from 8/74	1	XB	7200	CC
XB, ZG	All	C4 trans. – with power steering – to 8/74	1	XB	7200	D
XB, ZG	All	C4 trans. – with power steering – from 8/74	1	XB	7200	DD
XB, ZG	All	Screw, socket to tube – ¼" – 20 x 5/16"	a/r	379272 S2		
– – 7202 – – LEVER ASSY. – CONTROL SELECTOR (REFER 7210)						
– – 7E207 – – LEVER ASSY. – ADAPTOR SELECTOR – FLOOR SHIFT						
XA/B, ZF/G	All	B/W trans.	1	XA	7E207	B
XA/B, ZF/G	All	C4 & FMX trans.	1	XA	7E207	D
– – 7210 – – LEVER ASSY. – CONTROL SELECTOR						
XA	54A,B,C, 65B, 66, 71A,B, 78	Column shift – to 12/72	1	XW	7202	B
XA	54D,E,G, 65D, 71D	Column shift – to 12/72	1	XA	7210	C
XA/B, ZF/G	All	Column shift – from 12/72	1	XA	7210	C
XA/B, ZF/G	All	250 c.i.d. – B/W trans. – floor shift	1	XA	7202	BA
XA/B, ZF/G	All	250/302/351 c.i.d. – C4 & FMX trans. – floor shift	1	XA	7202	EA
XA/B, ZF/G	All	Pin – 3/16" x 1.0" roll – column shift – att. lever to selector – not serviced	1	305066 S		
XA/B, ZF/G	All	Bearer – selector lever slide – floor shift with console	2	V 388357		
– – 7212 – – TUBE ASSY. – STEERING COLUMN GEAR SHIFT						
XA, ZF	All		1	XA	7212	B
XB, ZG	All		1	XB	7212	B
– – 7213 – – KNOB ASSY. – STEERING COLUMN GEAR SHIFT LEVER						
XA/B, ZF/G	All		1	XA	7213	B
– – 7213 – – HANDLE ASSY. – GEAR SHIFT LEVER FLOOR						
XA/B, ZF/G	All		1	D30Z	7213	B
XA/B, ZF/G	All	Screw – No. 10 – 32 – ball assy. to lever & housing assy.	2	374949 ES8		
– – 7A213 – – DIAL ASSY. – CONTROL SELECTOR						
XA, ZF	All	Column shift – black	1	XW	7A213	B1A
XA, ZF	All	Column shift – blue	1	XW	7A213	B1B
XA, ZF	All	Column shift – saddle	1	XW	7A213	B1F
XA, ZF	54D,G, 65D, 71D	Column shift – burgundy	1	XW	7A213	B1J
XA/B, ZF/G	All	Floor shift	1	XA	7A213	AA
XB, ZG	All	Column shift	1	XB	7A213	A
– – 7A216 – – INSERT – CONTROL SELECTOR POSITION – COLUMN SHIFT						
XA/B, ZF/G	All	C4 trans.	1	XT	7A216	A
XA/B, ZF/G	All	B/W trans.	1	XW	7A216	A

MODEL	BODY TYPE	REMARKS	UNIT	PART NUMBER		
– – 7228 – – SOCKET – GEAR SHIFT LEVER – COLUMN SHIFT						
XA, ZF	All		1	XW	7228	A
XB, ZG	All		1	XB	7228	B
– – 7B233 – – PLATE – GEAR SHIFT LEVER OPENING – FLOOR SHIFT						
XA, ZF	All		1	XA	7B233	AA
XB, ZG	All		1	XB	7B233	A
– – 7D246 – – CABLE ASSY. – CONTROL SELECTOR LINKAGE – FLOOR SHIFT						
XA/B, ZF/G	All		1	C5ZZ	7D246	A
– – 7A248 – – CAM SWITCH – INHIBITOR						
XA	54H, 65H	To 10/72	1	XA	7A248	A
XA/B	54H, 65H	From 10/72	1	XA	7A248	BA
– – 7A257 – – LEVER – MANUAL CONTROL						
XA/B, ZF/G	All	6 cyl. – B/Warner – column shift	1	XW	7A257	A
XA/B, ZF/G	All	6 cyl. – B/Warner – floor shift	1	XW	7A257	B
XA/B, ZF/G	All	6 cyl. – B/Warner – washer 5/16" – lever to trans.	1	44724 S8		
– – 7E285 – – SHIELD – CONTROL SELECTOR INDICATOR LAMP – COLUMN SHIFT						
XA, ZF	All		1	C90Z	7E285	A
XB, ZG	All	B/w trans. – without power steering	1	XA	7E285	A
XB, ZG	All	B/w trans. – with power steering – C4 trans.	1	XB	7E285	A
XB, ZG	All	Screw – 10 – 16 x ½" – column shift shield to column	2	52607 ES8		
– – 7C300 – – SPRING – REVERSE LOCKOUT RUN – FLOOR SHIFT						
XA/B, ZF/G	All		1	C5ZZ	7C300	A
– – 7302 – – ARM ASSY. – GEAR SHIFT – FLOOR SHIFT						
XA/B, ZF/G	All exc. 54H, 65H		1	XA	7302	B
XA/B	54H, 65H		1	XA	7302	A
– – 7A306 – – HOUSING ASSY. – CONTROL SELECTOR – FLOOR SHIFT						
XA, ZF	All exc. 54H, 65H	Borg Warner trans. – to 12/72	1	XA	7A306	DA
XA/B, ZF/G	All exc. 54H, 65H	Borg Warner trans. – from 12/72	1	XA	7A306	D
XA/B, ZF/G	All exc. 54H, 65H	C4 trans.	1	XA	7A306	BA
XA	54H, 65H	To 12/72	1	XA	7A306	AA
XA/B	54H, 65H	From 12/72	1	XA	7A306	BB
– – 7C325 – – BRACKET ASSY. – SHIFT BELLCRANK – COLUMN SHIFT						
XA, ZF	All	Borg Warner trans. – to 11/73	1	XW	7C325	A
XA/B, ZF/G	All	Borg Warner trans. – from 11/73	1	XA	7C325	A
– – 7326 – – ROD – GEAR SELECTOR						
XA/B, ZF/G	All	6 cyl. – Borg Warner trans. – floor shift – to 2/75	1	XW	7326	J
XB, ZG	All	6 cyl. – Borg Warner trans. – floor shift – from 2/75	1	XB	7326	A*
XA/B, ZF/G	All	C4 trans. – floor shift	1	XW	7326	P
XA/B, ZF/G	All	6 cyl. – Borg Warner – column shift	1	XA	7326	CA
XA/B, ZF/G	All	6 cyl. – C4 trans. – column shift	1	XA	7326	DA
XA/B, ZF/G	All	8 cyl. – C4 trans. – column shift	1	XA	7326	BA
XA/B	54H, 65H	F.M.X. trans.	1	XW	7326	M
XA/B, ZF/G	All	Washer – 5/16" flat – rod to trans.	2	44722 S2		
– – 7D328 – – ROLLER ASSY. – CONTROL SELECTOR LOCK – FLOOR SHIFT						
XA/B, ZF/G	All		1	C5ZZ	7D328	A
– – 7341 – – INSULATOR – GEAR SHIFT ARM – COLUMN SHIFT						
XA/B, ZF/G	All	5/16" I.D. x 11/32" long – B/W trans. – to 5/74	1	C7SZ	7341	A
XB, ZG	All	5/16" I.D. x 5/8" O.D. – B/W trans. – from 5/74 to 12/74	2	D4AZ	7341	A
XB, ZG	All	5/16" I.D. x 5/8" O.D. – B/W trans. – from 12/74	2	D5AZ	7341	A*
XB, ZG	All	5/16" I.D. x 5/8" O.D. – C4 trans. – from 5/74 to 12/74	1	D4AZ	7341	A
XB, ZG	All	5/16" I.D. x 5/8" O.D. – C4 trans. – from 12/74	1	D5AZ	7341	A*
– – 7343 – – BUSHING – GEAR SHIFT ARM INSULATOR – COLUMN SHIFT						
XA/B, ZF/G	All	2 piece type	1	C3TZ	7343	A
XA/B, ZF/G	All	3 piece type	1	C1AZ	7343	A
– – 7347 – – BEARING – CONTROL SELECTOR TUBE						
XA/B, ZF/G	All	1½" I.D. – 5/8" long – split	1	C7ZZ	7347	C
XA/B, ZF/G	All	1-3/16" I.D. – 1½" long – "C" shaped	1	XA	7347	A
XA/B, ZF/G	All	1-3/16" I.D. – 1-5/16" long	1	C8AZ	7347	B

MODEL	BODY TYPE	REMARKS	UNIT	PART NUMBER		
– – 7A347 – – RETAINER – CONTROL SELECTOR LEVER PLUNGER						
XA/B, ZF/G	All		1	C0DF	7A347	A
– – 7D351 – – SEAL ASSY. – CONTROL SELECTOR DIAL – FLOOR SHIFT						
XA/B, ZF/G	All	C4 trans.	1	C5ZZ	7D351	A
– – 7353 – – SLEEVE – GEAR SHIFT CONNECTING ROD ADJUSTING						
XA/B, ZF/G	All	Column shift	1	C1AA	7353	C
XA/B, ZF/G	All	B/Warner – floor shift	1	XW	7353	B
XA/B, ZF/G	All	C4 trans. – floor shift	1	XW	7353	A
XA/B, ZF/G	All	Nut 5/16" – 24 – floor shift – att. sleeve to rod (1) column shift – att. selector arm to rod (7326) (1)	1	55737 S2		
XA/B, ZF/G	All	Washer – 5/16" flat – C4 & FMX trans. – floor shift	2	44722 S2		
XB, ZG	All	Pin – sleeve to arm	1	352358 S7		
XB, ZG	All	Washer – flat 3/8" – insulator to sleeve	2	44727 S2		
– – 7361 – – PLUNGER – CONTROL SELECTOR LEVER – COLUMN SHIFT						
XA, ZF	All		1	C0DF	7361	A
XB, ZG	All		1	XB	7361	A
– – 7C370 – – SEAL – CONTROL SELECTOR HOUSING – FLOOR SHIFT						
XA/B, ZF/G	All		1	XT	7C370	A
– – 7A440 – – BUSHING – CONTROL SHAFT TO TRANS. ROD						
XA, ZF	All	8 cyl.	1	C5ZZ	7A440	A
– – 7C442 – – PAWL ASSY. – CONTROL SELECTOR LOCKING – FLOOR SHIFT						
XA/B, ZF/G	All		1	C5ZZ	7C442	A
– – 7C445 – – SLIDE – CONTROL SELECTOR LEVER – FLOOR SHIFT						
XA/B, ZF/G	All	Inc's V-388386-S grommet – from 12/72	1	XA	7C445	AB
XA, ZF	All	Bearer – nylon – to 12/72	2	V 388357 S		
XA/B, ZF/G	All	Bearer – selector slide – from 12/72	2	V 388355 S2		
XA, ZF	All	Grommet – lever slide	1	V 388345 S		
XA/B, ZF/G	All	Grommet – lever slide	1	V 388386 S		
– – 7C453 – – HOUSING & LEVER ASSY. – CONTROL SELECTOR – FLOOR SHIFT						
XA, ZF	All	Borg Warner trans. – to 12/72	1	XA	7C453	DA
XA/B, ZF/G	All	Borg Warner trans. – from 12/72	1	XA	7C453	DB
XA, ZF	All	C4 trans. – to 12/72	1	XA	7C453	BA
XA/B, ZF/G	All	C4 trans. – from 12/72	1	XA	7C453	BB
XA	54H, 65H	To 12/72 – O.R.C. (1) XA-7C453-BB – XB-7A247-A	1	XA	7C453	AA
XA/B	54H, 65H	From 12/72 to 8/74 – O.R.C. (1) XA-7C453-BB – (1) XB-7A247-A	1	XA	7C453	AC
XB	54H, 65H	From 8/74	1	XA	7C453	BB
– – 7C488 – – BUTTON ASSY. – GEAR SHIFT LEVER RELEASE – FLOOR SHIFT						
XA/B, ZF/G	All	L.H. dummy	1	C8ZZ	7C488	A
XA/B, ZF/G	All	R.H. release	1	C8ZZ	7C488	B
– – 7B976/7 – – BRACE – CONVERTOR HOUSING TO ENGINE						
XA/B, ZF/G	All	Borg Warner trans.	1	XT	7B976	A
XA/B, ZF/G	All	R.H. – C4 trans.	1	XY	7B976	A
XA/B, ZF/G	All	L.H. – C4 trans.	1	XY	7B977	A
XA/B	54H, 65H	R.H. – also OSO-6002	1	XW	7B976	B
XA/B	54H, 65H	L.H. – also OSO-G-6002	1	XW	7B977	A
XA/B	54H, 65H	Bolt – 7/16" – 14 x 1.5" – brace to engine	1	304762 S36		
XA/B	54H, 65H	Washer – 7/16" – brace to engine – not serviced	1	34848 S		
XA/B, ZF/G	All	Bolt – 3/8" – 16 x ¾" – brace to trans. – 6 cyl. 1V	2	20348 S2		
– – 7B978 – – SPACER – BRACE TO ENGINE						
XA/B	54H, 65H	Also OSO-G-6002	1	XW	7B978	A

MODEL	BODY TYPE	REMARKS	UNIT	PART NUMBER

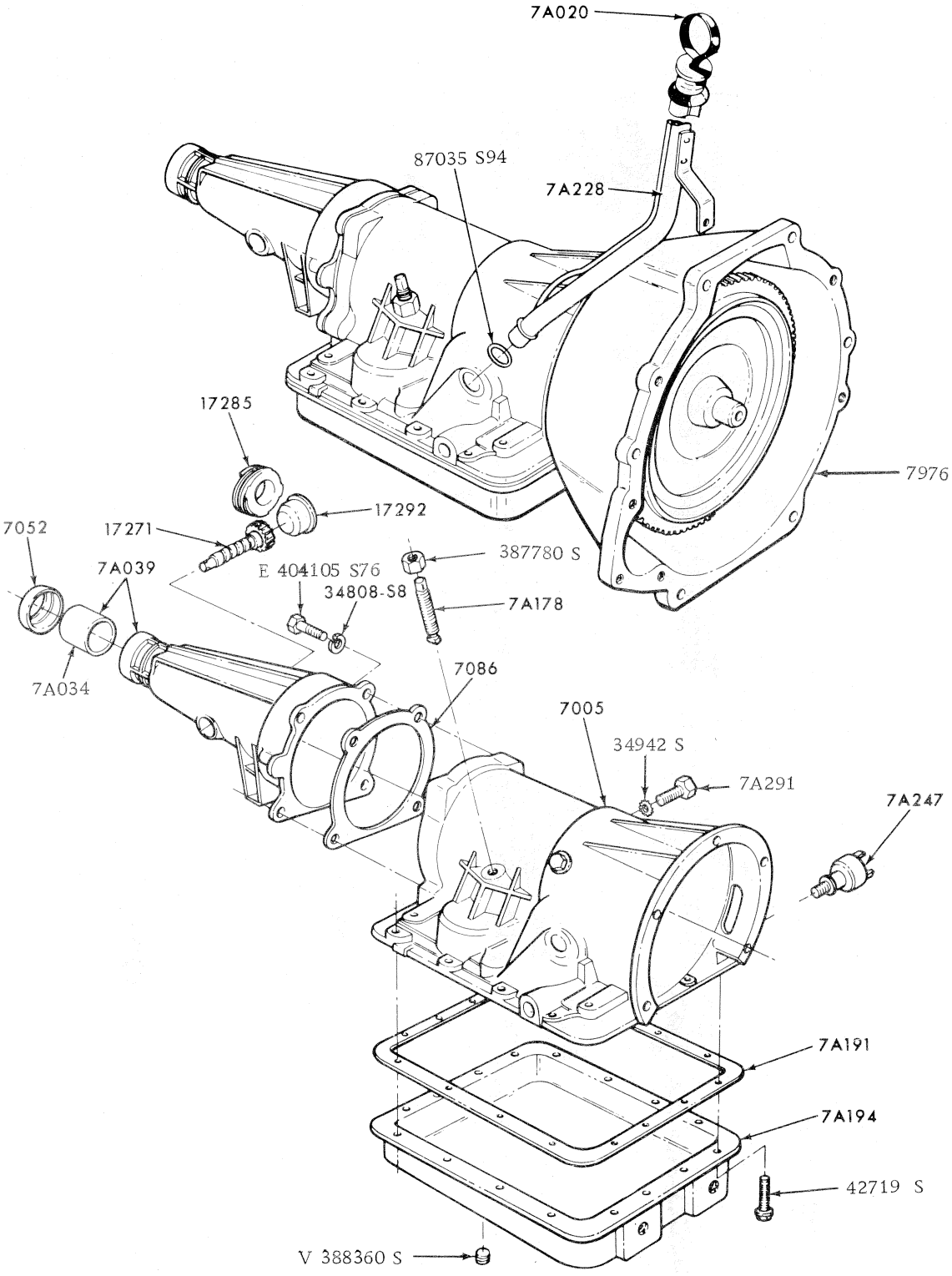

TRANSMISSION CASE, EXTENSION HOUSING & RELATED PARTS – BORG WARNER

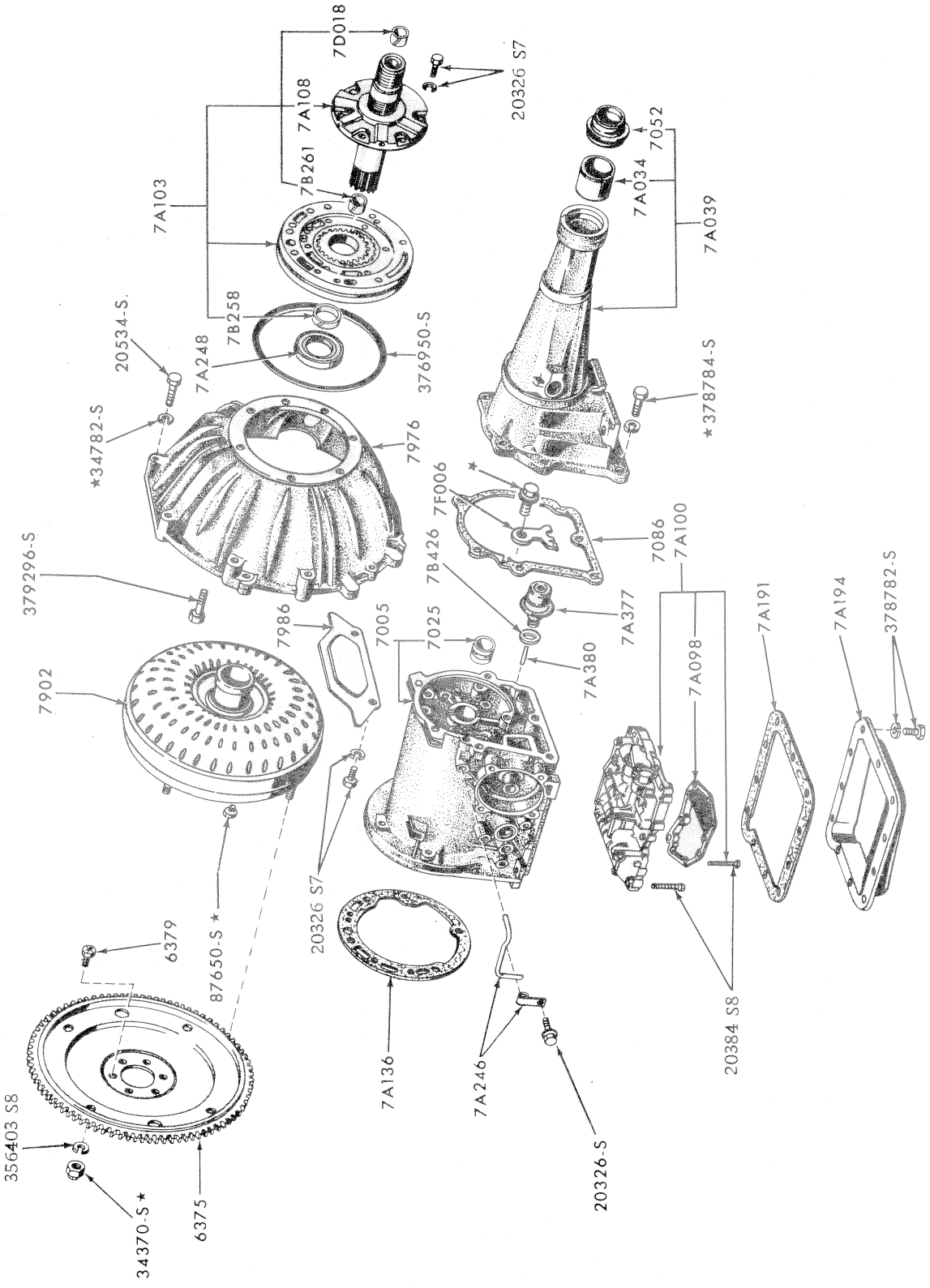

TRANSMISSION CASE, CONVERTOR, EXTENSION HOUSING AND RELATED PARTS – C4 TYPE

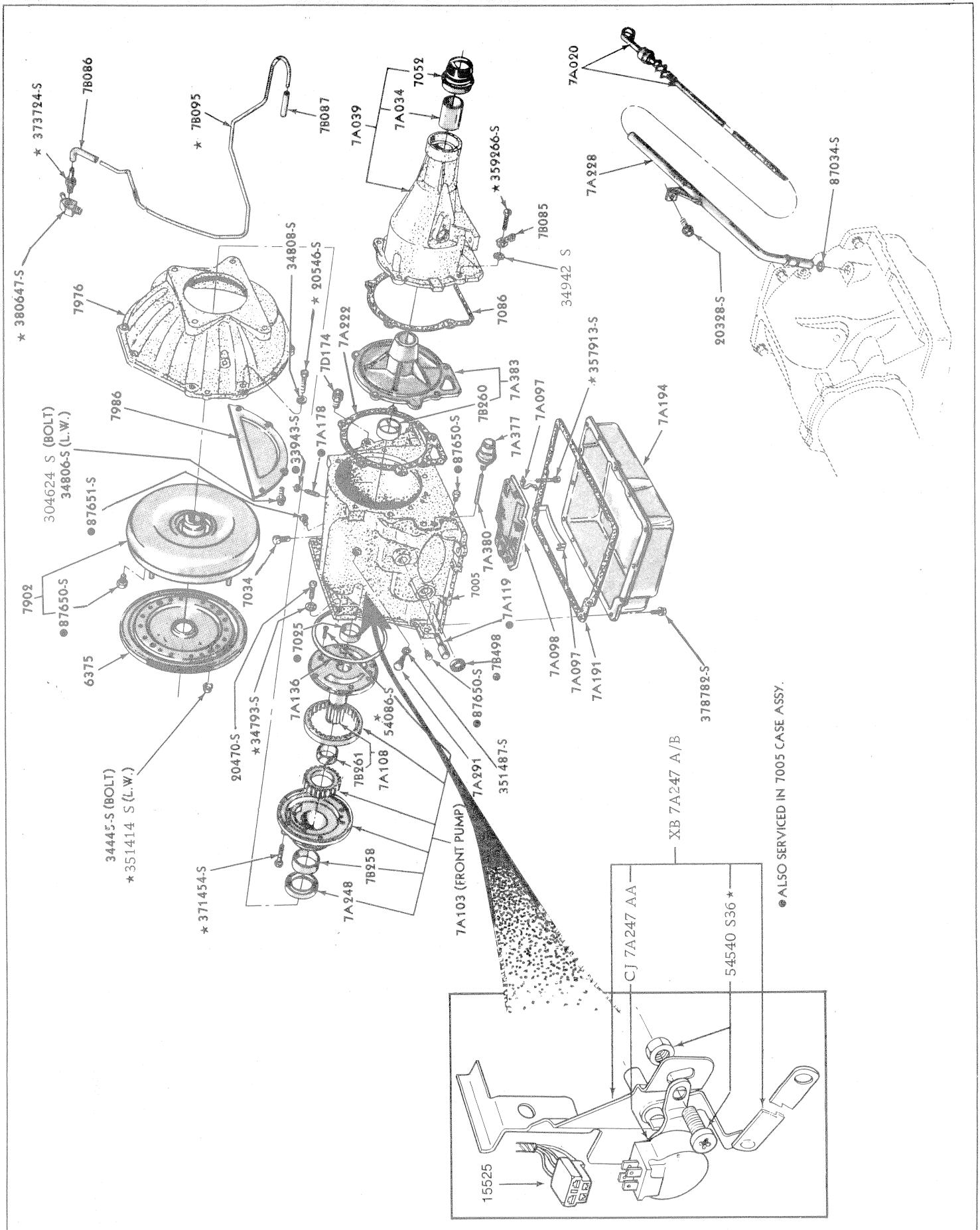

TRANSMISSION CASE, CONVERTOR, PUMP & REAR SUPPORT – F. M. X. TYPE

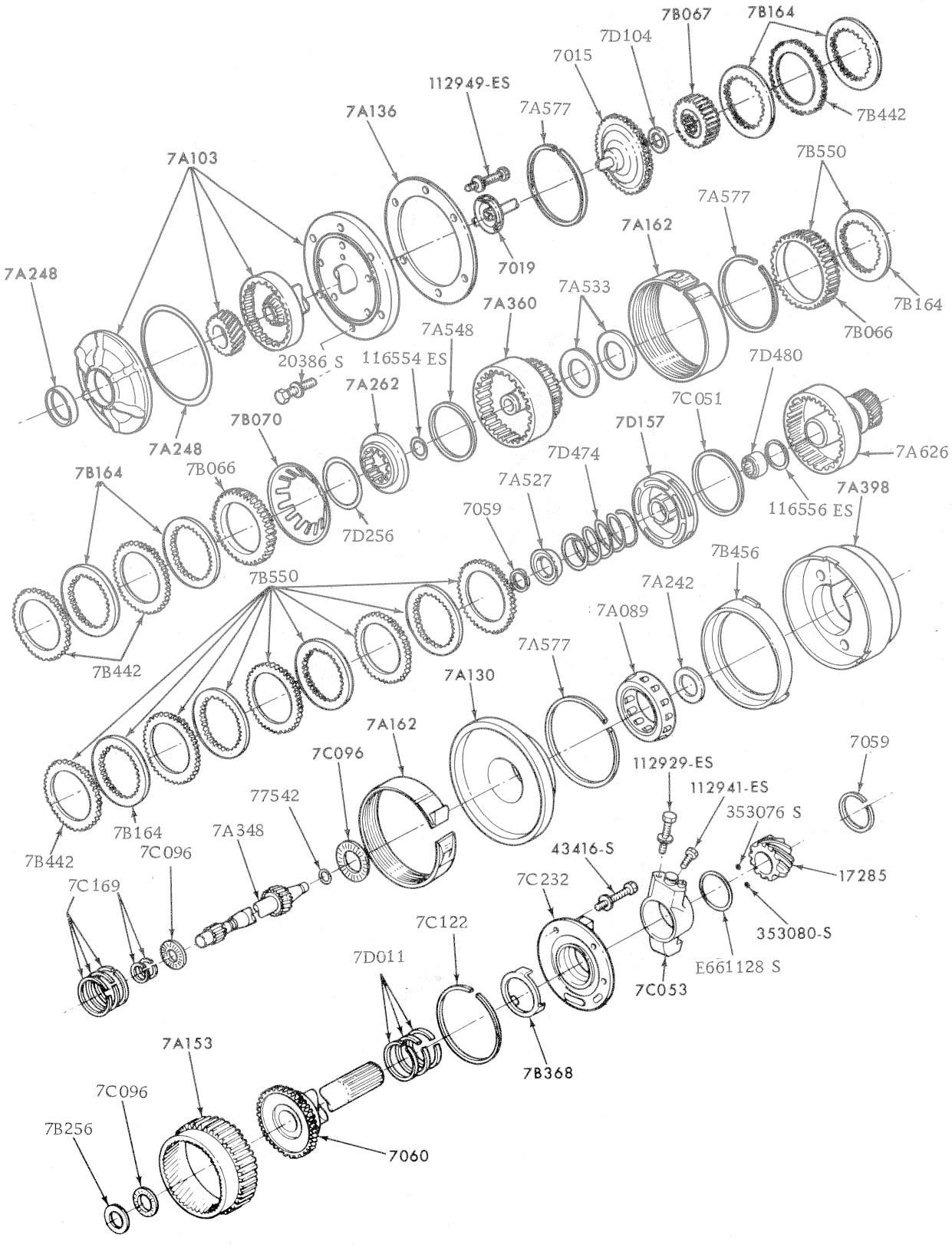

CLUTCHES, GEARS, SHAFTS, EXTENSION & RELATED PARTS BORG WARNER

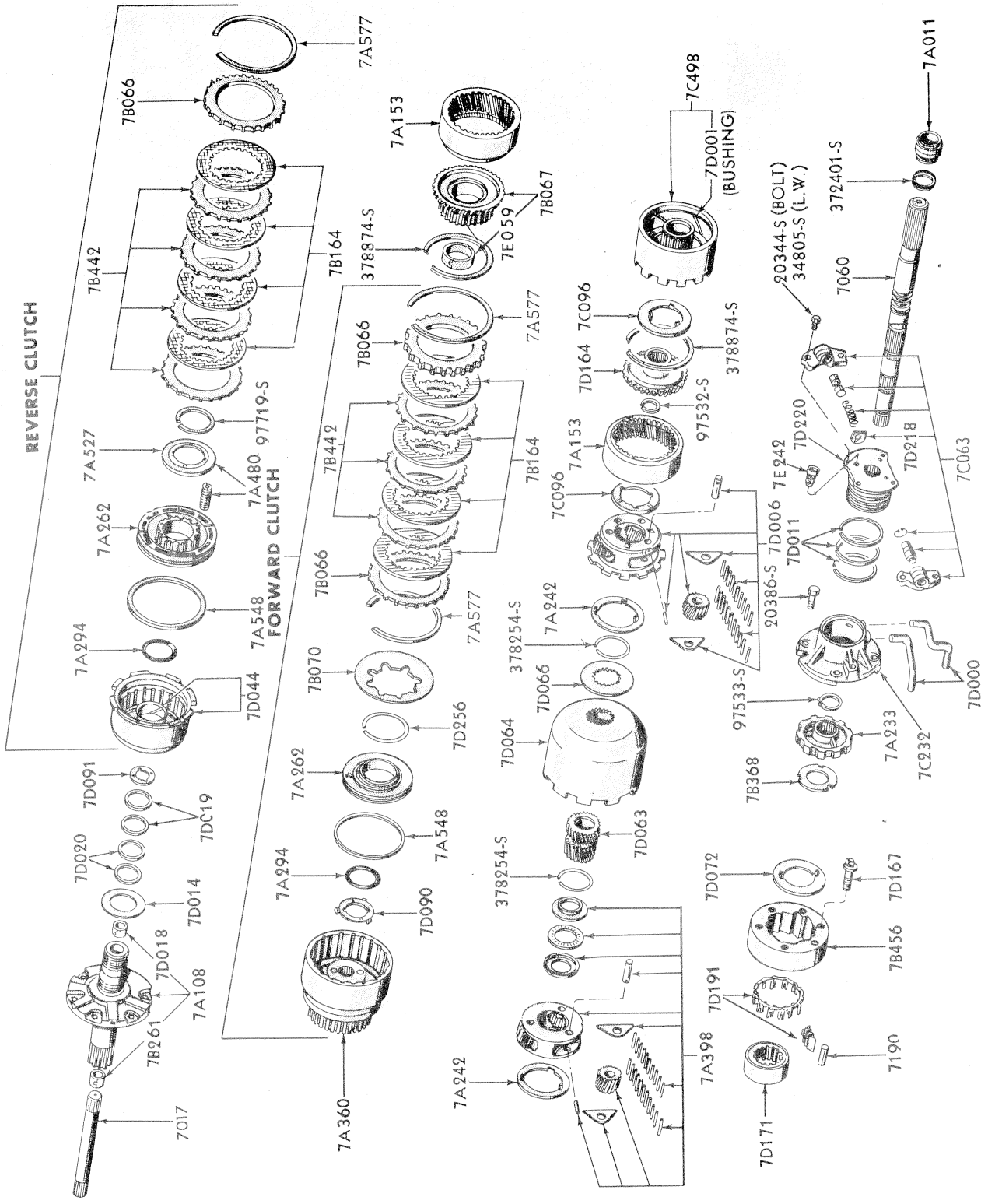

TRANSMISSION INTERIOR – C4 TYPE

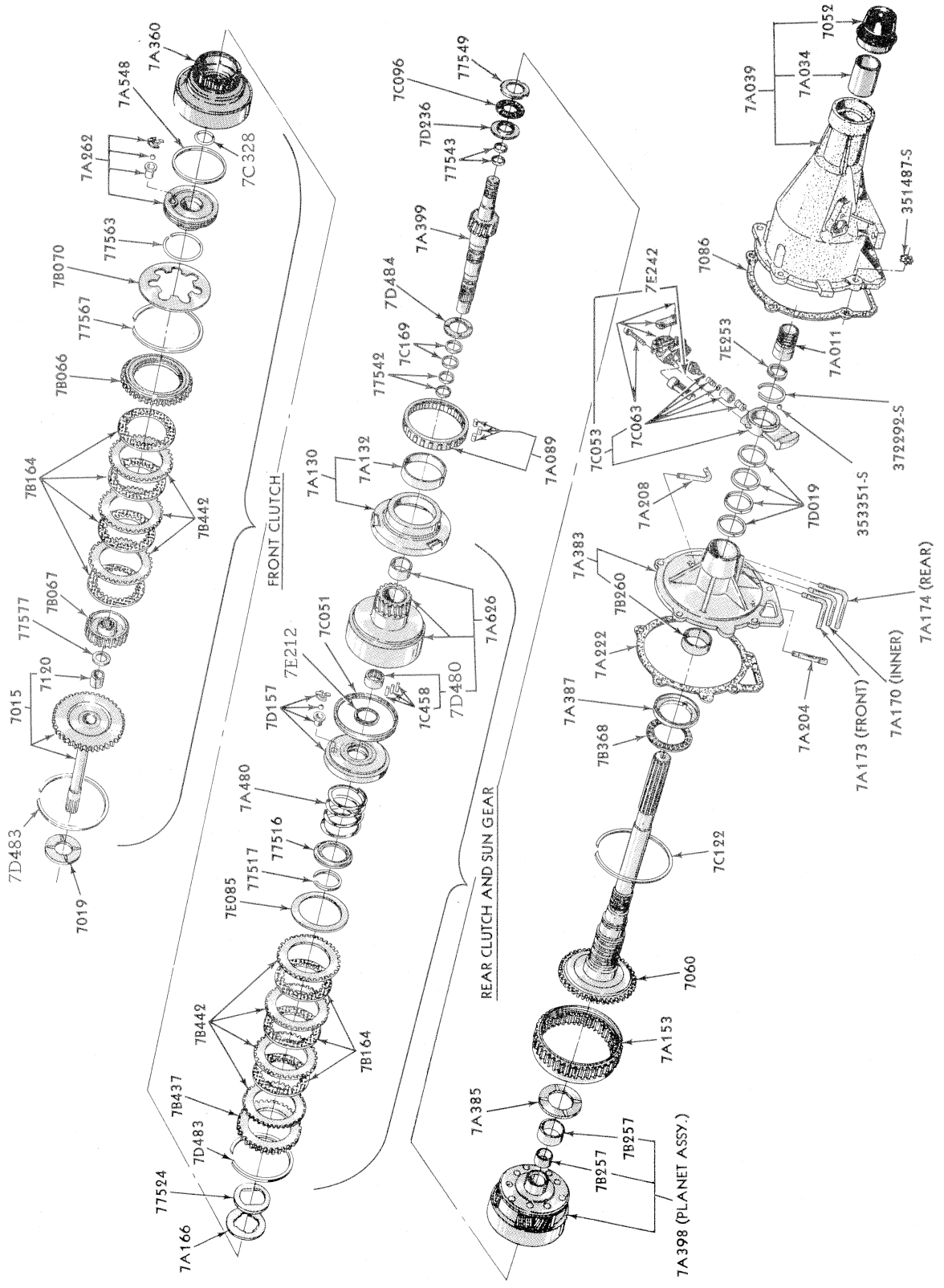

TRANSMISSION INTERIOR – F. M. X. TYPE

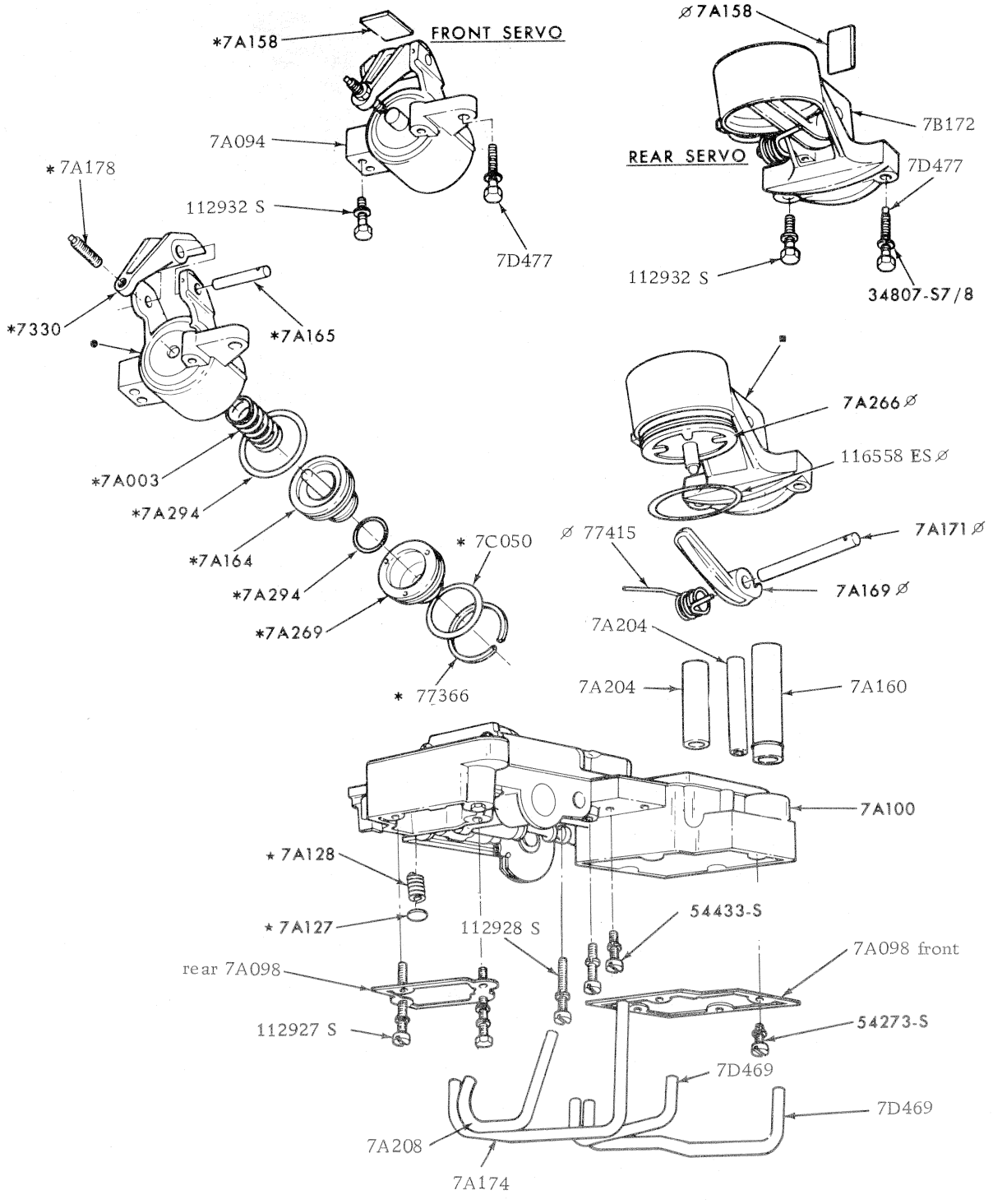

*PART OF 7A094 SERVO ASSY.
•PART OF 7B172 SERVO ASSY.
*ALSO PART OF 7A094 SERVO ASSY.
ØALSO PART OF 7B172 SERVO ASSY.

MAIN CONTROL, FRONT & REAR SERVO BORG WARNER

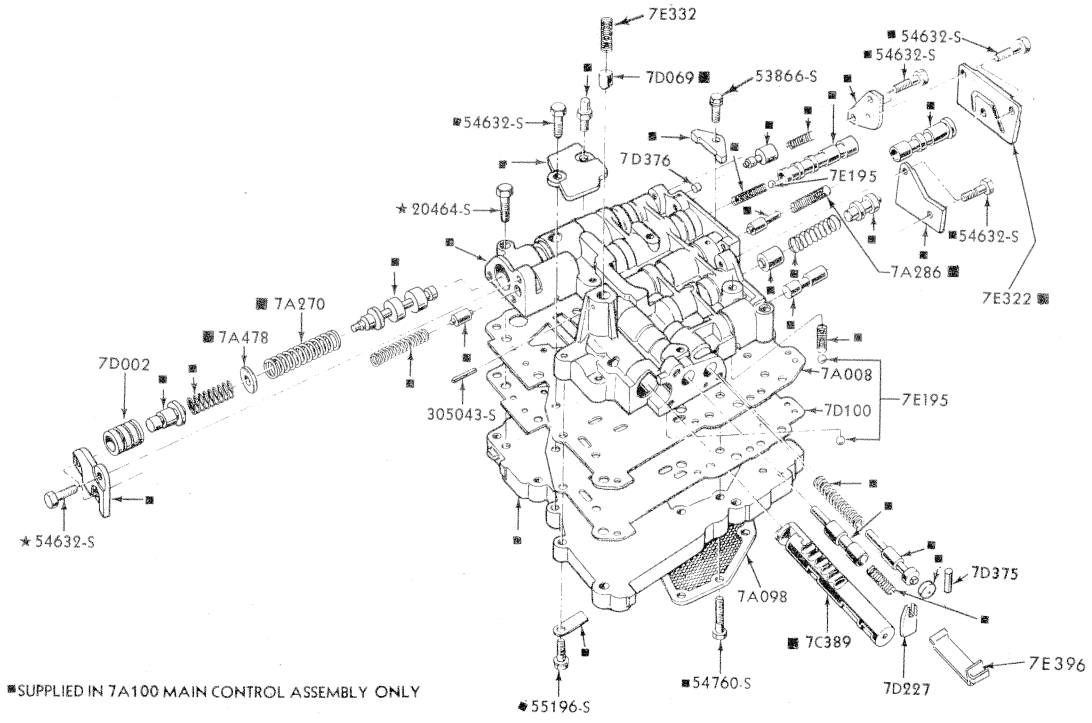

MAIN CONTROL VALVES – C4 TYPE

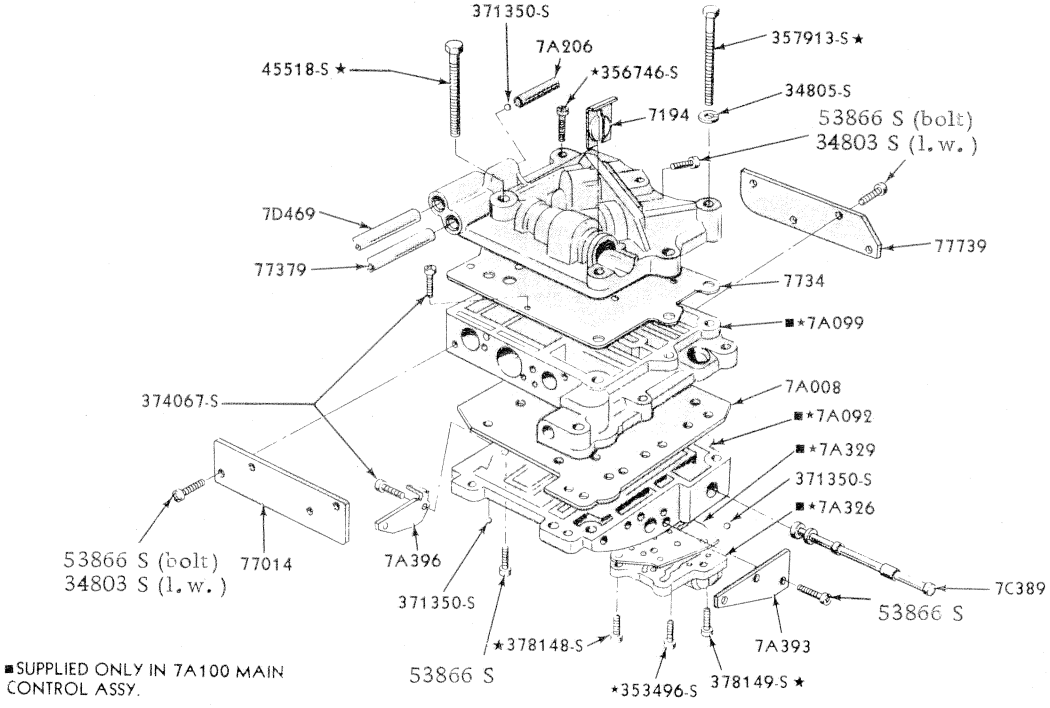

MAIN CONTROL VALVES – F. M. X. TYPE

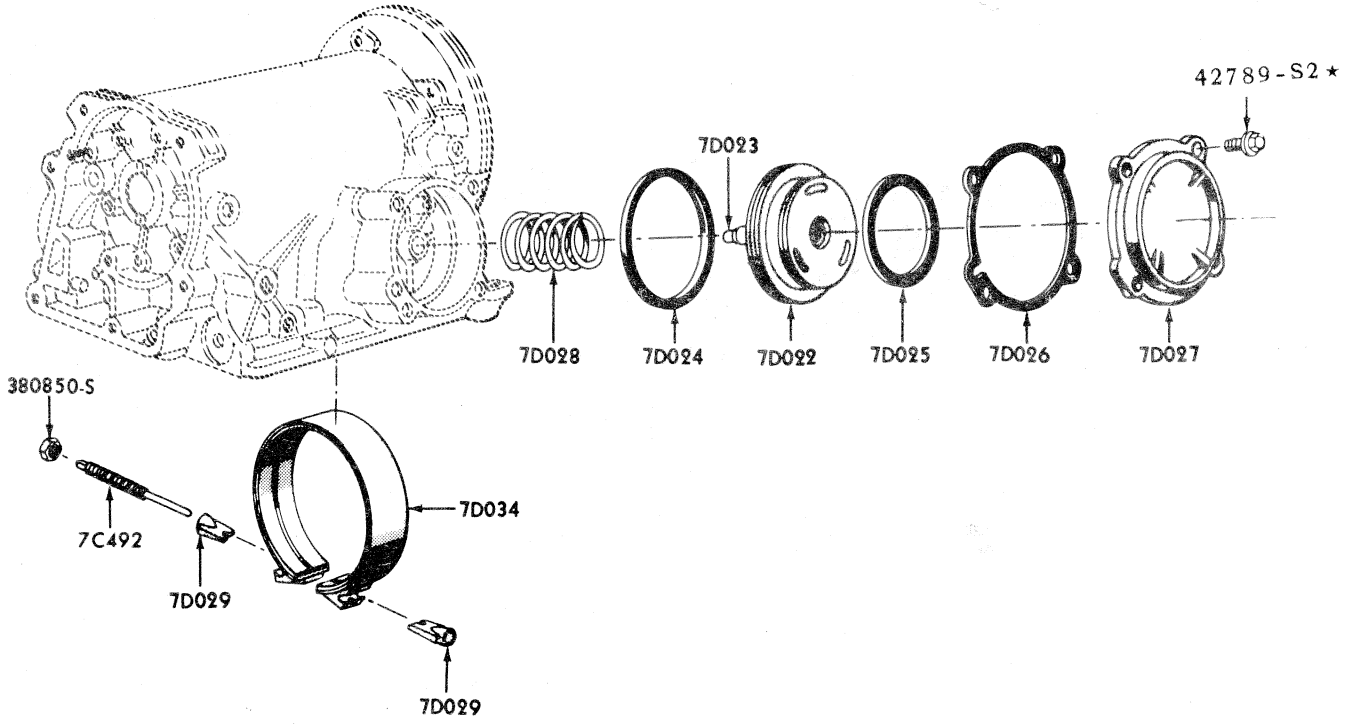

FRONT SERVO AND BAND - C 4 TYPE

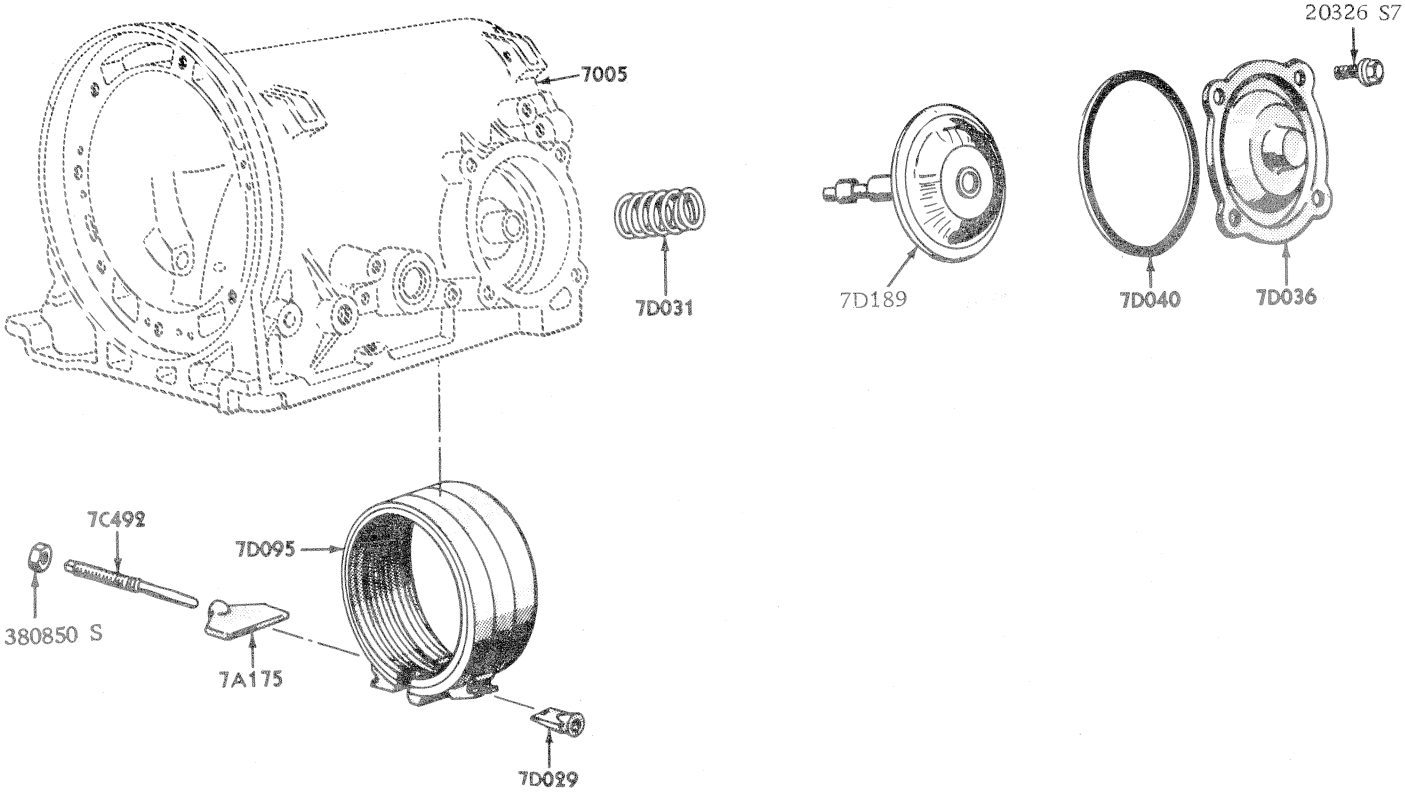

REAR SERVO AND BAND - C 4 TYPE

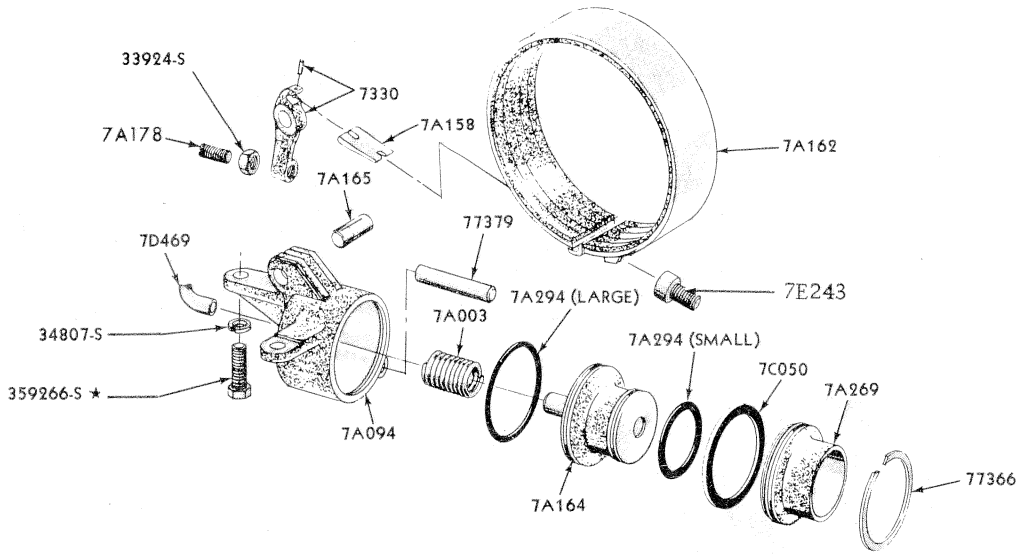

FRONT SERVO AND BAND – F. M. X. TYPE

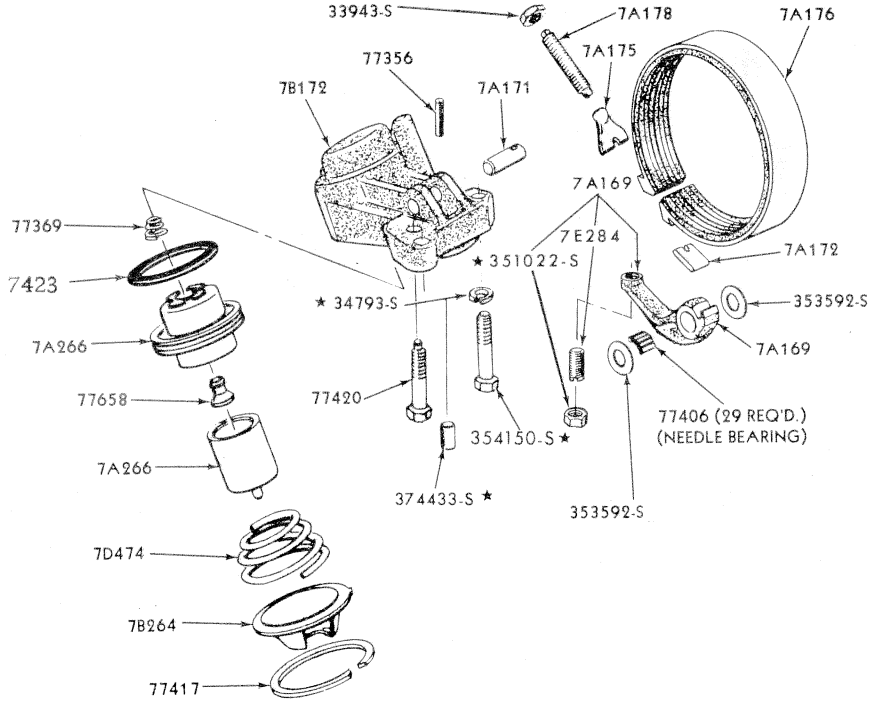

REAR SERVO AND BAND – F. M. X. TYPE

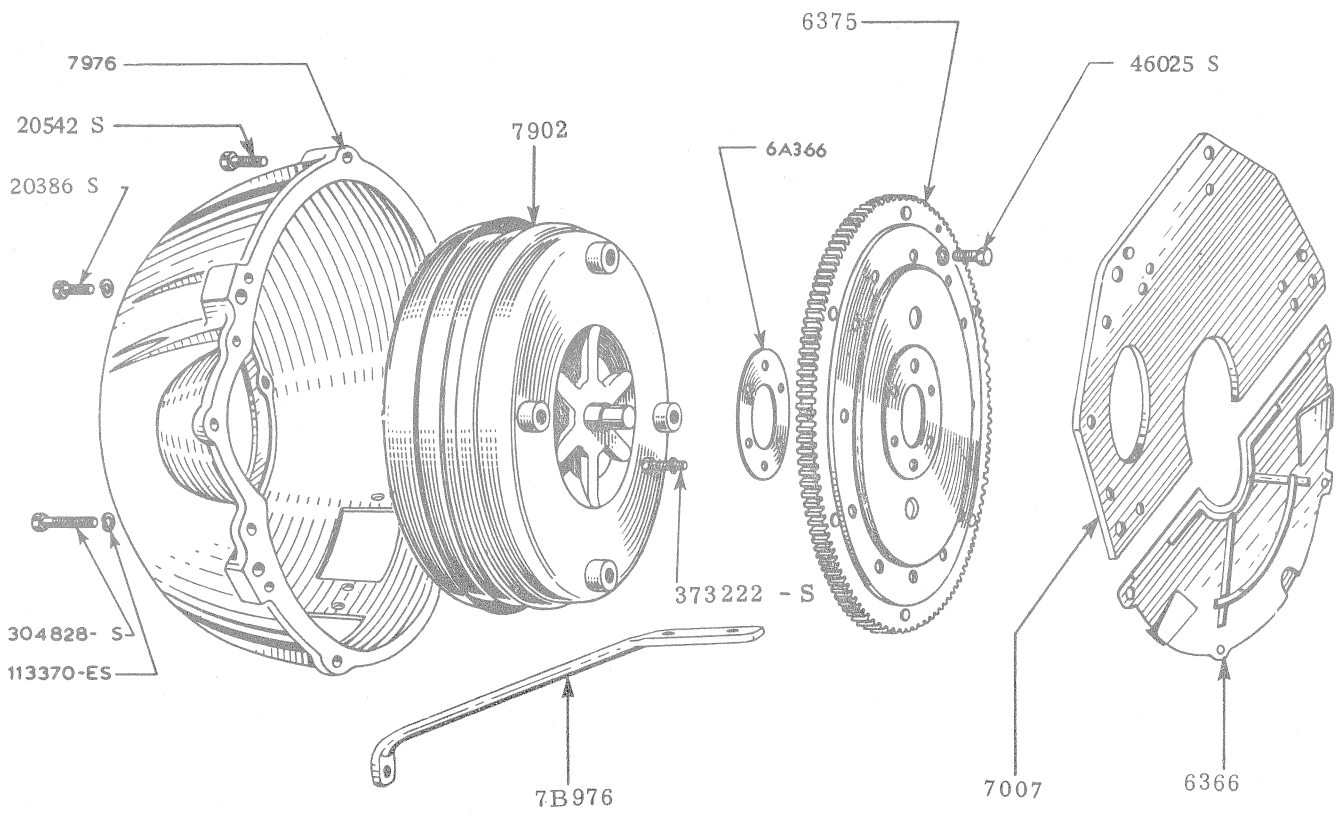

CONVERTOR HOUSING & RELATED PARTS BORG WARNER

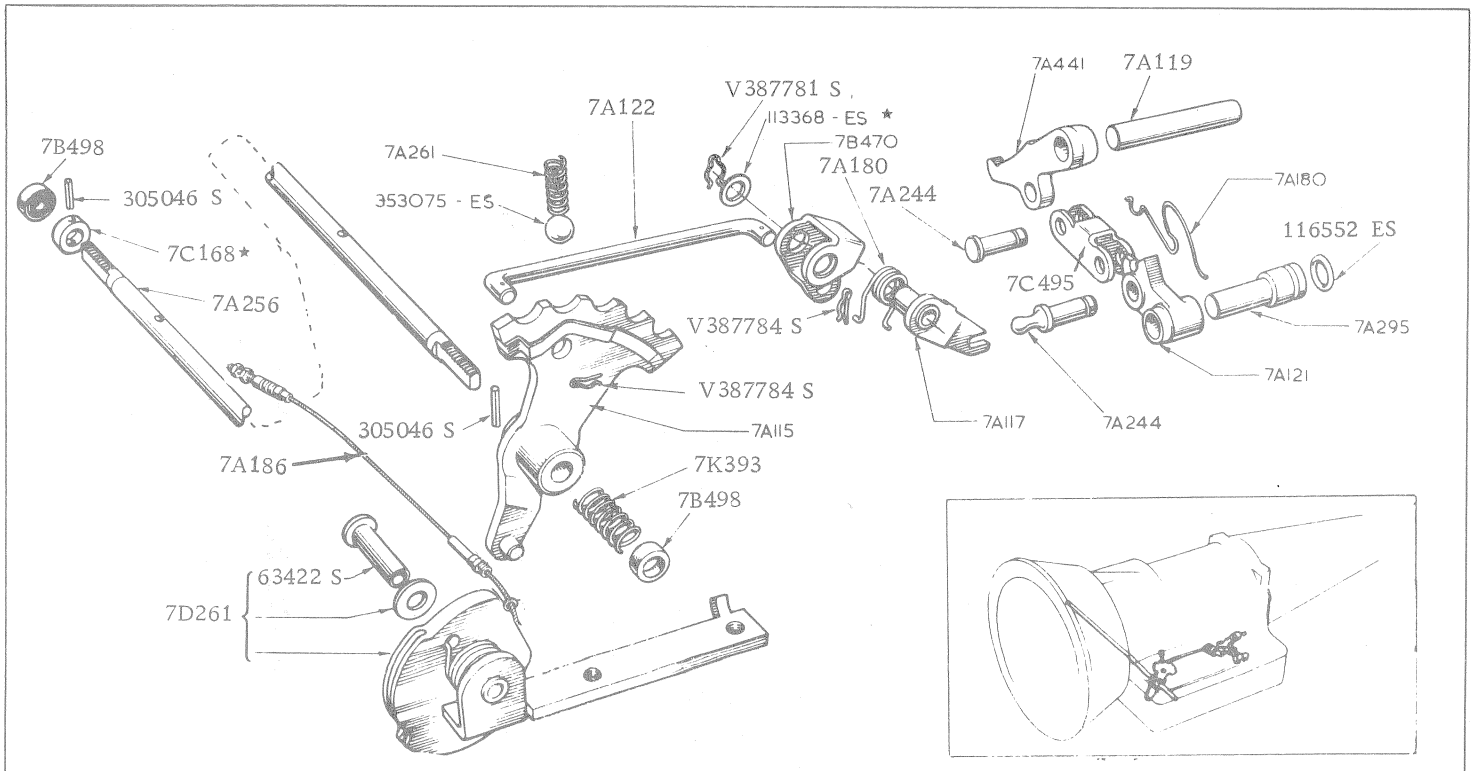

MANUAL CONTROL LINKAGE & PARKING PAWL BORG WARNER

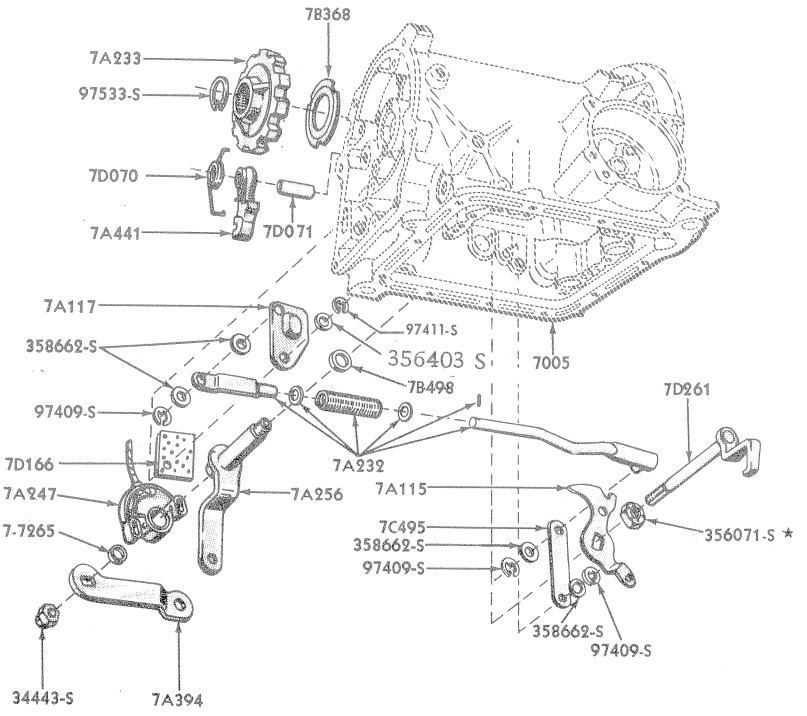

PARKING PAWL, THROTTLE AND MANUAL CONTROL LINKAGE – C4 TYPE

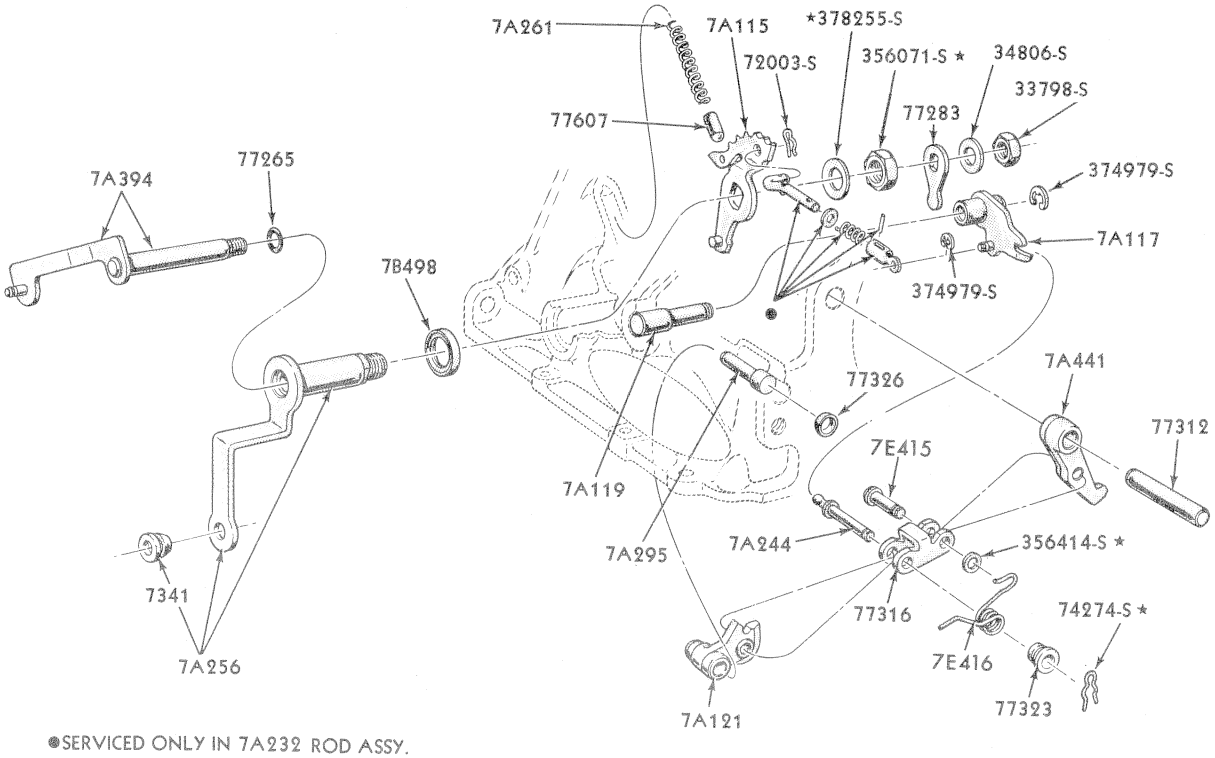

●SERVICED ONLY IN 7A232 ROD ASSY.

PARKING PAWL, THROTTLE AND MANUAL CONTROL LINKAGE – F. M. X. TYPE

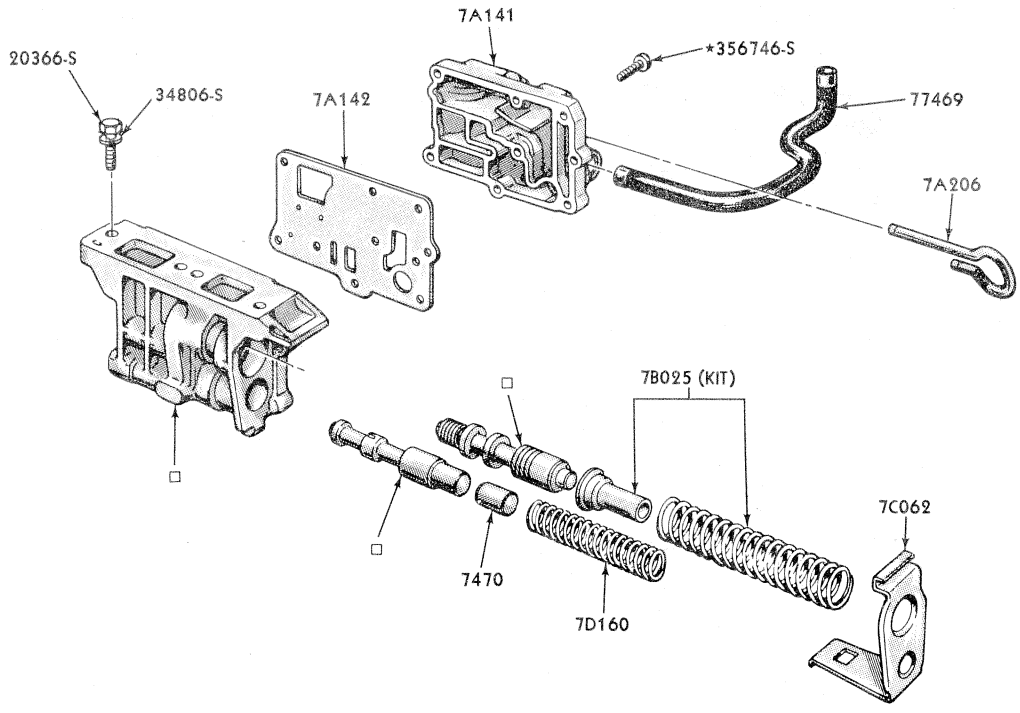

□ SERVICED ONLY IN 7A139 REGULATOR ASSY.

OIL PRESSURE REGULATOR – F. M. X. TYPE

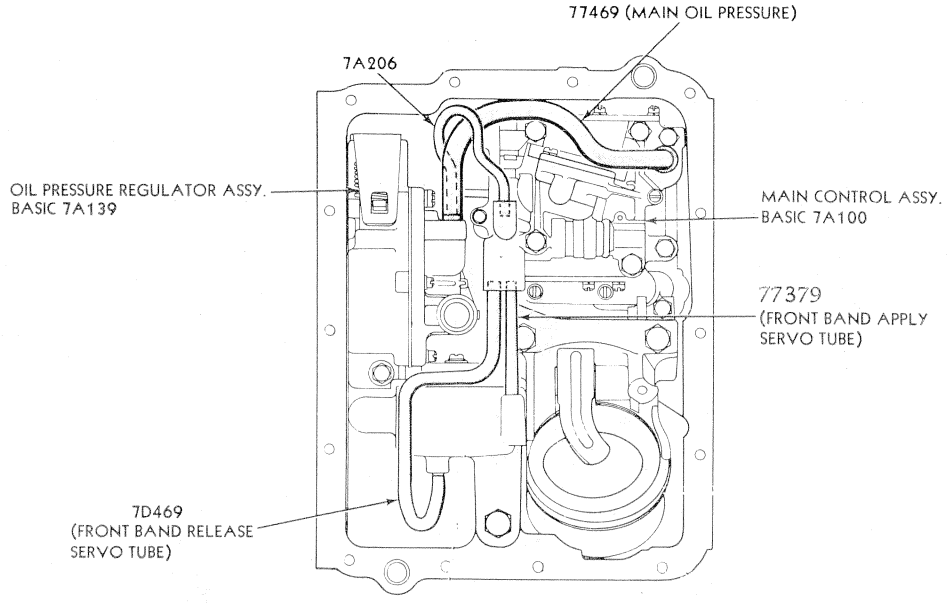

OIL PRESSURE TUBES INSTALLATION – F. M. X. TYPE

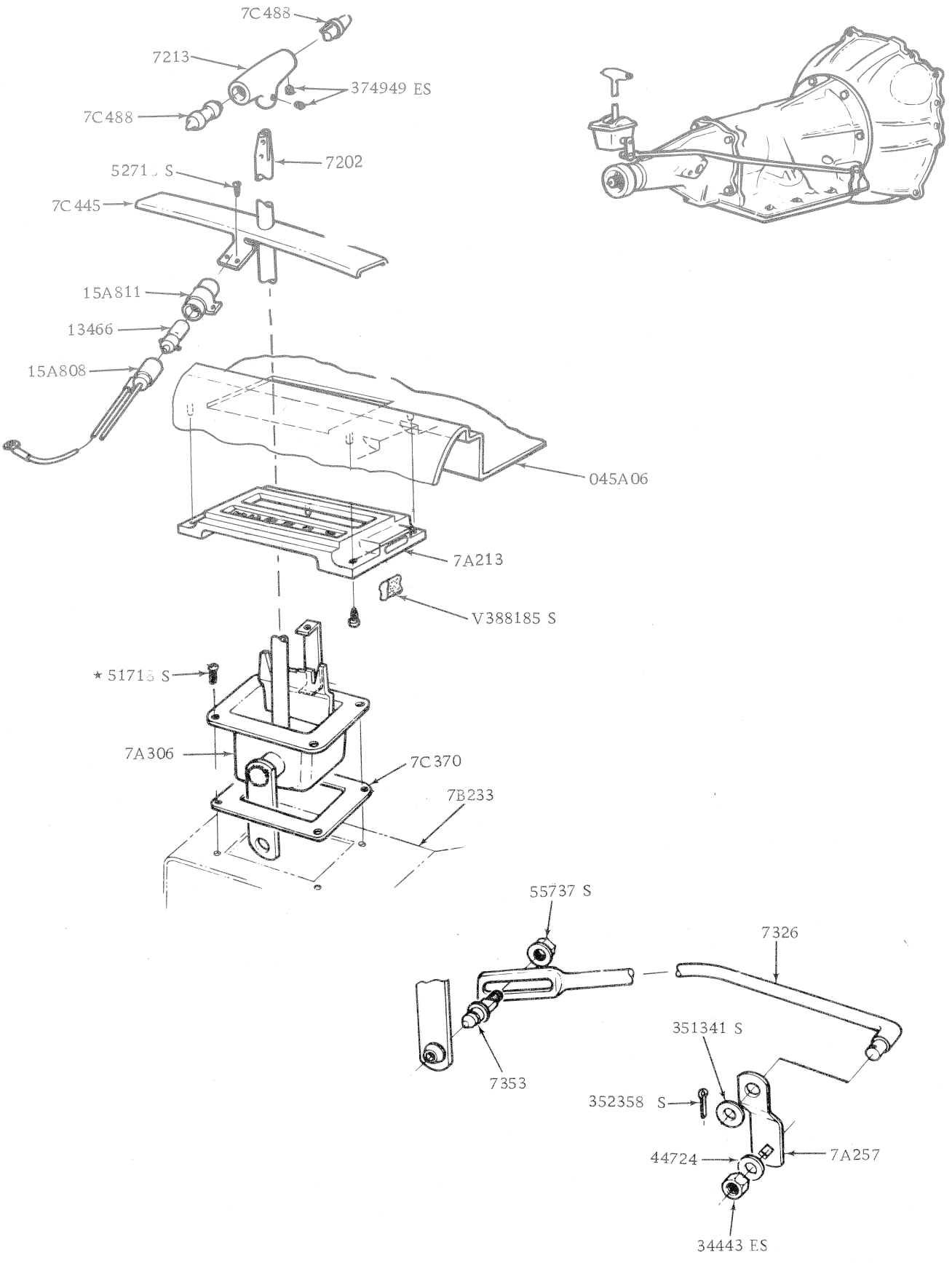

FLOORSHIFT LEVER AND RELATED PARTS AUTO. TRANS

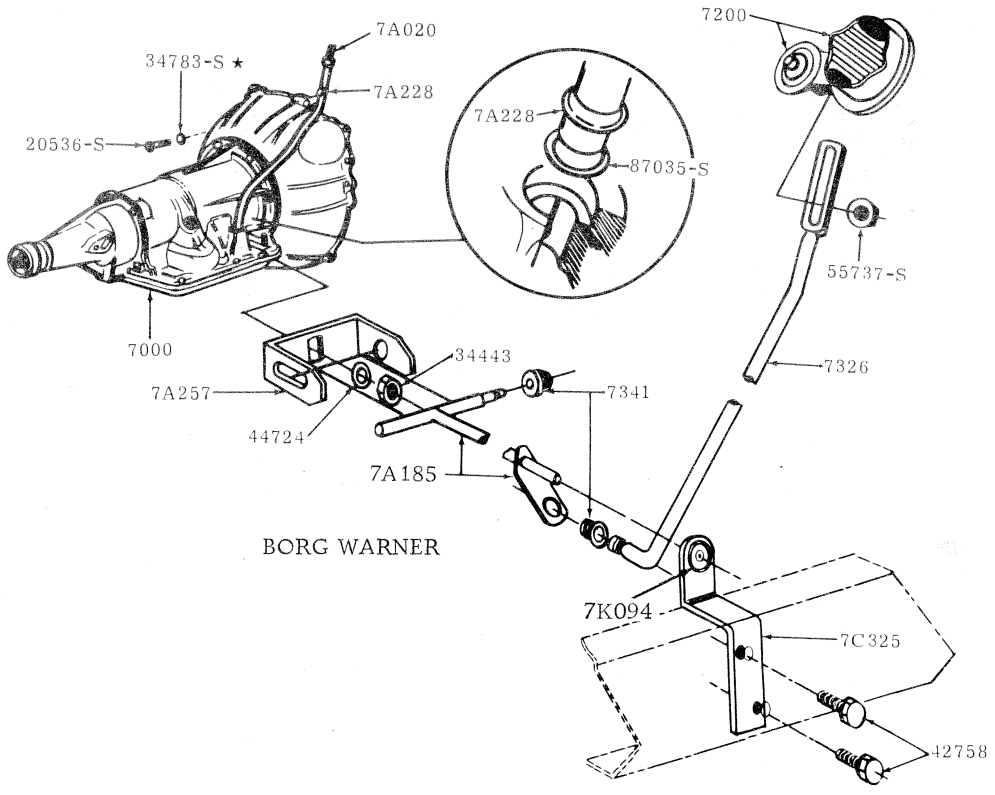

COLUMN SHIFT LINKAGE S07 05 1

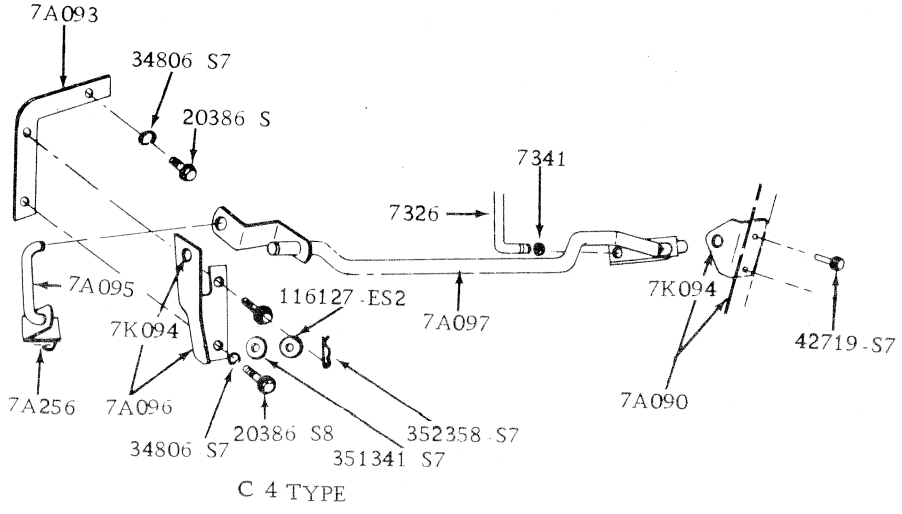

C 4 TYPE

COLUMN SHIFT LINKAGE S07 01 1

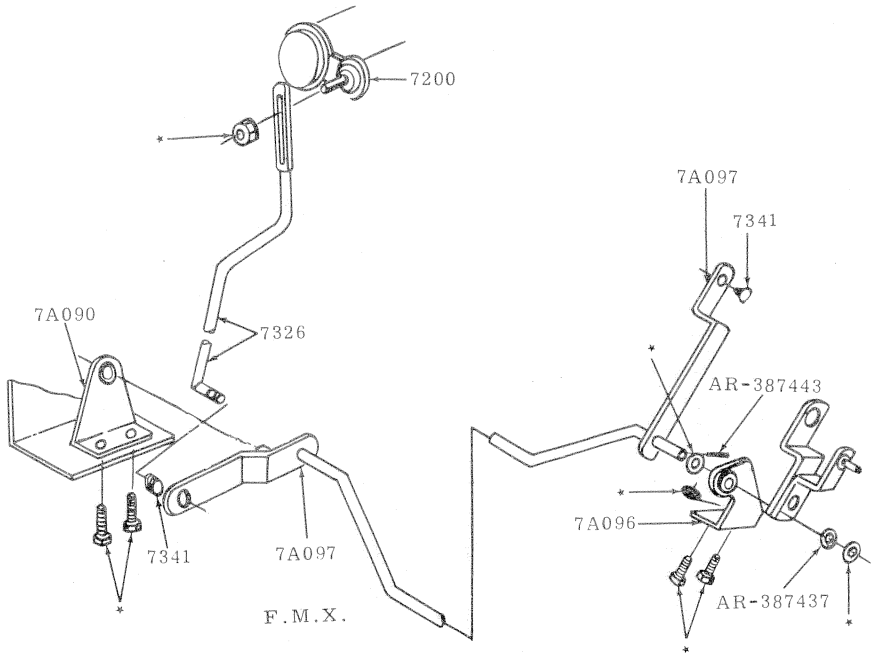

COLUMN SHIFT LINKAGE

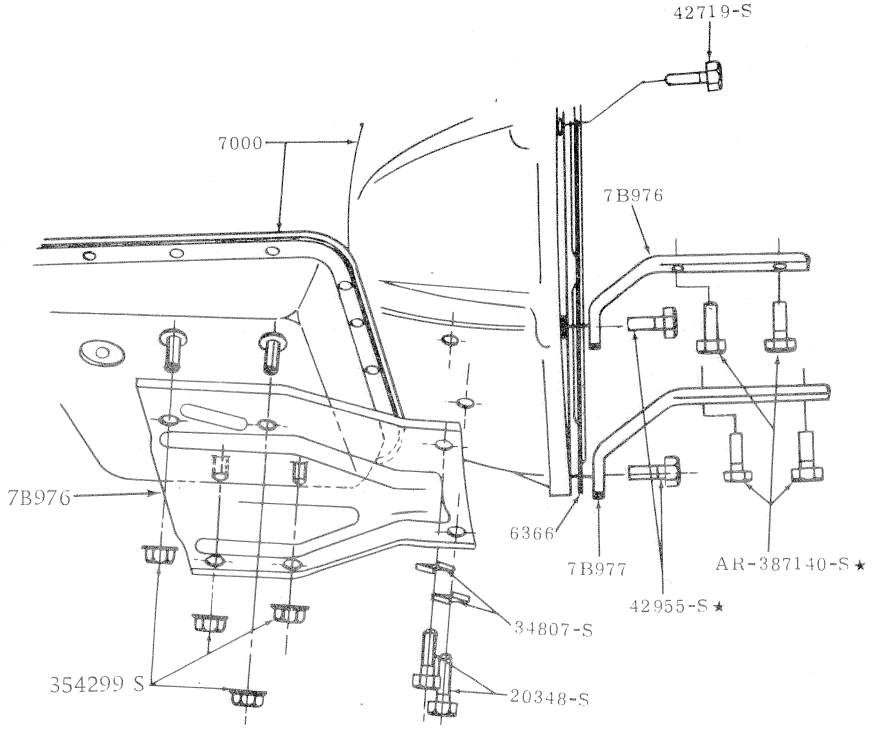

TRANSMISSION BRACES

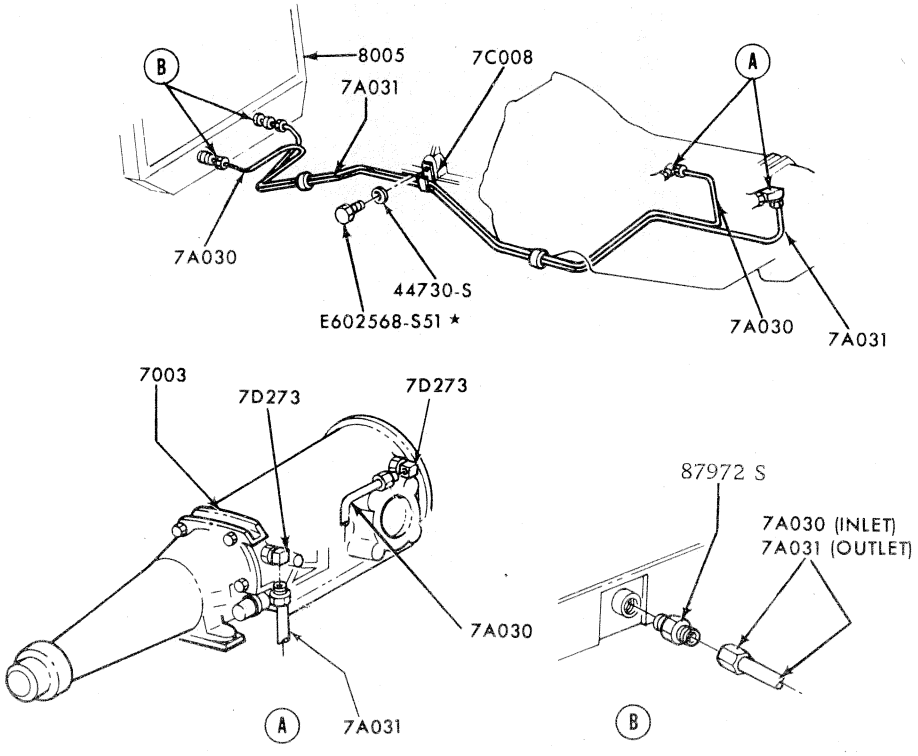

TYPICAL TRANSMISSION OIL COOLER PIPE INSTALLATION

MODEL	BODY TYPE	REMARKS	UNIT	PART NUMBER		
– – 7506 – – SHAFT – CLUTCH & BRAKE PEDAL PIVOT						
XA/B, ZF/G	All	Man. trans.	1	XA	7506	A
XA/B, ZF/G	All	Auto. trans.	1	XA	7506	B
XA/B, ZF/G	All	Retaining clip – shaft to support assy.	2	97414 S		
– – 7A506 – – SPACER – CLUTCH SLAVE CYLINDER TO HOUSING						
XA/B	54H, 65H		2	XW	7A506	A
– – 7A507 – – ROD ASSY. – CLUTCH SLAVE CYLINDER PUSH						
XA/B, ZF/G	All	PBR type	1	XA	7A507	A
– – 7A508 – – CYLINDER ASSY. – CLUTCH SLAVE						
XA/B, ZF/G	All	PBR type	1	XA	7A508	B
– – 7512 – – WASHER – BRAKE & CLUTCH PEDAL SHAFT SPRING						
XA/B, ZF/G	All		2	100E	7512	
– – 7A512 – – TUBE ASSY. – CLUTCH MASTER CYLINDER TO SLAVE CYLINDER						
XA/B, ZF/G	All exc. 54H, 65H		1	XA	7A512	A
XA/B	54H, 65H		1	XA	7A512	B
XA/B	54H, 65H	When extractor type exhaust manifolds fitted	1	XA	7A512	C
– – 7513 – – SHIELD – CLUTCH RELEASE LEVER DUST						
XA/B, ZF/G	All	6 cyl.	1	C30A	7513	A
XA/B, ZF/G	All	8 cyl.	1	C60Z	7513	C
– – 7A513 – – CUP – CLUTCH SLAVE CYLINDER						
XA/B, ZF/G	All	PBR type	1	XA	7A513	A
XA/B, ZF/G	All	BAI type	1	E9 FB 1		
– – 7A514 – – PISTON – CLUTCH SLAVE CYLINDER						
XA/B, ZF/G	All		1	ARC5DZ	7A514	A
– – 7515 – – LEVER ASSY. – CLUTCH RELEASE (REFER ALSO 7541)						
XA/B, ZF/G	All	6 cyl.	1	ARC6DA	7541	B
XA/B, ZF/G	All	8 cyl.	1	C80Z	7515	A
– – 7519 – – PEDAL ASSY. – CLUTCH						
XA/B, ZF/G	All		1	XA	7519	AB
– – 7522 – – PIVOT – CLUTCH RELEASE LEVER						
XA/B, ZF/G	All	6 cyl.	1	ARC6DA	7522	A
XA/B, ZF/G	All	8 cyl.	1	XA	7522	AA
– – 7A522 – – CLUTCH PEDAL & BRACKET ASSY.						
XA/B, ZF/G	All	250/302 c.i.d. 2V	1	XA	7A522	AB
– – 7A524 – – SPRING ASSY. – CLUTCH PEDAL LEVER ASSIST						
XA/B, ZF/G	All	250/302 c.i.d. 2V	1	XT	7A524	A
– – 7541 – – LEVER – CLUTCH RELEASE (REFER 7515)						
– – 7A541 – – ROD ASSY. – CLUTCH PUSH						
XA/B, ZF/G	All	P.B.R. type	1	XA	7A541	A
XA/B, ZF/G	All	Pin – push rod to clutch pedal	1	380699 S2		
– – 7A543 – – CYLINDER ASSY. – CLUTCH MASTER						
XA/B, ZF/G	All	PBR type	1	XA	7A543	AA
XA/B, ZF/G	All	Washer – 3/8" lock – att. m/cyl. to plate	a/r	34807 S8		
XA/B, ZF/G	All	Nut – 3/8" – 16 – att. m/cyl. to plate	a/r	33799 S2		
– – 7A544 – – WASHER – SPRING CLUTCH MASTER CYL.						
XA/B, ZF/G	All		1	ARC6DZ	7A544	A
– – 7A545 – – COVER – DUST CLUTCH MASTER CYLINDER						
XA/B, ZF/G	All		1	ARC6DZ	7A545	A
– – 7A546 – – CIRCLIP – CLUTCH MASTER CYLINDER						
XA/B, ZF/G	All		1	ARC6DZ	7A546	A

MODEL	BODY TYPE	REMARKS	UNIT	PART NUMBER		
– – 7548 – – HUB & BEARING ASSY. – CLUTCH RELEASE						
XA/B, ZF/G	All	6 cyl. – also used on 445 vehicles with 250 c.i.d. 2V 4 spd.	1	XY	7548	AA
XA/B, ZF/G	All	250/302 c.i.d. 2V	1	XY	7548	G
XA/B, ZF/G	All	351 c.i.d.	1	XW	7548	B
– – 7550 – – DISC ASSY. – CLUTCH						
XA/B, ZF/G	All	200/250 c.i.d. 1V – 3 speed trans. – also used on 445 vehicles with 250 c.i.d. 2V 4 spd.	1	XY	7550	A
XB, ZG	All	200/250 c.i.d. – 4 speed trans.	1	XY	7550	C
XB, ZG	All	200/250 c.i.d. – heavy duty – police & taxi	1	XW	7550	F
XA/B, ZF/G	All	250 2V/302 c.i.d.	1	D20Z	7550	B
XA/B	All	351 c.i.d. – rear – P/o XY-7A563-AB/BA	1	XW	7550	C
XA/B	All	351 c.i.d. – front – P/o XY-7A563-AB/BA	1	XW	7550	B
– – 7560 – – KIT – CLUTCH SLAVE CYLINDER REPAIR						
XA/B, ZF/G	All	PBR	1	XA	7560	A
XA/B, ZF/G	All	BAI	1	AR 100 E	7560	A
– – 7562 – – SPRING RETAINER – CLUTCH RELEASE LEVER						
XA/B, ZF/G	All	6 cyl.	1	ARC6DA	7562	A
– – 7563 – – PLATE & COVER ASSY. – CLUTCH PRESSURE (ALSO REFER 7A563)						
XA/B, ZF/G	All	200/250 c.i.d. 1V	1	XB	7563	A
XA/B, ZF/G	All	250 2V/302 c.i.d.	1	D20Z	7563	A
XA, ZF	All	250 2V – 3 spd. & 4 spd. – used on 445 vehicles	1	TK	7563	F
– – 7A563 – – KIT – CLUTCH PRESSURE PLATE (BALANCED)						
XA/B, ZF/G	All	351 c.i.d. – also handling option	1	XY	7A563	BA
– – 7K567 – – SPRING – THROTTLE RETURN (REFER 9737)						
– – 7600 – – BEARING – CLUTCH PILOT						
XA/B, ZF/G	All		1	XY	7600	A
– – 7A716 – – BOOT – CLUTCH SLAVE CYLINDER						
XA/B, ZF/G	All		1	E9 GD 1		

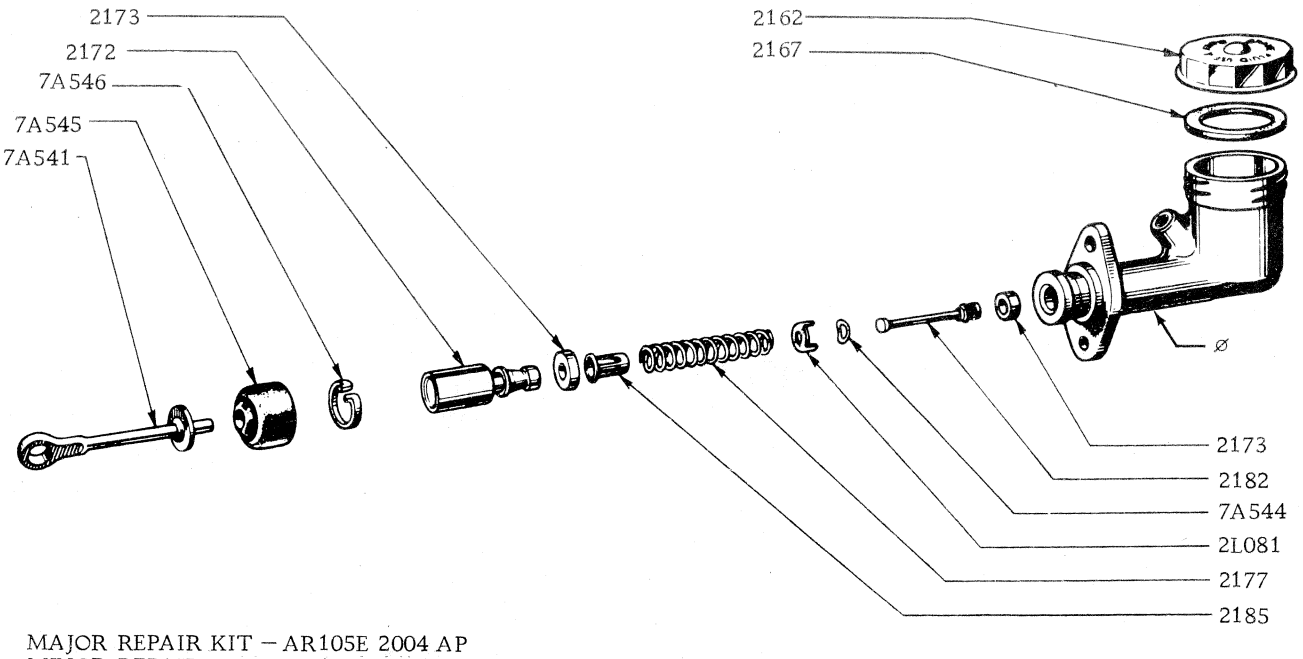

MAJOR REPAIR KIT – AR105E 2004 AP
MINOR REPAIR KIT – AR105E 2004 A

ø SERVICED ONLY IN 7A543 ASSY.

CLUTCH MASTER CYLINDER

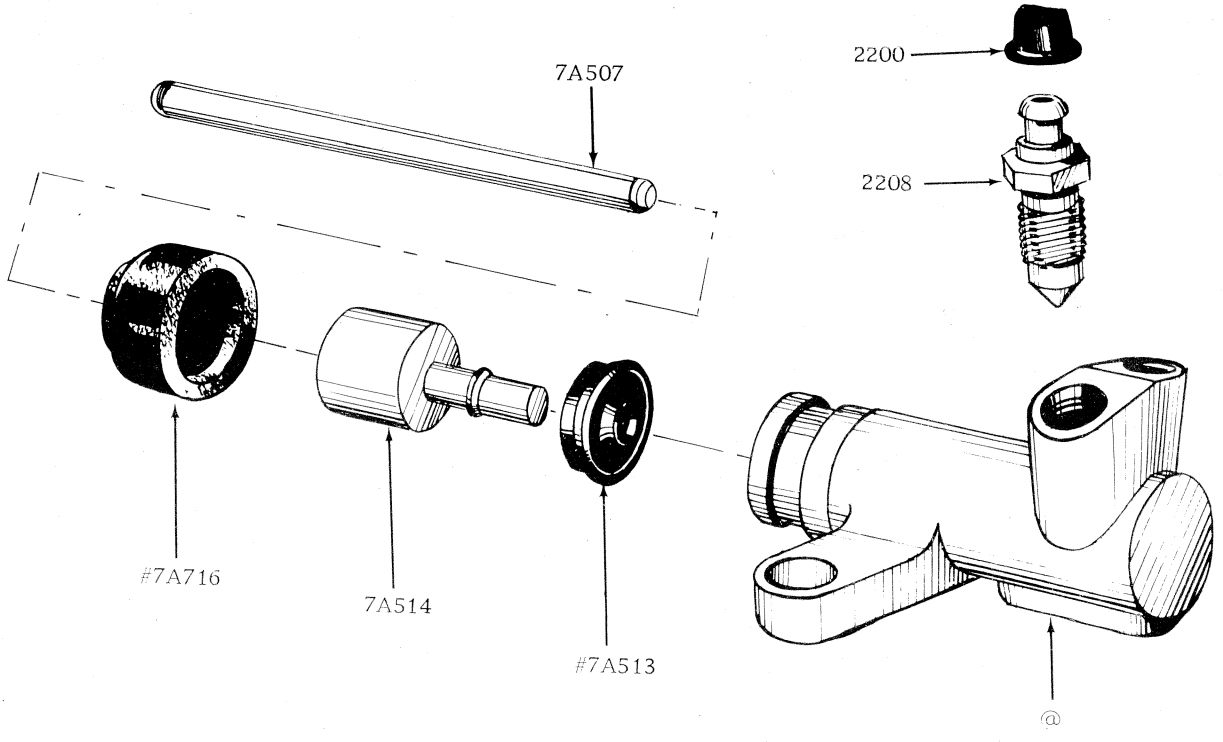

@ Supplied Only In 7A508 Assy.
# Also Serviced In 7560 Kit.

CLUTCH SLAVE CYLINDER

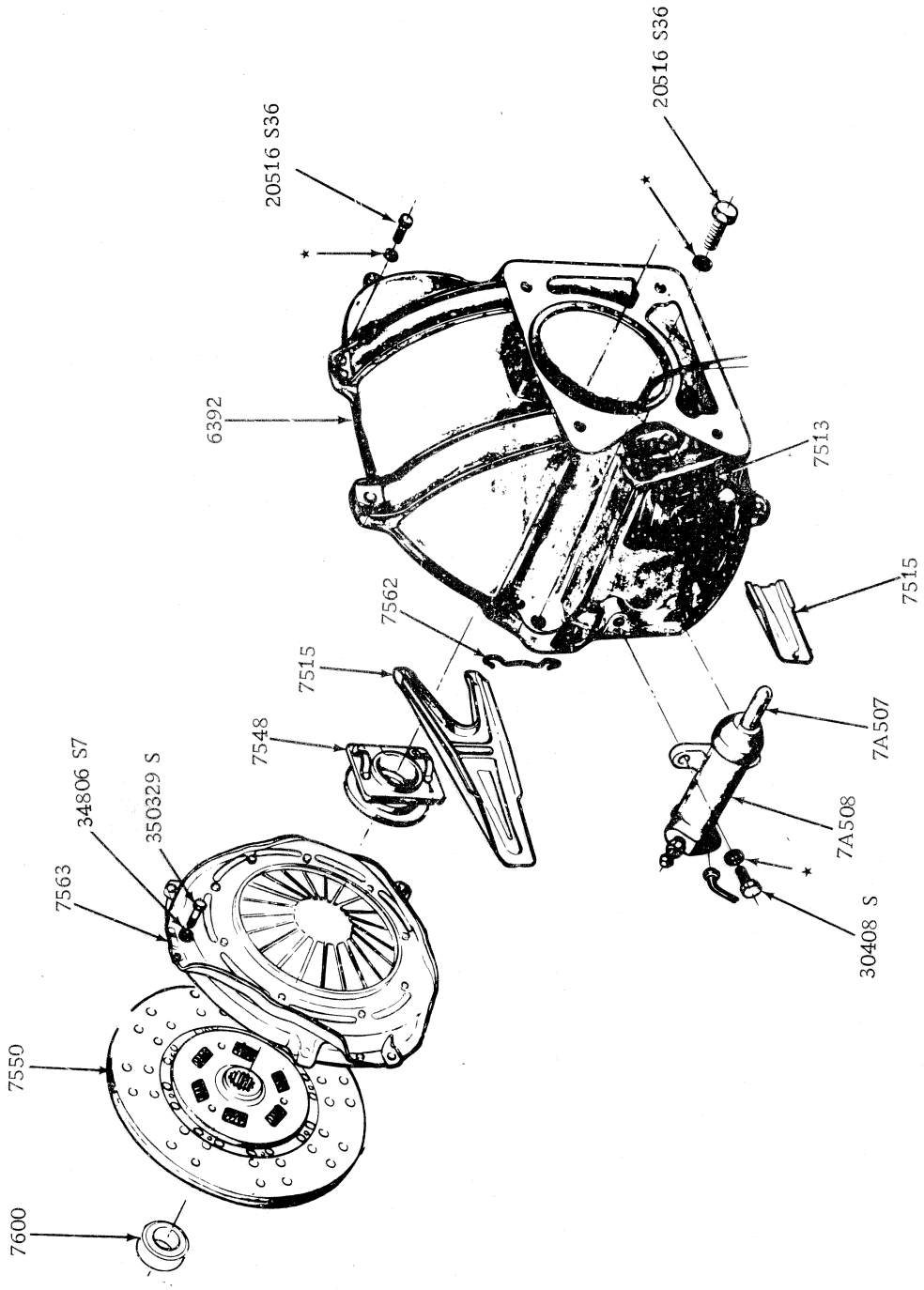

CLUTCH MECHANISM 6 CYLINDER

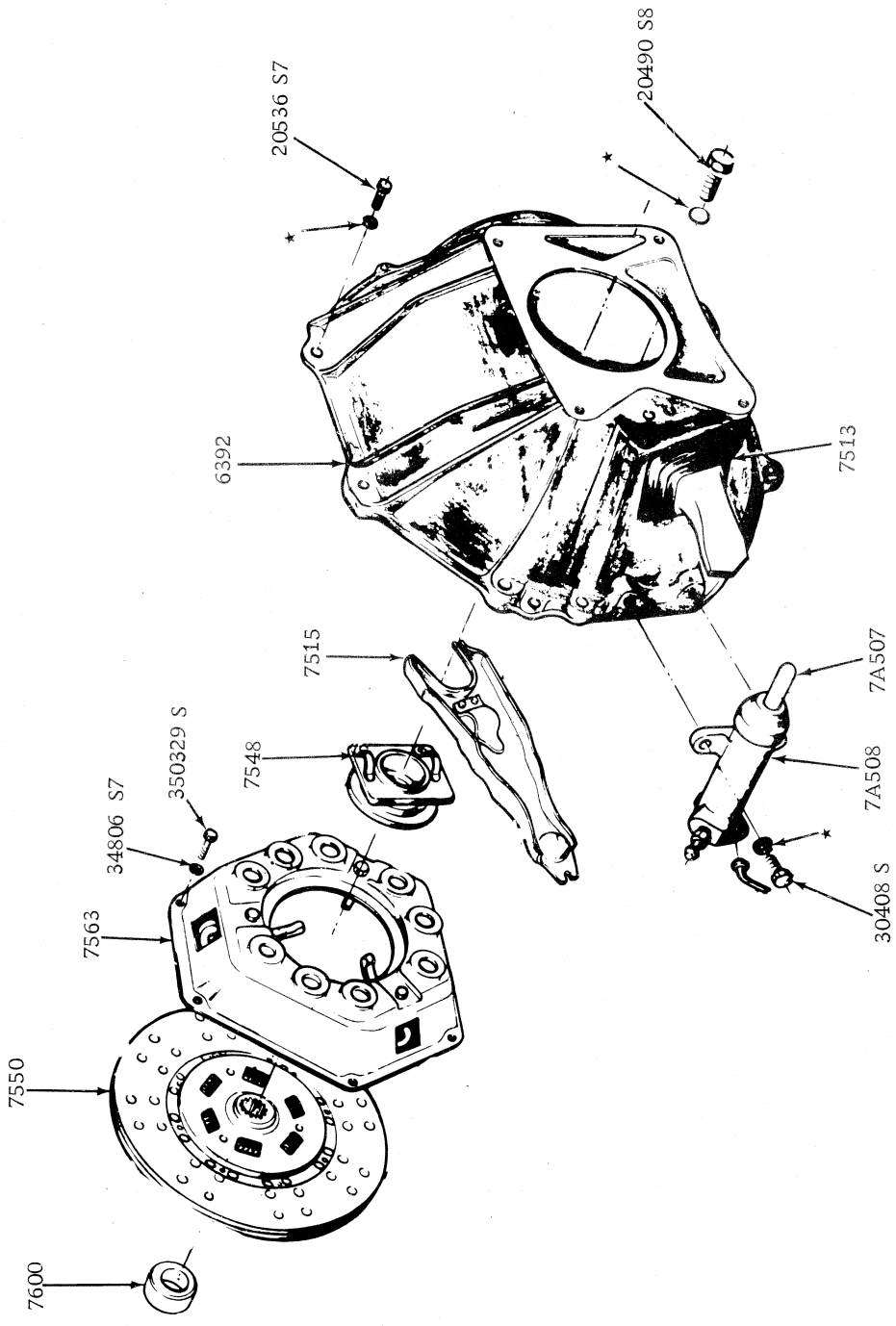

CLUTCH MECHANISM 302 C.I.D

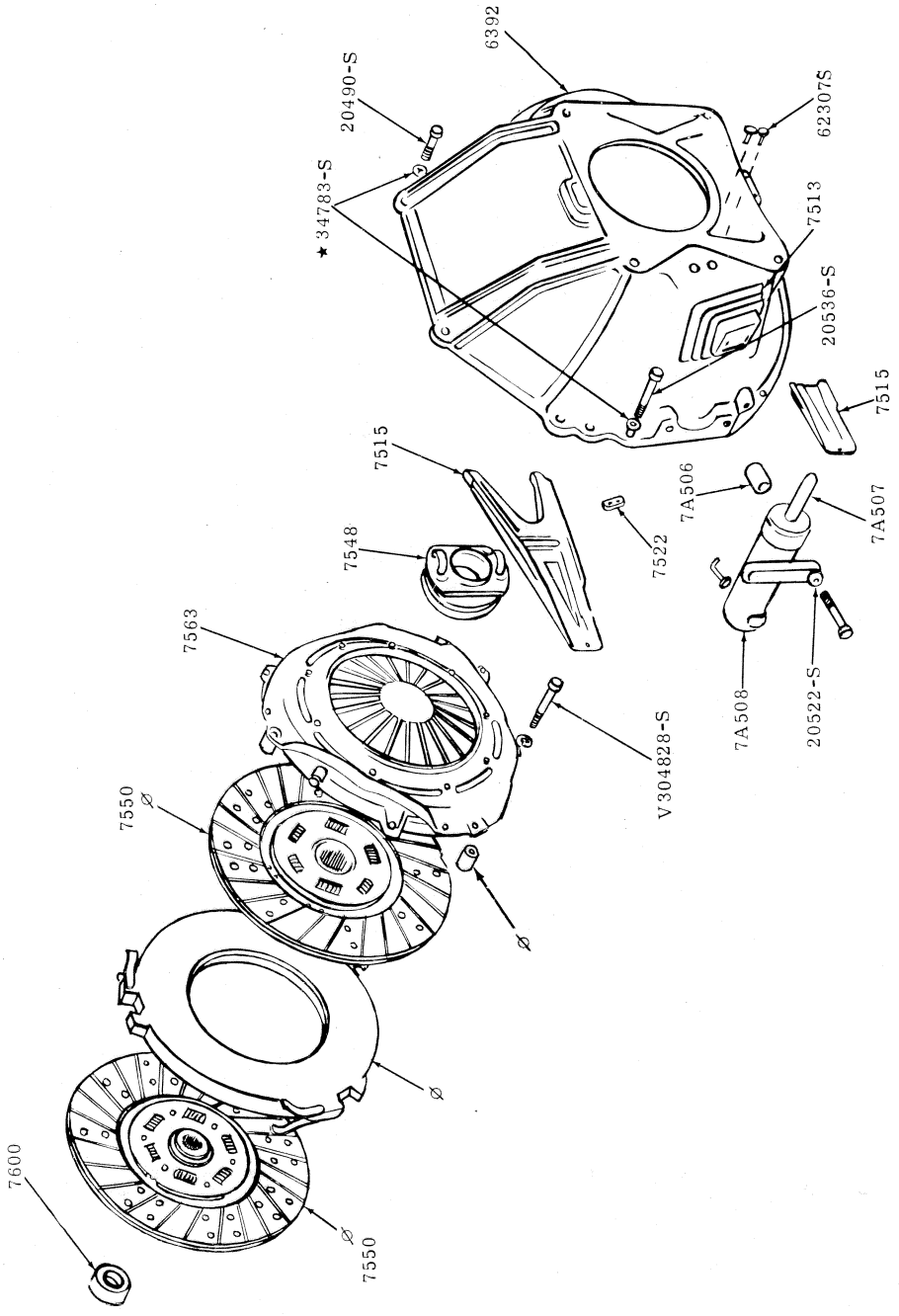

Ø PART OF 7A563 KIT

CLUTCH MECHANISM 351 C.I.D.

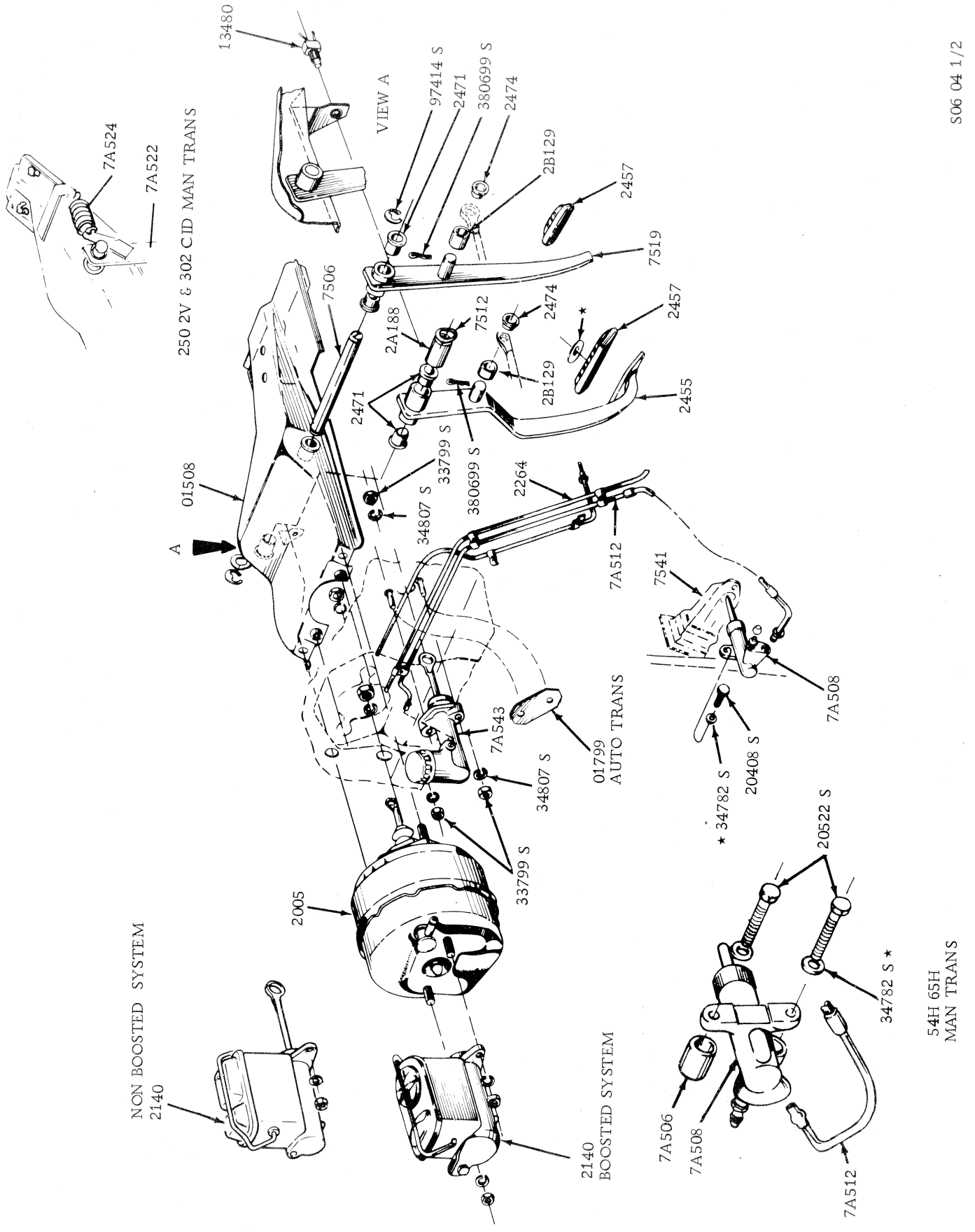

BRAKE AND CLUTCH MECHANISM

MODEL	BODY TYPE	REMARKS	UNIT	PART NUMBER		
-- 8005 -- RADIATOR ASSY.						
XA/B, ZF/G	All	200 c.i.d.	1	XA	8005	HA
XA/B, ZF/G	All	250 c.i.d. W/o A/C	1	XA	8005	HA
XA/B, ZF/G	All	250 c.i.d. – with A/C – also with extra cooling	1	XA	8005	AA
XA/B, ZF/G	All	302 c.i.d. – W/o A/C	1	XA	8005	CA
XA/B, ZF/G	All	302 c.i.d. – with A/C	1	XA	8005	JA
XA/B, ZF/G	All	351 2V – W/o A/C	1	XA	8005	GA
XA/B, ZF/G	All	351 2V – with A/C – man. trans.	1	XA	8005	JA
XA/B, ZF/G	All	351 c.i.d. – with A/C	1	XA	8005	FA
XA/B	54H, 65H	351 4V – W/o A/C	1	XA	8005	JA
XA/B, ZF/G	All	200, 250 c.i.d. – bolt – radiator mounting – 5/16" x ¾"	4	V 388363 S2		
-- 8052 -- BRACKET ASSY. – RADIATOR SUPPORT LOWER						
XA/B, ZF/G	All	R.H. – 6 & 8 cyl. – W/o A/C – also 200 c.i.d. Singapore – 9" x 1"	1	XA	8052	A
XA/B	54H, 65H	R.H. – W/AC – also 250 c.i.d. with extra cooling – 5" x 5"	1	XA	8052	B
XA/B	54H, 65H	L.H. – W/AC – 2" x 6"	1	XA	8B381	B
XA/B, ZF/G	All exc. 54H, 65H	L.H. – 8 cyl. – also 250 c.i.d. with extra cooling – 9" x 1"	1	XA	8052	A
XA/B, ZF/G	All	Nut & retainer 5/16" – 18 – radiator support to bracket	2	378681 S40		
-- 8075 -- HOSE – RADIATOR OVERFLOW						
XB, ZG	All	6 cyl. – from 10/74	1	XB	8075	A*
-- 8100 -- CAP ASSY. – RADIATOR						
XA/B, ZF/G	All		1	ARS 12 A		
-- 8124/5 -- PAD – RADIATOR SUPPORT BRACKET						
XA/B, ZF/G	All	All with A/C – R.H. – upper & lower	2	XA	8124	AA
XA/B, ZF/G	All	All with A/C – L.H. – upper & lower	2	XA	8124	BA
-- 8146 -- SHROUD – FAN						
XA/B, ZF/G	All	250 c.i.d. – W/AC – also with extra cooling	1	XA	8146	A
XA/B, ZF/G	All	8 cyl. – W/o A/C – also 6 cyl. – Indonesia	1	XA	8146	AA
XA/B	54H, 65H	W/AC	1	XA	8146	B
XA/B, ZF/G	All	8 cyl. with A/C – nut spring – shroud to radiator	2	383375 S2		
-- 8B172 -- SEAL – RADIATOR UPPER						
XB, ZG	All	With A/C – from 7/74	1	XB	8B172	A*
-- 8194 -- RETAINER – RADIATOR GRILLE EMBLEM						
XA	All	With driving lights	2	XA	8194	A
XA	54H, 65H		2	ZD	8194	A
XB	All	With driving lights	2	XB	8194	A*
-- 8200 -- GRILLE ASSY. – RADIATOR						
XA	All exc. 54H, 65H	Exc. with driving lights – when required for superbird dealer to delete centre grille moulding and paint grille black	1	XA	8200	A
XA	54H, 65H		1	XA	8200	B
XA	All	With driving lights	1	XA	8200	C
ZF	54		1	ZF	8200	AA
XB	All	Except with driving lights	1	XB	8200	A
XB	All	With driving lights	1	XB	8200	CA*
XB	54H, 65H	Black	1	XB	8200	AA1A
XB	54H, 65H	Argent	1	XB	8200	AA1P
XB	54H, 65H	Brown	1	XB	8200	AA1F
XB	54H, 65H	Green	1	XB	8200	AA1R
ZG	All		1	ZG	8200	A
XA, ZF	All	Screw – No. 8 – 15 x .62" – att. grille assy. (8200) to hood lock suppt. (2), att. grille assy. (8200) to head lamp housing (6), Fairlane to h/lamp door (+4)	a/r	52734 S46		
XA/B, ZF/G	All	Spring nuts – No. 8 'A' type – att. rad. grille (8200) to hood lock supt. (4), h/lamp hsng. also (8200) to (13009 & 13101) (13A120) to (8200)	a/r	V 388202 S46		
XA/B, ZF/G	All	Screw – No. 8 – 15 x .50" – grille to mounting bracket	2	V 387919 S36		
XB	All	Screw – att. grille to bracket (8K015)	2	54564 S8		
ZG	All	Anchor bush – att. grille to upper bracket	2	AR 387348 S		
XB, ZG	All	Screw & washer assy. – grille supt. brkt. to radiator supt. brkt.	a/r	378196 S40		

MODEL	BODY TYPE	REMARKS	UNIT	PART NUMBER		
– – 8231 – – RETAINER PAD – RADIATOR GRILLE EMBLEM						
XA	All	"Falcon" – "Futura" – 2 holes	1	XA	8231	B
XA	54, 65, 71	"Fairmont" – 3 holes	1	XA	8231	A
XB	54	"Futura"	1	XB	8231	B
XB	54, 65, 71	"Fairmont"	1	XB	8231	A
XB	54, 65	"GT"	1	XB	8231	CA*
– – 8255 – – GASKET – WATER OUTLET CONNECTION						
XA/B, ZF/G	All	6 cyl.	1	CODE	8255	A
XA/B, ZF/G	All	8 cyl.	1	RG 7		
– – 8260 – – HOSE – RADIATOR UPPER						
XA	All	200 c.i.d. – to 2/73	1	KM	5194	
XA/B	Alo	200 c.i.d. – man. trans. – from 2/73	1	KM	5194	
XA/B	All	200 c.i.d. – auto. trans. – from 2/73	1	AKM	5060	
XA/B, ZF/G	All	250 c.i.d. – W/o A/C	1	AKM	5060	
XA/B, ZF/G	All	250 c.i.d. – with A/C – also with extra cooling	1	AKM	5193	
XA/B, ZF/G	All	8 cyl. – W/o A/C	1	AKM	5072	
XA/B, ZF/G	All	8 cyl. – with A/C	1	AKM	5048	
XA/B, ZF/G	All	Clip – hose attaching	a/r	R7 23		
– – 8262 – – PLATE – RADIATOR GRILLE NAME ATTACHING						
XA	54, 65, 66, 71, 78	"Falcon"	4	XA	8262	BA
XB	54, 65, 66, 71, 78	"Falcon" – fender & luggage compt. door	3	XA	8262	BA
XA	54	"Futura"	4	XA	8262	CA
XA	54, 65, 71	"Fairmont"	2	XA	8262	AA
XA/B	54H, 65H	"GT"	1	XA	8262	DA
XB	54, 65, 66, 71, 78	"Falcon" – grille only	1	XB	8262	B
XB	54	"Futura"	1	XB	8262	C
XB	54, 65, 71	"Fairmont"	1	XB	8262	A
XA	All	Spring nut – 1/8" – plate to radiator grille	2	45037 S36		
XB	All	Nut – self threading – plate to grille	2	V 372577 S35*		
XA/B	66, 71, 78	Clip – .125 tubular – plate to tailgate	a/r	V 388398		
– – 8286 – – HOSE – RADIATOR LOWER						
XA	All	200 c.i.d. – to 2/73	1	KM	5195	
XA/B	All	200 c.i.d. – man. trans. – from 2/73	1	KM	5195	
XA/B	All	200 c.i.d. – auto. trans. – from 2/73	1	AKM	5070	
XA/B, ZF/G	All	250 c.i.d. – W/o A/C	1	AKM	5070	
XA/B, ZF/G	All	250 c.i.d. – with A/C – also with extra cooling	1	AKM	5071	
XA/B, ZF/G	All	8 cyl. – W/o A/C	1	AKM	5073	
XA/B, ZF/G	All	8 cyl. – with A/C	1	AKM	5108	
XA/B, ZF/G	All	Clip – hose attaching	a/r	R7 23		
– – 8310 – – DEFLECTOR – RADIATOR AIR SIDE						
XA/B, ZF/G	All	With A/C – also with extra cooling	2	XA	8310	A
XA, ZF	All	Pin – ¼" x .62" drive deflector to bezel – not serviced	11	375372 S		
– – 8A320/1 – – PLATE ASSY. – RADIATOR GRILLE NAME						
ZF	All		1	ZF	8A320	AA
ZG	All		1	ZG	8A321	A
ZF	All	Spring nut – 1/8" – att. plate to radiator grille	2	45037 S36		
– – 8B321 – – BRACKET ASSY. – RADIATOR SUPPORT LOWER (REFER 8052)						
– – 8A360/1 – – BRACKET ASSY. – RADIATOR SUPPORT – UPPER						
XA/B, ZF/G	All	R.H. – 250 c.i.d. – with A/C	1	XA	8A360	A
XA/B	54B,D	R.H. – 6 cyl. – Singapore, Thailand, Indonesia	1	XA	8A360	A
XA/B, ZF/G	All	R.H. – 302 c.i.d.	1	XA	8A360	A
XA/B, ZF/G	All	R.H. – 351 c.i.d. – W/o A/C	1	XA	8A360	A
XA	All	R.H. – 250 c.i.d. – OSO-G-4012	1	XA	8A360	A
XA/B, ZF/G	All	R.H. – 8 cyl. – with A/C	1	XA	8A360	B
XA/B, ZF/G	All	L.H. – 250 c.i.d. – with A/C	1	XA	8A361	A
XA/B	54B,D	L.H. – 6 cyl. – Singapore, Thailand, Indonesia	1	XA	8A361	A
XA/B, ZF/G	All	L.H. – 302 c.i.d.	1	XA	8A361	A
XA/B, ZF/G	All	L.H. – 351 c.i.d. – W/o A/C	1	XA	8A361	A
XA	All	L.H. – 250 c.i.d. – OSO-G-4012	1	XA	8A361	A
XA/B, ZF/G	All	L.H. – 8 cyl. – with A/C	1	XA	8A361	B
– – 8B381 – – BRACKET ASSY. – RADIATOR SUPPORT LOWER (REFER 8052)						

MODEL	BODY TYPE	REMARKS	UNIT	PART NUMBER		
– – 8A382 – – BRACKET – RADIATOR GRILLE MOUNTING – UPPER						
XA, ZF/G	All	.. ..	2	XA	8A382	A
XB	All	.. ..	2	XB	8A382	A
XA, ZF	All	Anchor bush No. 10 – mtg. bracket to radiator support ..	2	AR 387348 S		
– – 8A397 – – SEAL – RADIATOR LOWER						
XB, ZG	All	With A/C – from 7/74	1	XB	8A397	A*
– – 8426 – – MOULDING – RADIATOR GRILLE HEADLAMP SURROUND						
ZG	All	.. ..	4	ZG	8426	A

MODEL	BODY TYPE	REMARKS	UNIT	PART NUMBER

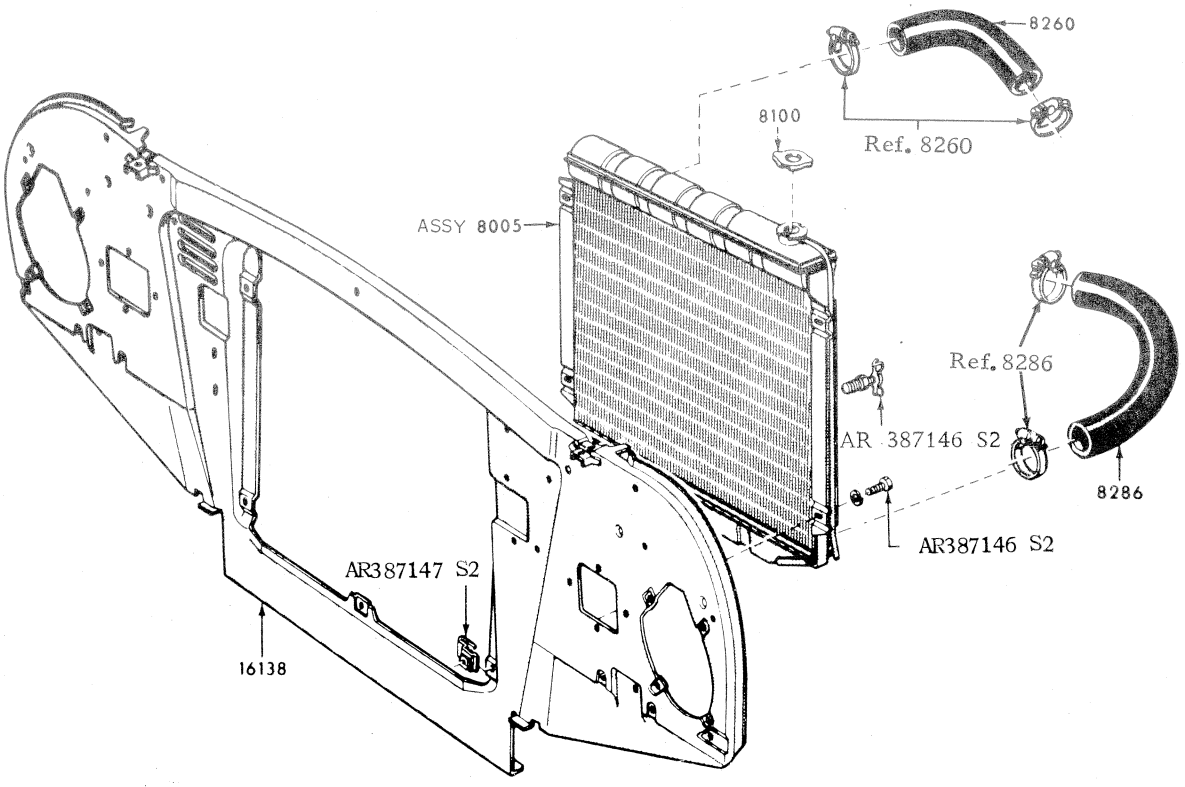

RADIATOR AND RELATED PARTS 6 CYLINDER 1V

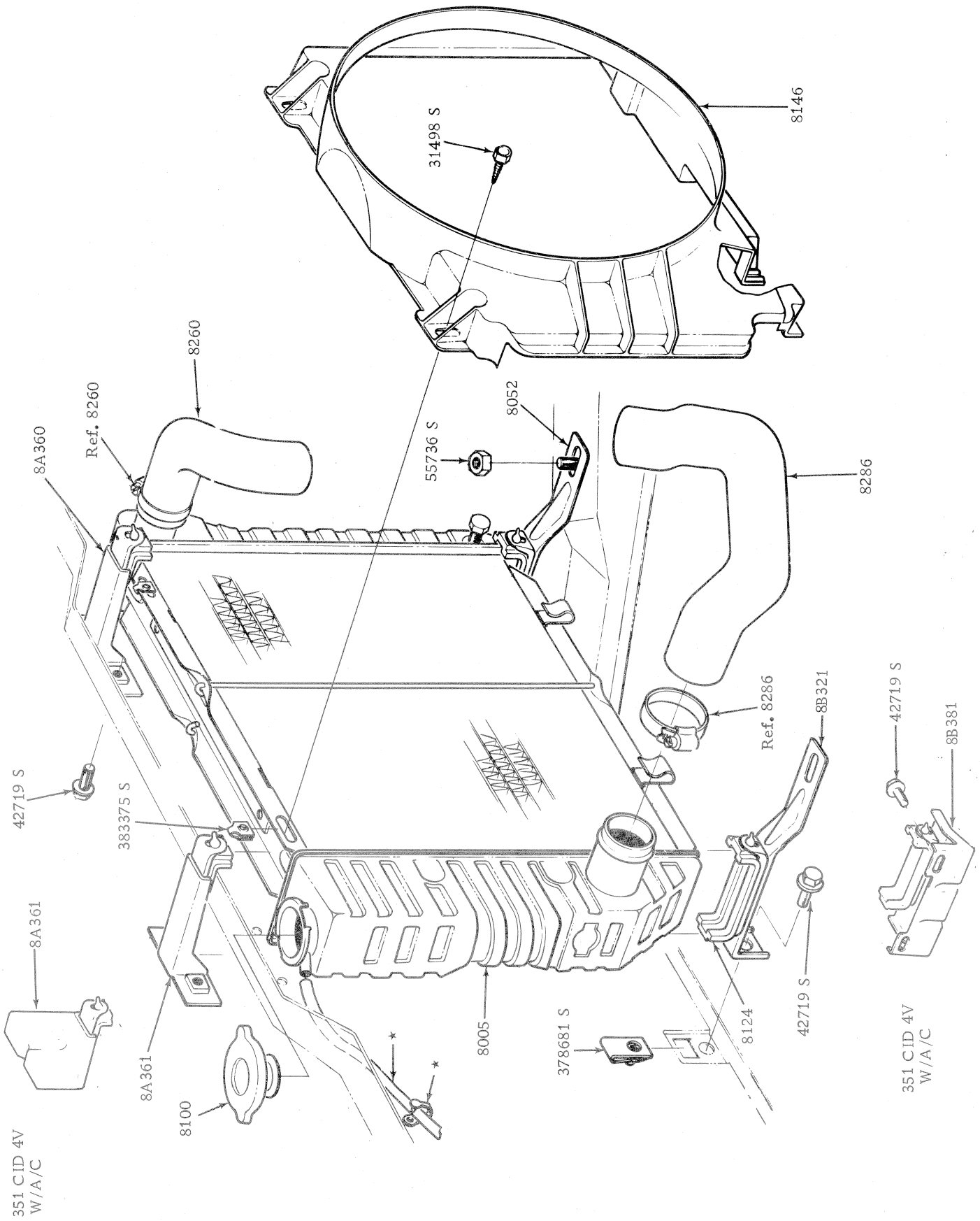

RADIATOR AND RELATED PARTS 6 CYL 2V AND 8 CYL

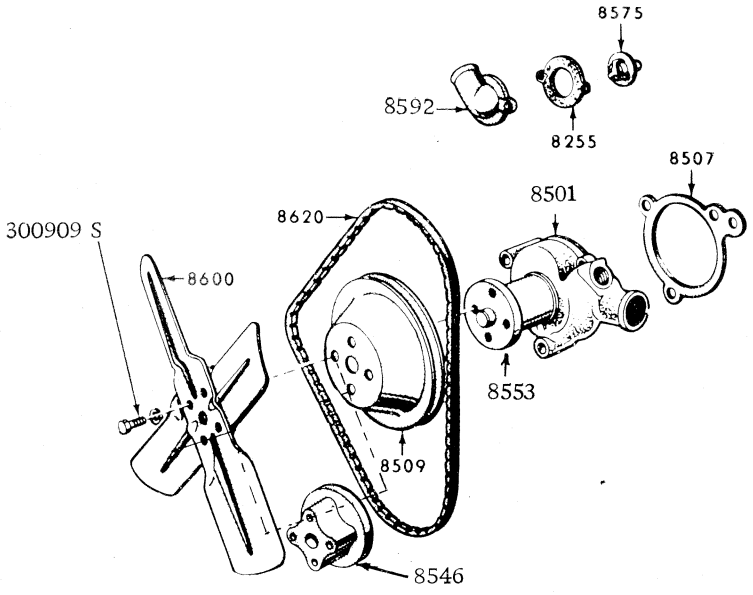

FAN, DRIVE AND RELATED PARTS 6 CYLINDER

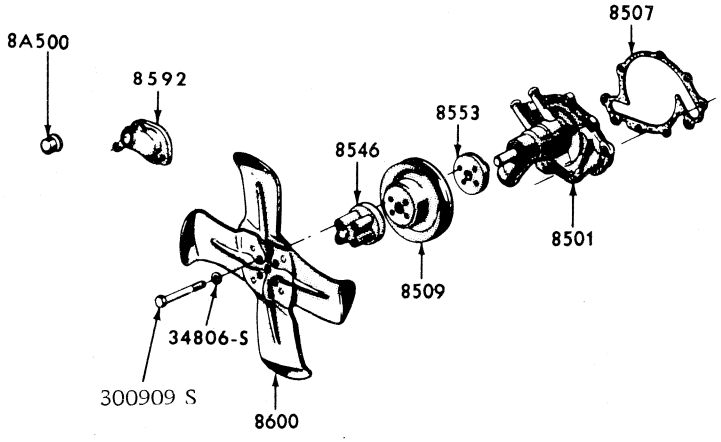

FAN, DRIVE AND RELATED PARTS 8 CYLINDER

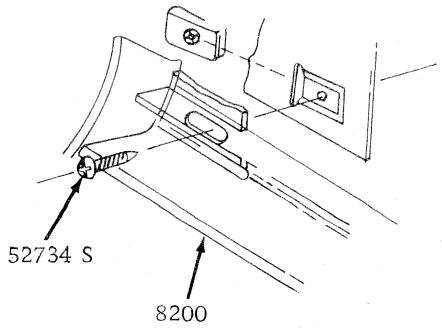

(A)

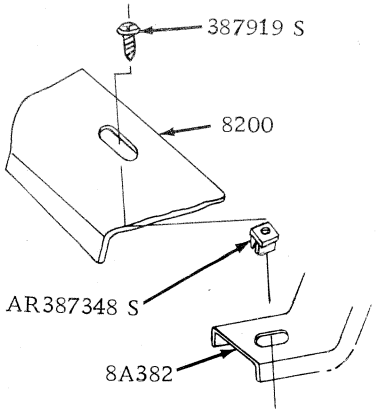

(B)

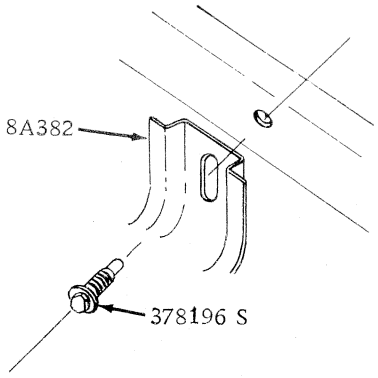

(C)

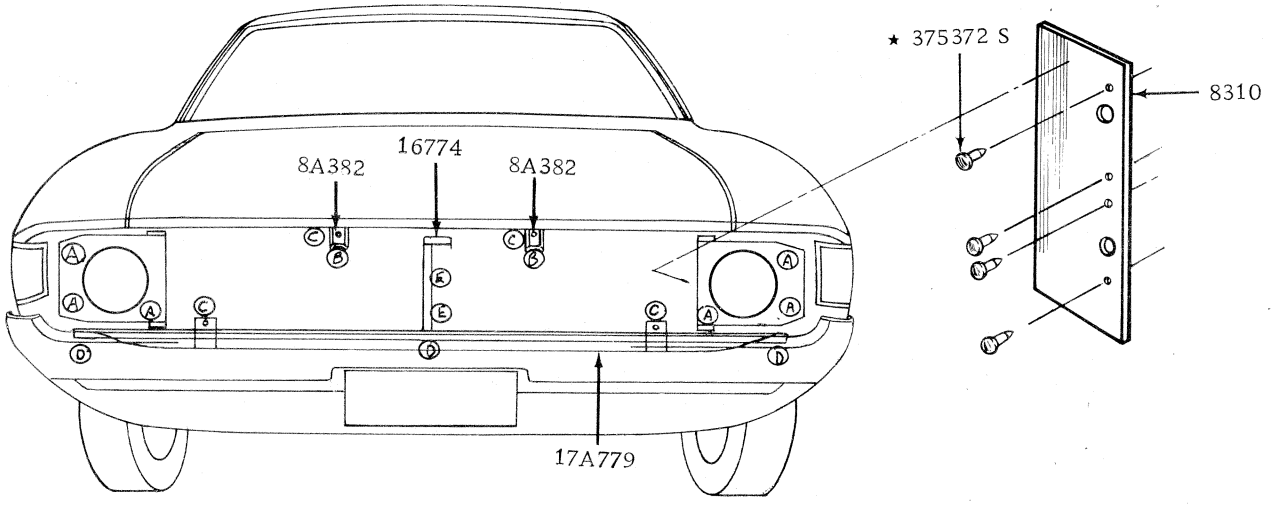

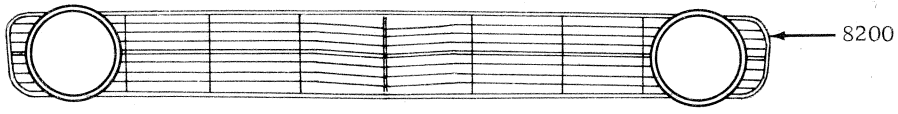

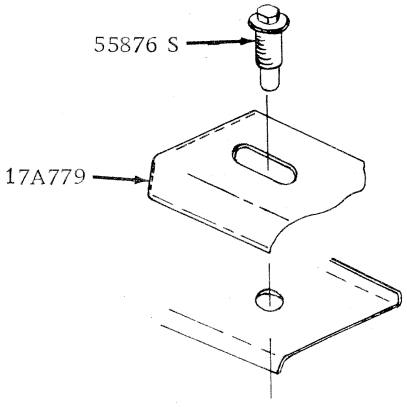

(D)

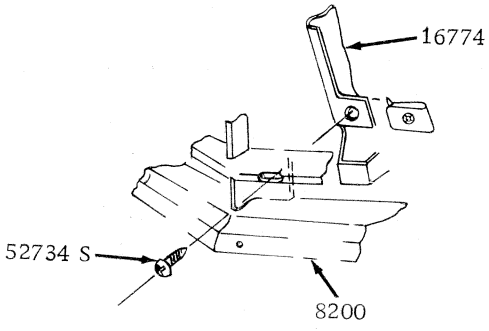

(E)

N01 15 20

RADIATOR GRILLE – FALCON XA

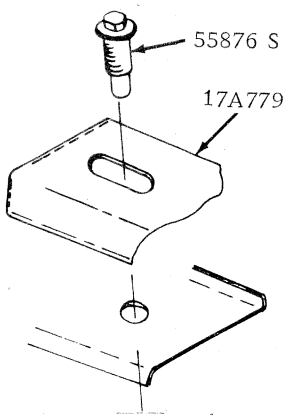

(E)

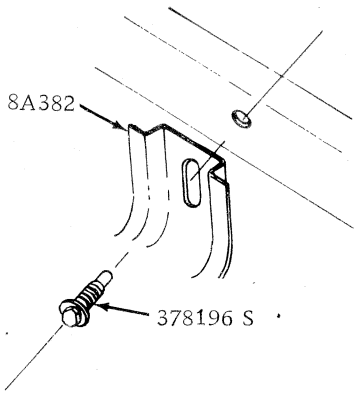

(D)

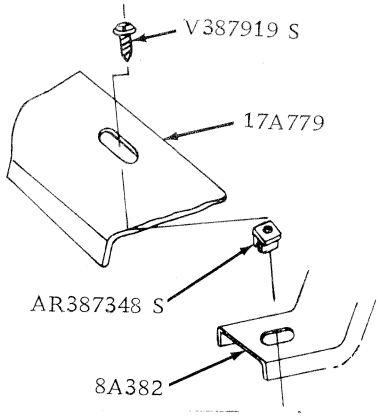

(BC)

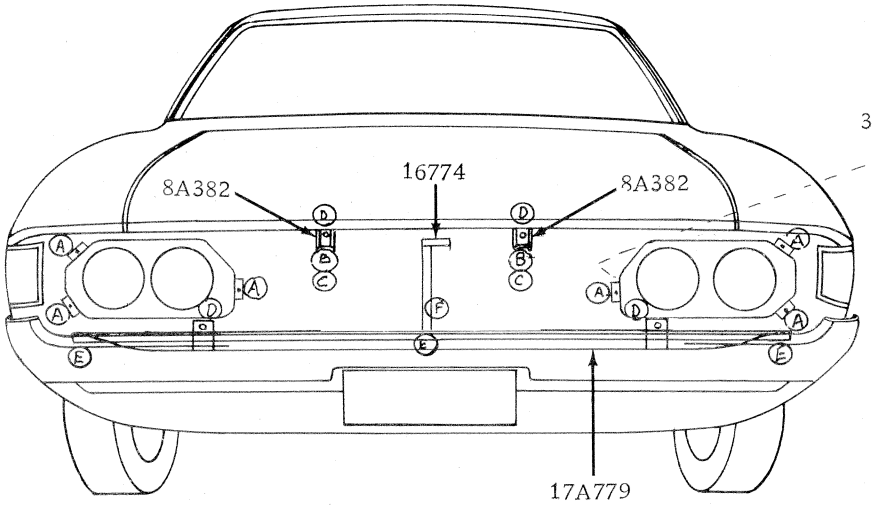

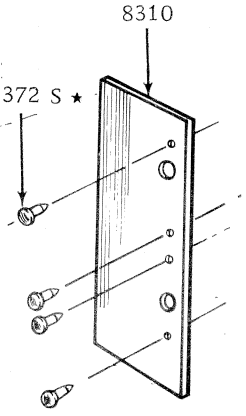

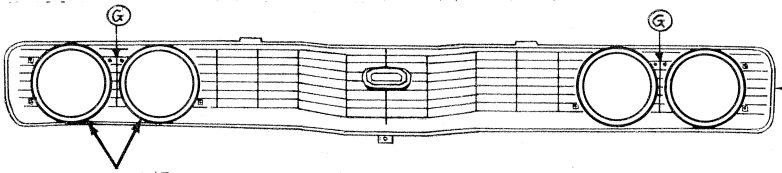

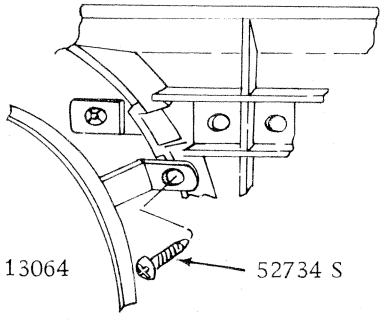

(G)

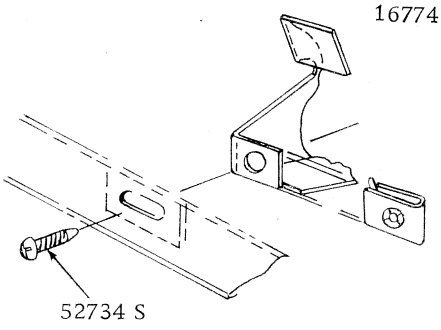

(F)

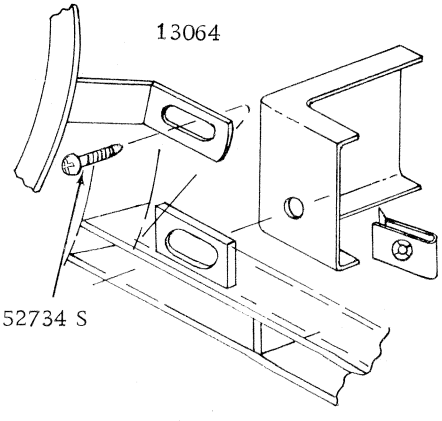

(A)

N01 15 19

RADIATOR GRILLE – FAIRLANE ZF

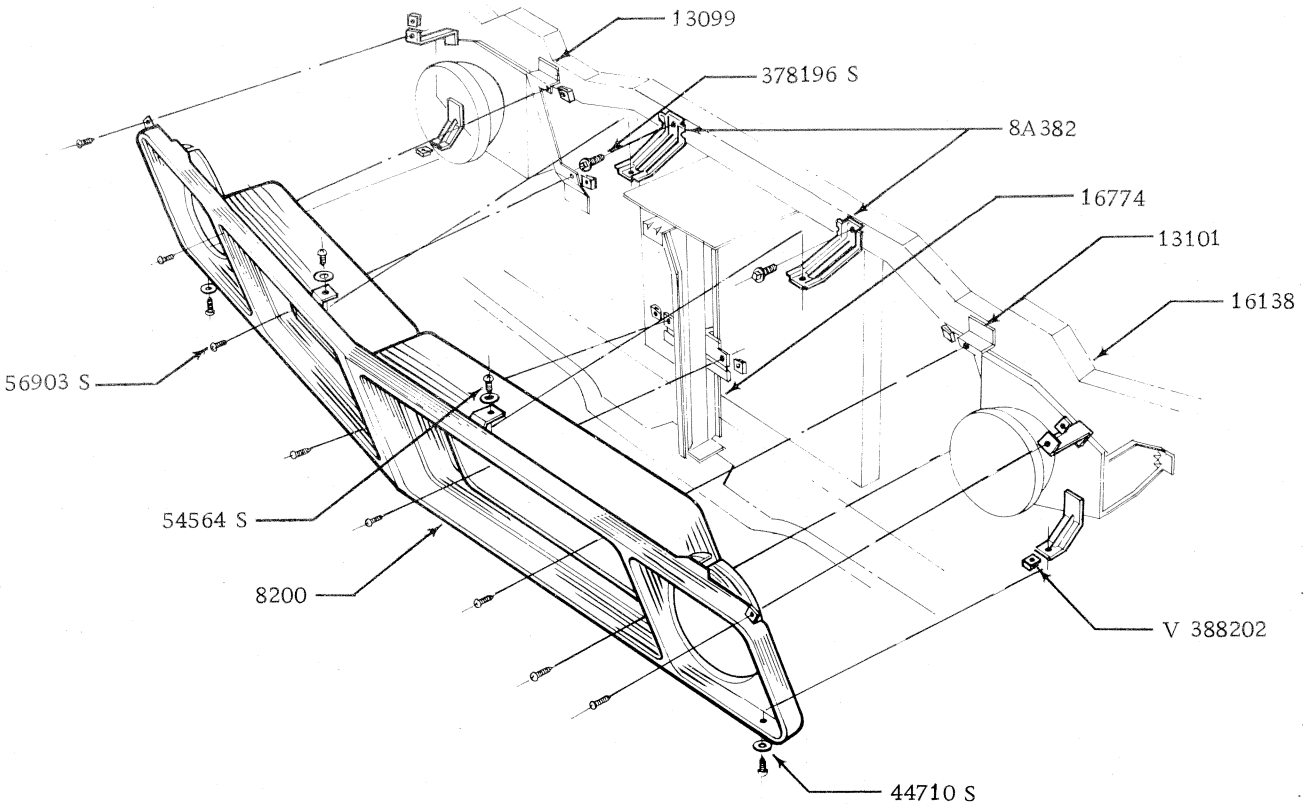

RADIATOR GRILLE – FALCON XB

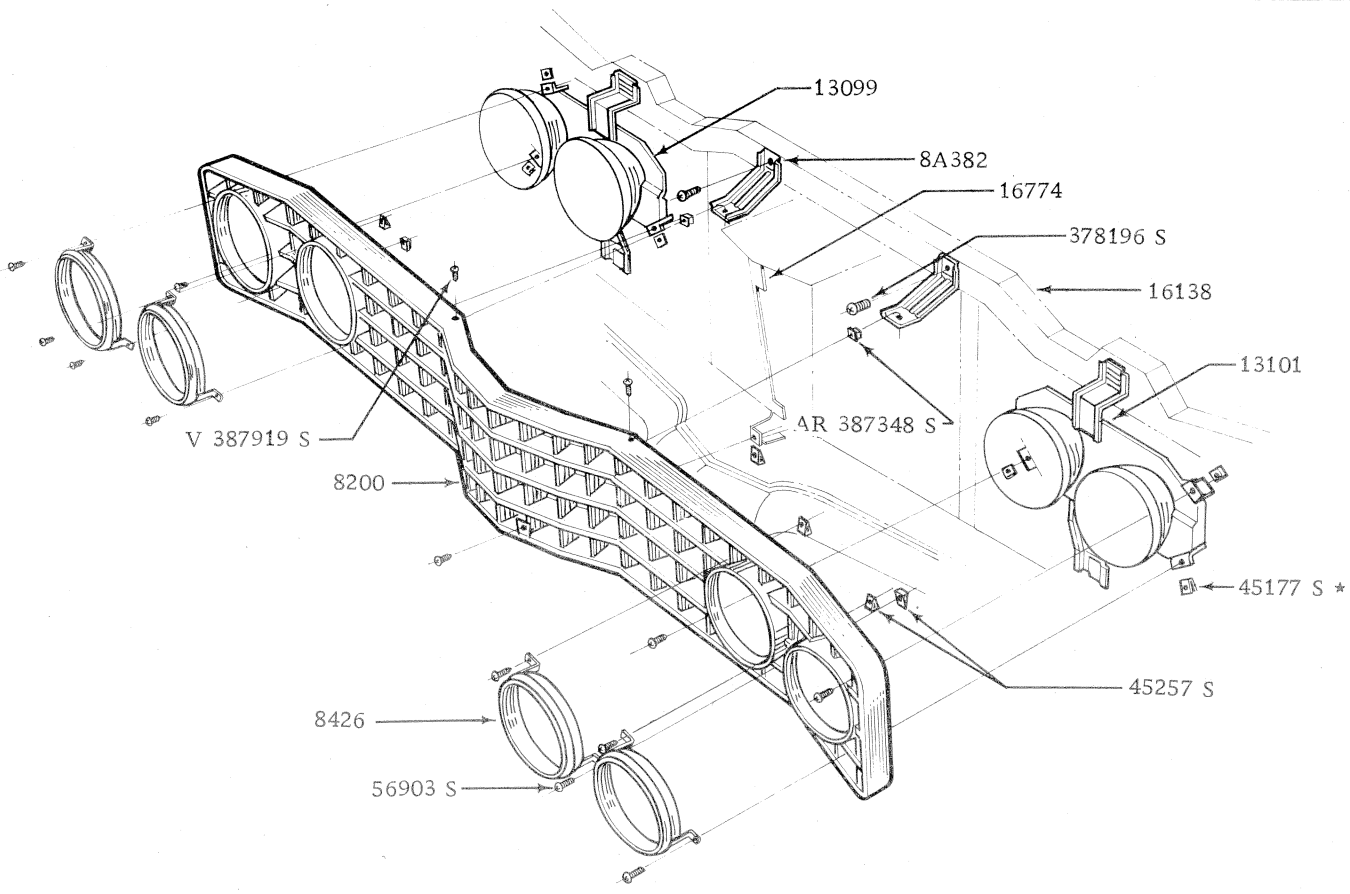

RADIATOR GRILLE – FAIRLANE ZG

WATER PUMP APPLICATION CHART

MODEL/YEAR RANGE	ENGINE	IDENTIFICATION	PART NUMBER	REPLACED BY	PARTS LIST
XA/B, ZF/G – To 9/74	6 cyl.	Cast Iron Housing	XY 8501 A	XY 8501 B	A
XB, ZG – From 9/74	6 cyl.	Aluminium Housing	XY 8501 B		B
XA/B, ZF/G	8 cyl.		D0AZ 8501 E		C

DESCRIPTION	PART NUMBER	WATER PUMP PARTS LIST "A TO L"											
		A	B	C	D	E	F	G	H	I	J	K	L
KIT – WATER PUMP REPAIR	**8591**												
	XY 8591 A	A											
	XB 8951 A		B										
	XW 8591 C			C									
Bolt – 5/16" – 18 x 2" – pump retaining – to 10/73	379862 S8	4											
Bolt – 5/16" – 18 x 2" – pump retaining – from 10/73	56126 S2	4	4										
Bolt – 5/16" – 18 x 2.91" – pump & plate retaining	383963 S			3									
Screw & washer – 5/16" – 18 x 1.75" – pump retaining – O.N.R.	57638 S			5									
HOUSING – WATER PUMP	**8505**												
Not serviced	8505	A	B	C									
Used 250 units only	D0ZX 8505 A			C									
GASKET – WATER PUMP MOUNTING	**8507**												
	C9DZ 8507 A	A											
	XB 8507 A		B										
	C5AZ 8507 B			C									
PLATE – WATER PUMP	**8508**												
	XB 8508 A		B										
IMPELLER – WATER PUMP	**8512**												
To 3/74	XY 8512 A	A											
Sintered – from 3/74	XB 8512 B	A											
Cast iron – from 3/74	XB 8512 D*	A											
	XB 8512 A		B										
	D00Z 8512 A			C									
GASKET – WATER PUMP COVER	**8513**												
	XA 8513 AA			C									
SEAT ASSY. – WATER PUMP IMPELLER	**8517**												
	XB 8517 A		B										
	C9AZ 8517 A			C									
PLATE – WATER BY-PASS	**8K517**												
	D0AZ 8K517 A			C									
BEARING ASSY. – WATER PUMP	**8530**												
	C9DZ 8530 A	A	B										
To 5/73	D2SZ 8530 A			C									
From 5/73	D2AZ 8530 A			C									

DESCRIPTION	PART NUMBER	WATER PUMP PARTS LIST "A TO L"											
		A	B	C	D	E	F	G	H	I	J	K	L
HUB – WATER PUMP PULLEY	**8553**												
	C9DZ 8553 A	A	B										
	D2VY 8553 A*			C									
TUBE – WATER PUMP BY-PASS	**8555**												
Aust. build	C5AZ 8555 A	A	B	C									
U.S. build	D00Z 8555 A			C									
SEAL ASSY. – WATER PUMP	**8564**												
To 3/74	C9DZ 8564 B	A											
From 3/74 to 9/74	D4AZ 8564 A	A											
From 9/74	XB 8564 A		B										
	B6TZ 8564 D			C									

MODEL	BODY TYPE	REMARKS	UNIT	PART NUMBER		
– – 8A500 – – CAP – WATER PUMP HOUSING						
XA/B, ZF/G	All	Without heater – water pump heater outlet blanking	a/r	C4TZ	8A500	A
– – 8509 – – PULLEY – WATER PUMP						
XA/B, ZF/G	All	6 cyl. – without A/C	1	C9AZ	8509	D*
XA/B, ZF/G	All	6 cyl. – with A/C	1	C9ZZ	8509	A
XA/B, ZF/G	All	8 cyl. – without A/C	1	C90Z	8509	B
XA/B, ZF/G	All	8 cyl. – with A/C – also with extra cooling	1	D20Z	8509	A*
XA/B, ZF/G	All	8 cyl. – without A/C – with P/S	1	C90Z	8509	D
– – 8546 – – SPACER – WATER PUMP PULLEY TO FAN						
XA/B, ZF/G	All	6 cyl.	1	C9ZZ	8546	A
XA/B, ZF/G	All	8 cyl. – without A/C	1	YA 69		
XA/B, ZF/G	All exc. 54H, 65H	8 cyl. – with A/C – also with extra cooling	1	C5TZ	8546	E
XA/B	54H, 65H	8 cyl. – with A/C	1	YA 74		
– – 8592 – – CONNECTION – WATER OUTLET						
XA/B, ZF/G	All	6 cyl. – without A/C	1	C9DZ	8592	B
XA/B, ZF/G	All	6 cyl. – with A/C – also with extra cooling	1	C9DZ	8592	A
XA/B, ZF/G	All	8 cyl.	1	D1AZ	8592	A
XA/B, ZF/G	All	6 cyl. – bolt – water outlet to cyl. head	2	45964 S8		
XA/B, ZF/G	All	6 cyl. – washer – water outlet to cyl. head	2	34806 S7		
XA/B, ZF/G	All	8 cyl. – set screw – 5/16" – 18 x 0.75" – connector to block – not serviced	2	57633 S36		
– – 8575 – – THERMOSTAT ASSY. – WATER						
XA/B, ZF/G	All	6 cyl. – 192°F	1	XY	8575	A
XA/B, ZF/G	All	8 cyl. – 192°F	1	RT 139		
– – 8600 – – BLADE ASSY. – FAN						
XA/B, ZF/G	All	6 cyl. & 302 c.i.d. – W/o A/C	1	XY	8600	AB
XA/B, ZF/G	All	250 c.i.d. – W/AC – also with extra cooling	1	C9ZZ	8600	B
XA/B, ZF/G	All	302 c.i.d. – W/AC – also with extra cooling	1	YA 17		
XA/B, ZF/G	All	351 c.i.d. – W/o A/C – 4 blades	1	C90Z	8600	B
XA/B, ZF/G	All	351 c.i.d. – W/AC – 7 blades	1	D3DZ	8600	A
XA, ZF	All	Bolt – 5/16" – 24 x 2.3 hex. hd. – attch fan to spacer & shield to manifold (2V) engines	5	45509 S8		
XA/B, ZF/G	All	Bolt – 5/16" – 24 x 3.75 hex. hd. – att. fan to spacer and pulley to water pump – 8 cyl.	4	300909 S36		
XA, ZF	All	Screw – hex. compressor to brace	9	381649 S2		
XA, ZF	All	With A/C – bolt – 5/16" – 24 x 4.00 – fan, spacer & pulley to hub	4	45563 S8		
XA	54H, 65H	Bolt – 5/16" – 24 x 3.5" – with air conditioning – fan thru spacer & pulley to water pump	1	45547 S		
– – 8A613 – – SPACER – IDLER PULLEY						
XA/B, ZF/G	All	8 cyl. – with A/C – without P/S	1	D0AZ	8A613	A
– – 8A616 – – CLUTCH ASSEMBLY – FAN						
XA/B, ZF/G	All	250 c.i.d. – W/AC – also with extra cooling	1	YB 111		
– – 8620 – – BELT – DRIVE (REFER CHART)						
XA, ZF		6 cyl. – w/pump drive – with Lucas Alternator – without a/conditioner	1	JB 423		
XA/B, ZF/G		6 cyl. – w/pump drive – with Bosch Alternator – without a/conditioner	1	JB 432		
XA/B, ZF/G		6 cyl. – w/pump drive – with a/conditioner	2	JB 470		
XA/B, ZF/G		6 cyl. – power steering drive	1	JB 461 L		
XA/B, ZF/G		8 cyl. – w/pump alternator drive – without p/steering and a/conditioner	1	JB 436 L		
XA/B, ZF/G		8 cyl. – alternator drive – with p/steering or a/conditioner	1	JB 404		
XA/B, ZF/G		8 cyl. – w/pump, p/steering drive – W/o a/conditioner ..	1	JC 517		
XA/B, ZF/G		8 cyl. – w/pump, p/steering drive – with a/conditioner ..	1	JC 507 L		
XA/B, ZF/G		8 cyl. – alternator drive – with p/steering or a/conditioner	1	JB 404		
XA/B, ZF/G		8 cyl. – w/pump, idler drive – with a/conditioner – without p/steering	1	JC 473		
XA/B, ZF/G		8 cyl. – air compressor, idler drive – with air conditioner ..	1	JC 557 L		

MODEL	BODY TYPE	REMARKS	UNIT	PART NUMBER		
– – 8A652 – – SPACER – IDLER PULLEY BRACKET						
XA/B, ZF/G	All	8 cyl. – with A/C – without P/S	1	D1AZ	8A652	A
– – 8A653 – – BRACKET ASSY. – IDLER PULLEY SUPPORT						
XA/B, ZF/G	All	8 cyl. – with A/C – without P/S	1	D20Z	8A653	A
XA/B, ZF/G	All	Stud – 7/16" – 14 x 5.88" – bracket retaining	1	383912 S2		
– – 8678 – – PULLEY ASSY. – FAN BELT IDLER						
XA/B, ZF/G	All	8 cyl. – W/AC – fixed	1	D0AZ	8678	A
XA/B, ZF/G	All	8 cyl. – W/AC – adjustable	1	D0AZ	8678	C
XA/B, ZF/G	All	Nut – 3/8" lock – pulley to eng. – 8 cyl. A/C	2	34987 S2		
XA, ZF	All	Stud – pulley to eng. – W/AC	1	377278 S2		
– – 8679 – – PULLEY – DRIVE BELT IDLER						
XA/B, ZF/G	All	8 cyl. – with A/C – without P/S	1	YS 32		
– – 8680 – – BRACKET – IDLER PULLEY MOUNTING						
XA/B, ZF/G	All	8 cyl. – with A/C – without P/S	1	YS 44		

MODEL	BODY TYPE	REMARKS	UNIT	PART NUMBER

BELT DRIVE CHART

XA/B, ZF/G

ENGINE	LENGTH	WIDTH	C/SHAFT	W/PUMP	ALT./GEN.	P/S. PUMP	A/COND. COMP.	IDLER PULLEY	IDENT.	QTY.	PART NUMBER
6 Cyl.											
ø Normal	41.75	15/32	X	X	X				D2AE/CZA	1	JB 423
W.A/Cond.	46.25	15/32	X	X	X		X		D2ZE/AKA	2	JB 470
W.P/Stg.	45.25	15/32	X			X			D2ZE/TA	1	JB 461 L
† Normal	42.50	15/32	X	X	X					1	JB 432
8 Cyl.											
Normal	42.75	15/32	X	X	X				D2AE/DBA	1	JB 436 L
W.P/Stg.	39.75	15/32	X		X				D2TE/CHA	1	JB 404
	51.25	15/32	X	X		X			D2AE/BTA	1	JC 517
A/C. W/o P/Stg.	39.75	15/32	X		X				D2TE/CHA	1	JB 404
	46.75	1/2	X	X				X	D2TE/AKA	1	JC 473
	55.75	1/2	X				X	X	D2AE/BMA	1	JC 557 L
A/C W. P/Stg.	39.75	15/32	X		X				D2TE/CHA	1	JB 404
	50.50	1/2	X	X		X			D2TE/BGA	1	JC 507 L
	55.75	1/2	X				X	X	D2AE/BMA	1	JC 557 L
Handling Option	44.38	15/32	X	X	X					1	JB 443

ø Use with Lucas Alternator

† Use with Bosch Alternator

MODEL	BODY TYPE	REMARKS	UNIT	PART NUMBER

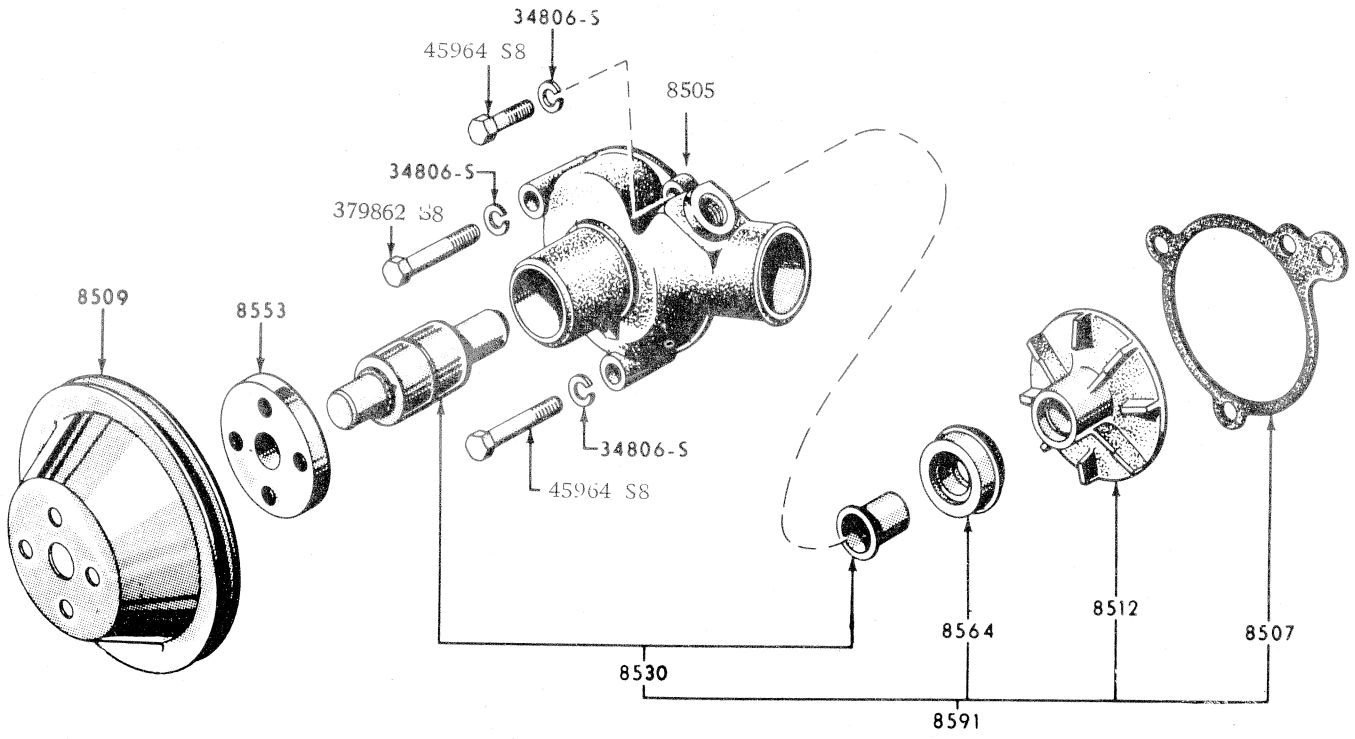

WATER PUMP 6 CYLINDER

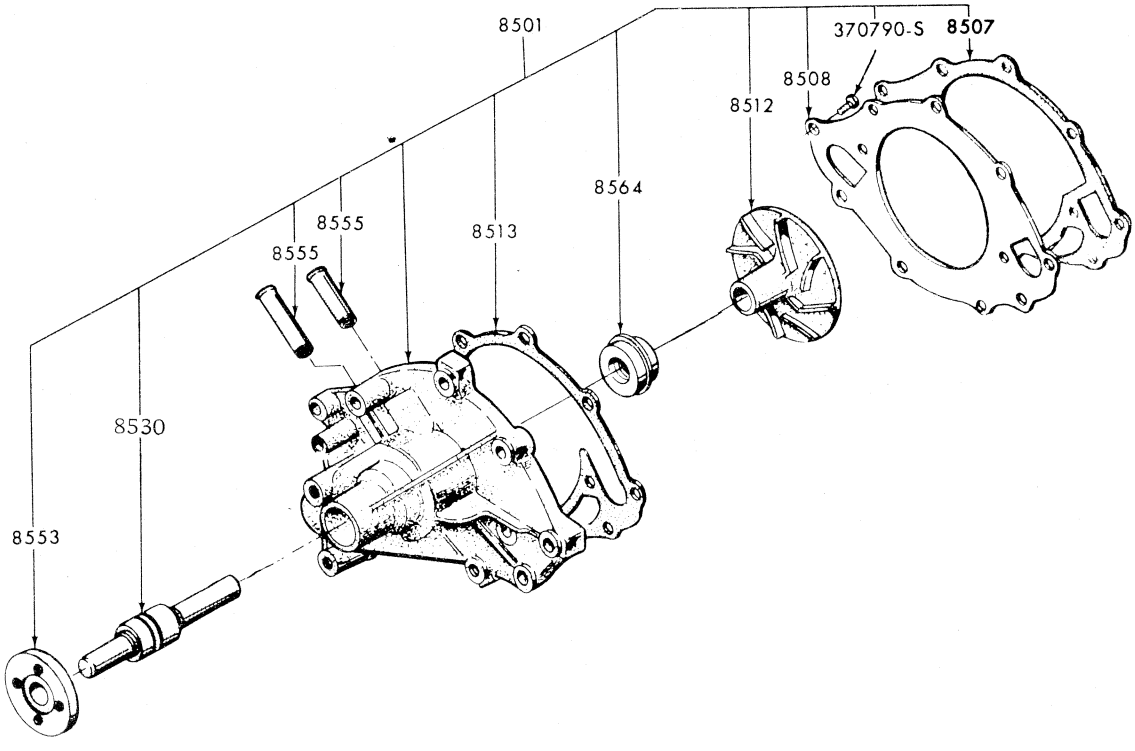

WATER PUMP 8 CYLINDER

MODEL	BODY TYPE	REMARKS	UNIT	PART NUMBER		
– – 9002 – – TANK ASSY. – FUEL						
XA/B, ZF/G	54, 65	To 12/74	1	XA	9002	A
XB, ZG	54, 65	Std. – from 12/74	1	XB	9002	F*
XB, ZG	54, 65	Extra capacity – from 12/74	1	XB	9002	D*
XA/B	66, 78	To 12/74	1	XA	9002	C
XB	66, 78	From 12/74	1	XB	9002	C*
XA/B	71	Without aux. rear seats – to 12/74	1	XA	9002	B
XB	71	Without aux. rear seats – from 12/74	1	XB	9002	B*
XB	71	With aux. rear seats – to 12/74	1	XB	9002	A
XB	71	With aux. rear seats – from 12/74	1	XB	9002	E*
XA/B, ZF/G	All	Screw – ¼" x 20 – fuel tank frt. flange to pan centre floor	16	370675 S2		
– – 9030 – – CAP ASSY. – FUEL TANK FILLER						
XA/B	54A,B,C,D, 66, 71, 78	Non locking – chromed – to 12/74	1	AFC 5		
XB	54A,B,C,D, 66, 71, 78	Non locking – chromed – from 12/74	1	AFC 15*		
XA/B	54A,B,C,D, 66, 71, 78	Locking – chromed – to 12/74	1	AFC 55		
XB	54A,B,C,D, 66, 71, 78	Locking – chromed – from 12/74	1	AFC 73*		
XA/B	65B,D	Locking – primed – to 12/74	1	AFC 55 P		
XB	65B,D	Locking – primed – from 12/74	1	AFC 72*		
XA/B	54H, 65H	Non locking – chromed – to 12/74	1	XA	9030	BA
XB	54H, 65H	Non locking – chromed – from 12/74	1	AFC 16*		
ZF/G	All	Non locking – zinc plated – to 12/74	1	AFC 13		
ZG	All	Non locking – zinc plated – from 12/74	1	AFC 17*		
ZF/G	All	Locking – chromed – to 12/74	1	AFC 53		
ZG	All	Locking – chromed – from 12/74	1	AFC 14*		
XA/B	54H, 65H	Nut – No. 10 – 24 – cap to qtr. panel	4	55731 S40		
– – 9034 – – PIPE ASSY. – FUEL TANK FILLER						
XA/B	54A,B,C,D,	To 12/74	1	XA	9034	A
XA/B	54H	To 12/74	1	XA	9034	EA
XB	54A,B,C,D,H	From 12/74	1	XB	9034	A*
ZF/G	54	To 12/74	1	ZF	9034	A
ZG	54	From 12/74	1	ZG	9034	A*
XA/B	65B,D	To 12/74	1	XA	9034	FA
XA/B	65H	To 12/74	1	XA	9034	DA
XB	65	From 12/74	1	XB	9034	D*
XA/B	71	To 12/74	1	XA	9034	B
XB	71	From 12/74	1	XB	9034	B*
XA/B	66, 78	To 12/74	1	XA	9034	C
XB	66, 78	From 12/74	1	XB	9034	C*
XA/B, ZF/G	All exc. 54H, 65H	Screw – No. 10 – 16 x 3/8" tapping – pipe & gasket to qtr. panel	4	42360 S36		
– – 9035 – – GASKET – FUEL FILLER CAP						
XA/B	54H, 65H		1	XA	9035	A
– – 9041 – – PIPE – FUEL TANK FILLER LOWER						
XA/B	66, 78		1	XA	9041	F
XA/B	71		1	XA	9041	C
– – 9047 – – HOSE – FUEL TANK FILLER						
XA/B, ZF/G	54, 65		1	ARC6DA	9047	D
XA/B	71, 66, 78		2	XA	9047	A
XA/B, ZF/G	All	Clamp – 2-5/8" dia. – hose to filler tube and tank	a/r	R7 24		
– – 9049 – – TUBE – FUEL TANK VENT						
XB, ZG	54, 65	From 12/74	1	XB	9049	A*
XB	71	From 12/74	1	XB	9049	B*
XA/B	66, 78	To 12/74	1	XA	9049	B
XB	66, 78	From 12/74	1	XB	9049	C*
– – 9056 – – SUPPORT ASSY. – FUEL TANK SIDE						
XA/B	66, 78		1	XA	9056	A
– – 9076 – – GASKET – FUEL FILLER PIPE FLANGE SEALING						
ZG	54	From 12/74	1	ZG	9076	A*

MODEL	BODY TYPE	REMARKS	UNIT	PART NUMBER		
– – 9080 – – GROMMET – FUEL TANK FILLER PIPE						
XA/B	71		2	ARC6DB	9080	A
– – 9099 – – GUARD ASSY. – FUEL TANK – H/DUTY DUST PACK						
XA/B, ZF/G	All		1	XA	9099	AA
XA/B, ZF/G	All	Bolt – ¼" – 20 x .875" – guard assy. to floor pan	4	20364 S7		
XA/B, ZF/G	All	Lockwasher ¼" dia.	4	34805 S78		
XA/B, ZF/G	All	Flatwasher ¼" dia.	4	44719 S78		
XA/B, ZF/G	All	Nut ¼" – 20 – guard assy. to floor pan	4	33795 S7		
– – 9K105 – – COVER – FUEL TANK VENT PIPE						
XB, ZG	All	From 12/74	1	XB	9K105	A*
– – 9A129 – – HOSE – FUEL TANK OVERFLOW						
ZF/G	All		1	ARC60B	9A129	A
– – 9155 – – FILTER ASSY. – FUEL						
XA/B, ZF/G	All	250 c.i.d. – to 12/73	1	XY	9155	AA
XA/B, ZF/G	All	302 c.i.d. – to 12/73	1	XA	9155	A
XB, ZG	All	250/302 c.i.d. – from 12/73	1	AFG 2		
XA/B, ZF/G	All	351 c.i.d. – to 12/74	1	FG 14		
XA/B	54H, 65H	351 c.i.d. – use with D3FF-9510-KA/LA	1	FG 14 A		
XA/B, ZF/G	All	250 c.i.d. – connector ½" – 20 x ½" – 20 – att. filter (9155) to tube (9369)	1	358283 S		
– – 9170 – – HOSE – FUEL TANK VENT CONNECT						
XA/B	66, 78	To 12/74	2	XA	9170	A
XB, ZG	All	From 12/74	2	XA	9170	A
XA/B, ZF/G	All	Clip – hose retaining	a/r	R7 21		
– – 9A195 – – CONNECTOR – FUEL TANK VENT TUBES						
XB	54, 65	From 12/74	1	XB	9A195	A*
XB	71	From 12/74	1	XB	9A195	B*
XB	66, 78	From 12/74	1	XB	9A195	C*
ZG	54	From 12/74	1	ZG	9A195	A*
– – 9A228 – – TUBE – FUEL TANK VENT TO STORAGE CANNISTER						
XB	54, 65	From 12/74	1	XB	9A228	A*
XB	71	From 12/74	1	XB	9A228	B*
XB	66, 78	From 12/74	1	XB	9A228	C*
ZG	54	From 12/74	1	ZG	9A228	A*
– – 9273 – – BODY, POINTER & DIAL ASSY. – OIL PRESSURE						
XA/B	54H, 65H	Also all with rally pack	1	XA	9273	A
XA/B	54H, 65H	Metric – to 6/74	1	XA	9273	B
XB	54H, 65H	Metric – from 6/74	1	XB	9273	A*
– – 9275 – – SENDER & OUTLET TUBE ASSY. – FUEL TANK						
XA/B, ZF/G	54, 65	With std. tank – to 12/74	1	XA	9275	A
XB, ZG	54, 65	With std. tank – from 12/74	1	XB	9275	D*
XA	54, 65	With large capacity tank	1	XW	9275	D
XB, ZG	54, 65	With large capacity tank – from 12/74	1	XB	9275	C*
XA/B	66, 78	To 12/74	1	XA	9275	C
XB	66, 78	From 12/74	1	XB	9275	B*
XA/B	71	To 12/74	1	XA	9275	B
XB	71	From 12/74	1	XB	9275	AA*
– – 9C275 – – HOSE – FUEL TUBE INTERMEDIATE						
XB, ZG	All	6 cyl. – from 12/74	1	C3SA	9C275	A*
XB, ZG	All	8 cyl. – from 12/74	1	XB	9C275	A*
– – 9276 – – GASKET – FUEL TANK SENDER						
XA/B, ZF/G	All		1	CJ	9276	A
– – 9278 – – SWITCH ASSY. – OIL PRESSURE SENDER						
XA/B, ZF/G	All	Exc. rally pack	1	XA	9278	A
XA/B	54H, 65H	Also all with rally pack	1	XW	9278	A
– – 9A284 – – DIAL – FUEL & TEMP. INDICATOR						
XA/B	All exc. 54H, 65H		1	XA	9A284	A

MODEL	BODY TYPE	REMARKS	UNIT	PART NUMBER	
-- 9C287 -- HOSE – FUEL VAPOUR					
XB, ZG	All	From 12/74	1	XB 9C287	A*
-- 9288 -- HOSE – FUEL TUBE CONNECTOR (REFER 9324)					
-- 9F299 -- GASKET – FUEL TANK VENT CONNECTOR					
XB, ZG	All	From 12/74	1	XB 9F299	A*

MODEL	BODY TYPE	REMARKS	UNIT	PART NUMBER

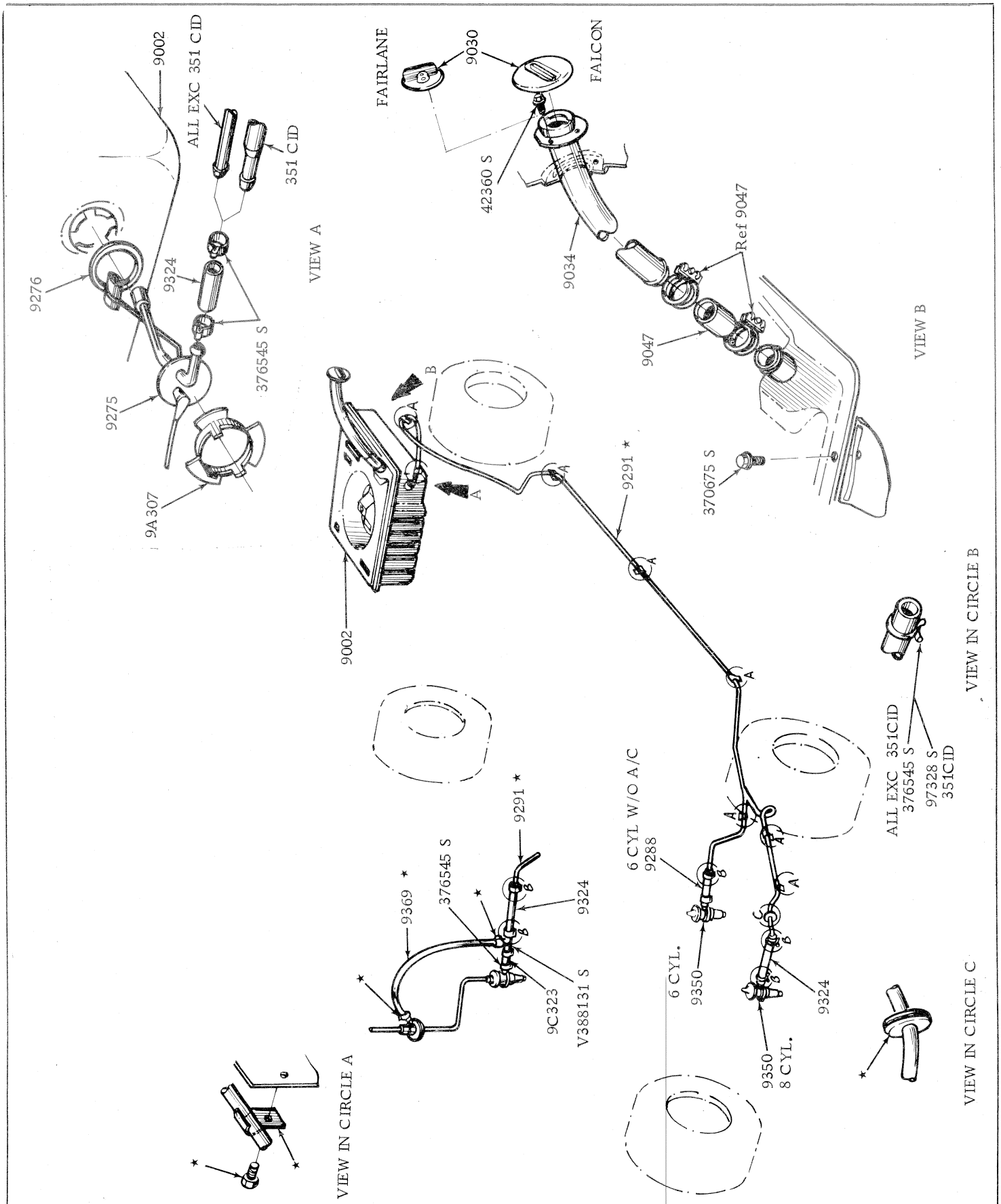

FUEL SYSTEM – BODY TYPES 54A, B, C, D, E, G, 65B, D. – TO 12/74

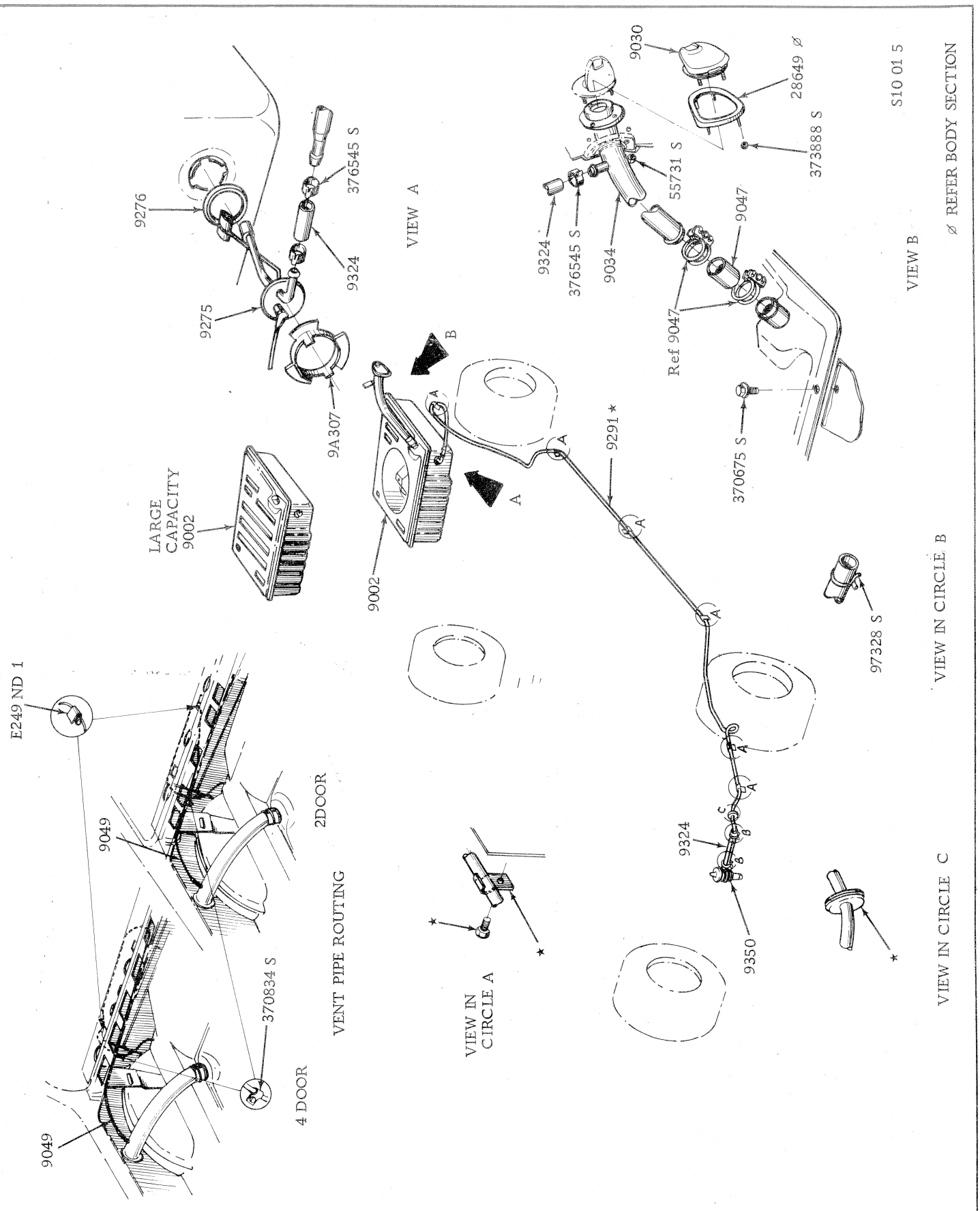

FUEL SYSTEM – BODY TYPES 54H, 65H. – TO 12/74

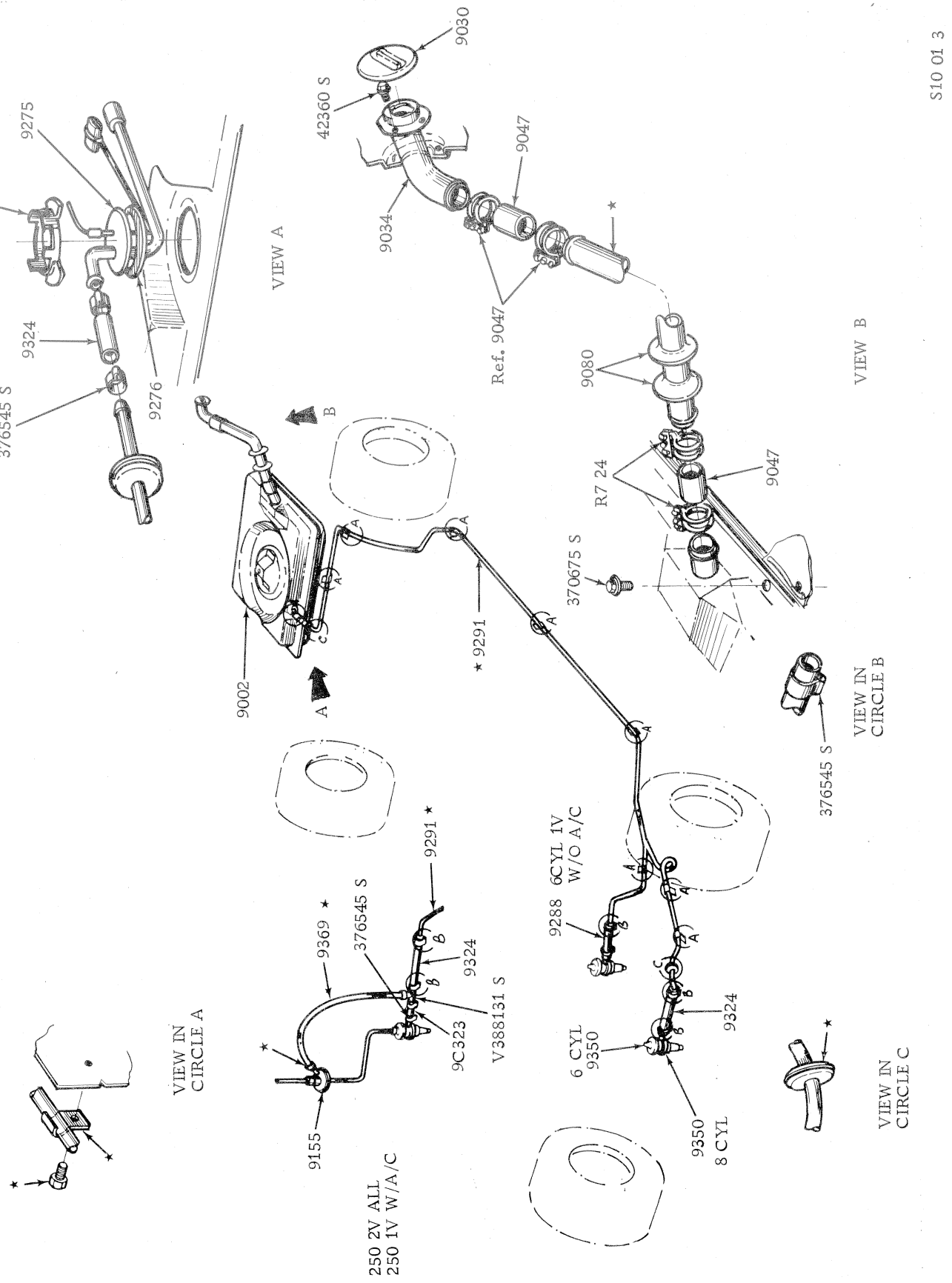

FUEL SYSTEM – BODY TYPE 71 – TO 12/74

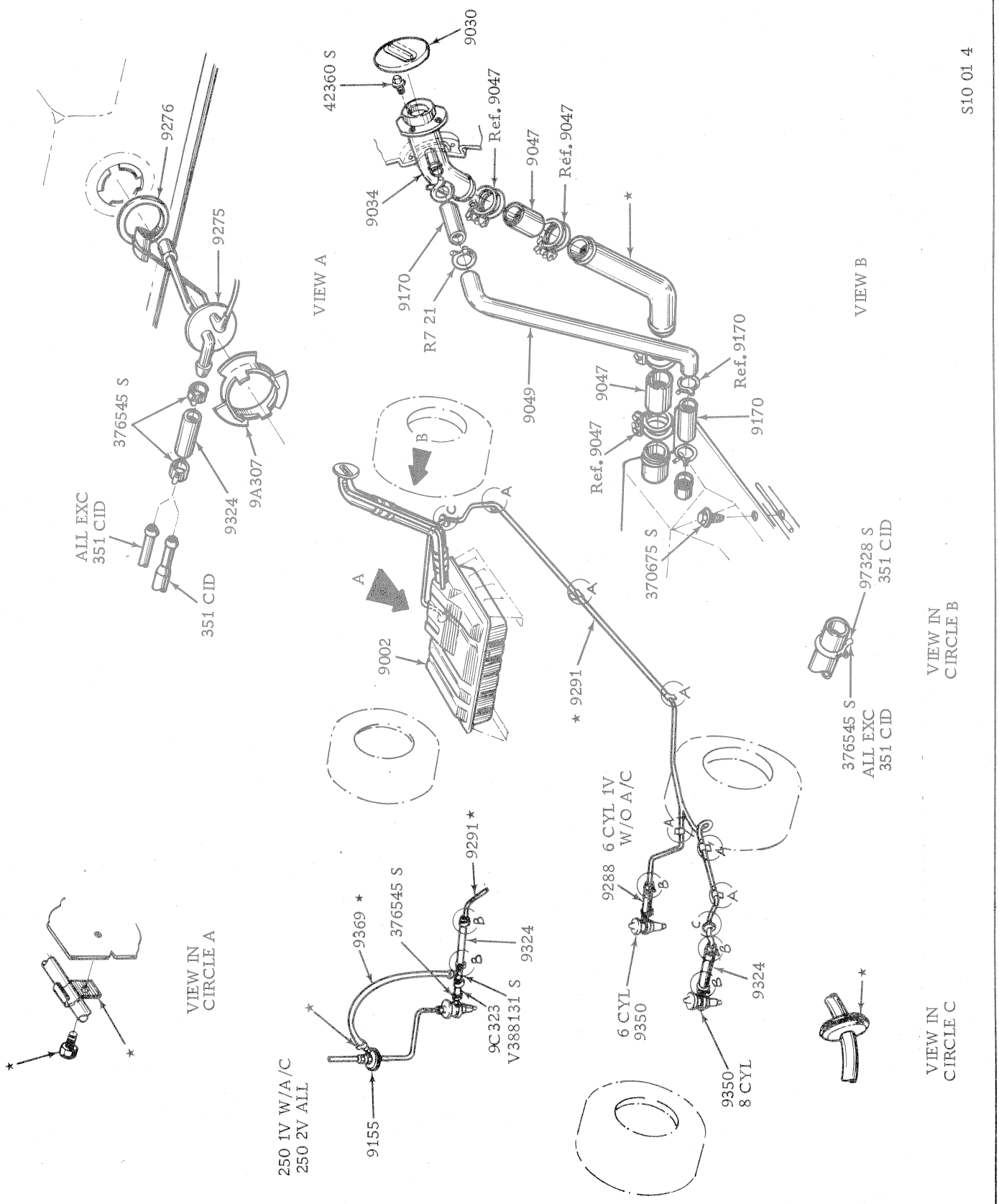

FUEL SYSTEM – BODY TYPES 66, 78. – TO 12/74

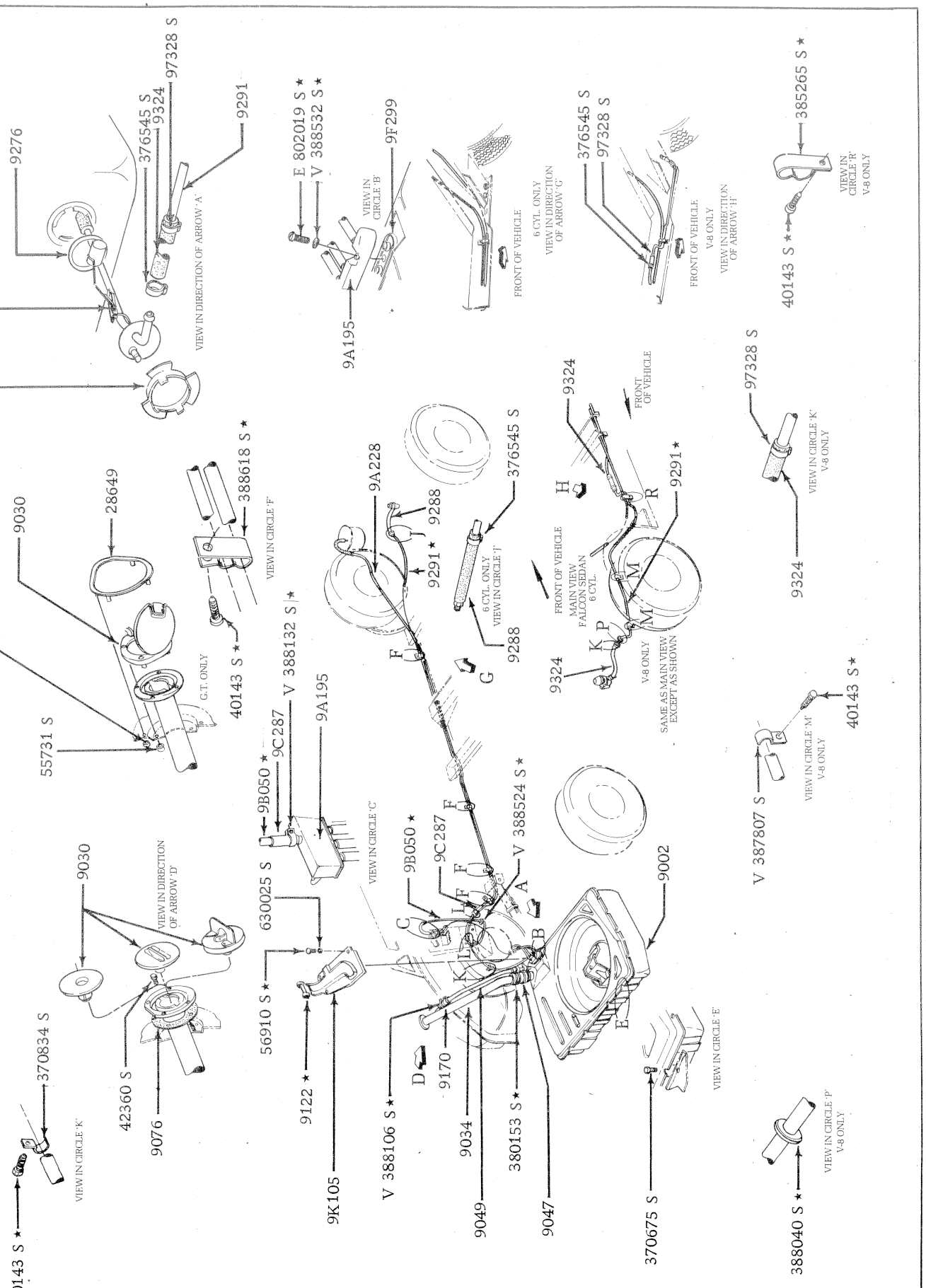

FUEL SYSTEM – BODY TYPES 54, 65. – FROM 12/74

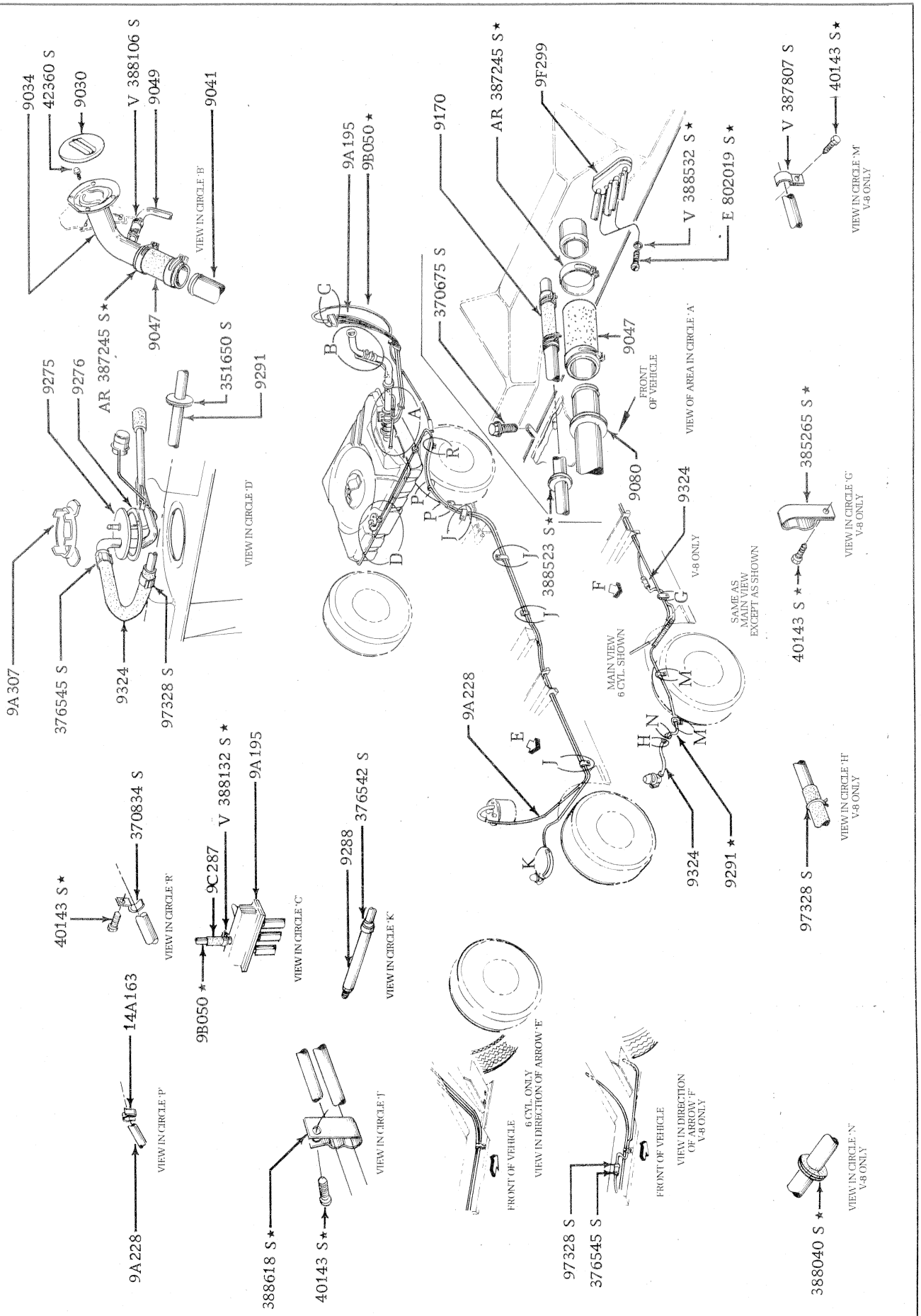

FUEL SYSTEM – BODY TYPE 71 – FROM 12/74

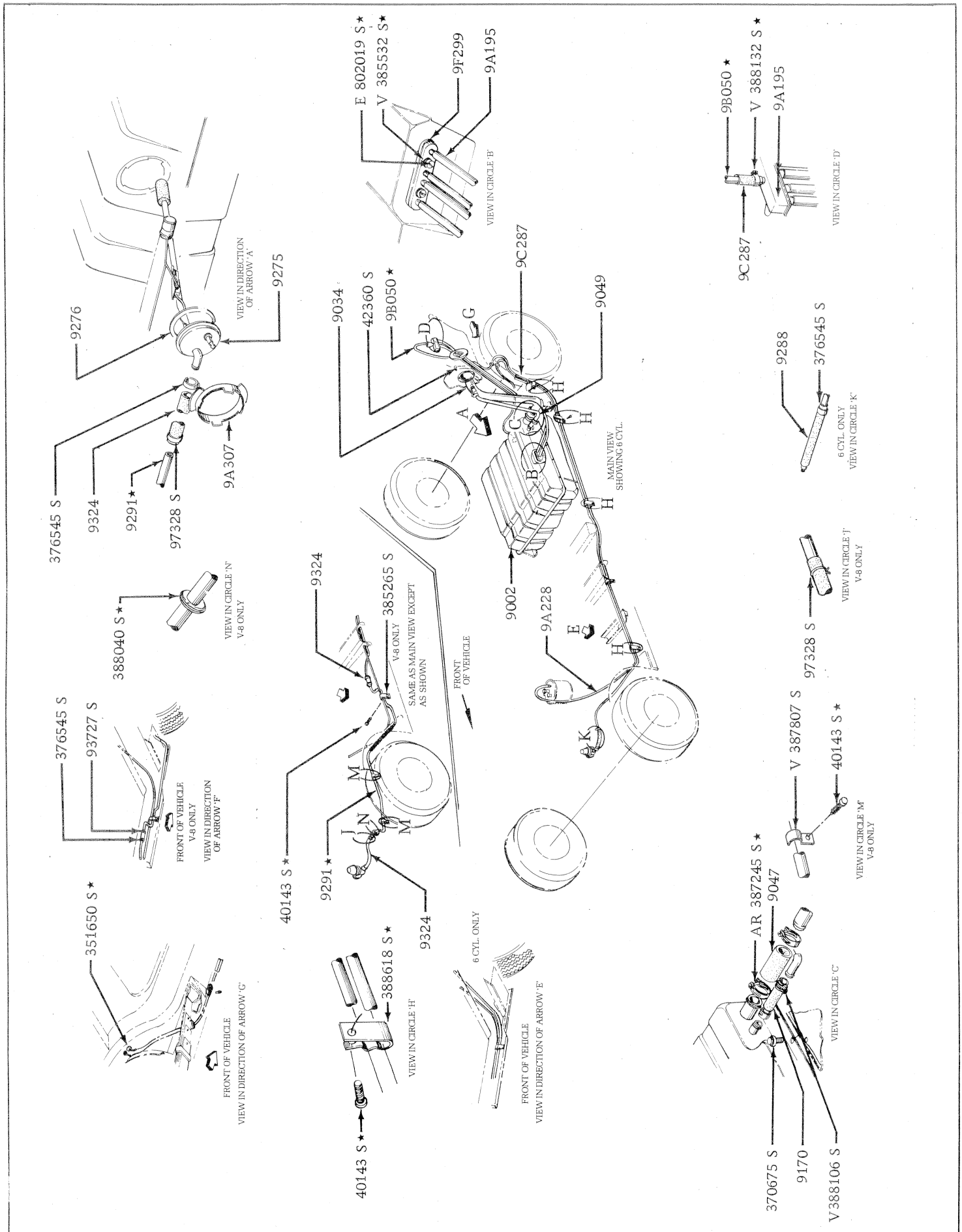

FUEL SYSTEM – BODY TYPES 66, 78. – FROM 12/74

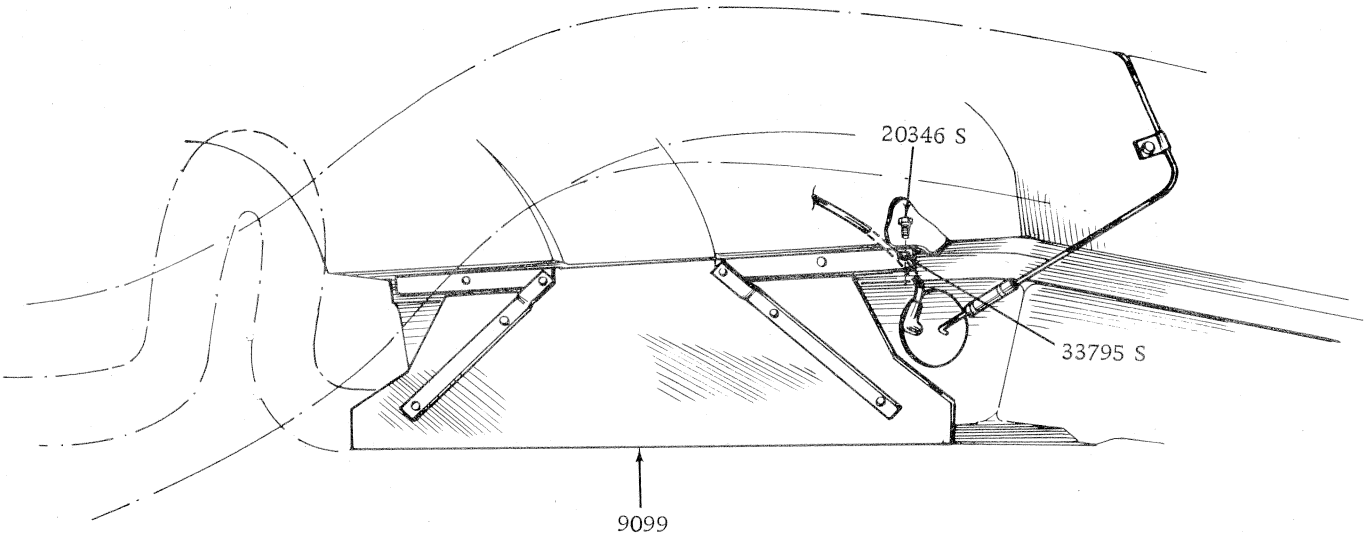

FUEL TANK GUARD - SEDAN HEAVY DUTY DUST PACKAGE

FUEL PUMP APPLICATION CHART

MODEL/ YEAR RANGE	ENGINE	REMARKS	FUEL PUMP TYPE	IDENTIFICATION	PART NUMBER	REPLACED BY	PARTS LIST
XA/B, ZF/G	200/250 c.i.d. 1V	Without A/C	Bendix	Blue Paint Spot	XY 9350 AA		A
XA/B, ZF/G	250 c.i.d. 1V	With A/C	Carter — Sealed	4532-S	C8DZ 9350 A	D3TZ 9350 A	B
XA, ZF	250 c.i.d. 2V		Carter. — Sealed	4532-S	C8DZ 9350 A	D3TZ 9350 A	B
XA/B, ZF/G	302/351 c.i.d.		Carter — Sealed	4861-S	D0AZ 9350 A		C

DESCRIPTION	PART NUMBER	FUEL PUMP PARTS LIST "A TO L"											
		A	B	C	D	E	F	G	H	I	J	K	L
KIT — REPAIR	**9349**												
	ARC6DZ 9349 A	A											
Screw — 5/16" — 18 x 1.25" — pump retaining	304720 S36	2	2										
Screw — 5/16" — 18 x 1-1/8" — pump retaining	358805 S7			C									
Stud — 5/16" — 18 x 1½" — pump retaining	383751 S			C									
Nut — 5/16" — 18 — pump retaining	55736 S2			2									
Washer — 5/16" — pump retaining	34806 S36			2									
COVER — FUEL PUMP	**9343**												
	ARC6DZ 9343 A	A											
VALVE ASSY.	**9352**												
	ARC6DZ 9352 A	2											
BOWL	**9355**												
	ARC6DZ 9355 A	A											
PLUG — ROCKER ARM PIN	**9A360**												
	ARC6DZ 9A360 A	2											
GASKET — BOWL	**9364**												
	ARC6DZ 9364 A	A											
	C2AZ 9364 A		B										
SCREEN ASSY.	**9365**												
	ARC6DZ 9365 A	A											
GASKET — VALVE	**9367**												
	ARC6DZ 9367 A	2											
WASHER — DIAPHRAGM SPRING SEAT	**9371**												
	ARC6DZ 9371 A	A											
ARM ASSY. — ROCKER	**9376**												
	ARC6DZ 9376 A	A											
PIN — ROCKER ARM	**9378**												
	ARC6DZ 9378 A	A		C									
SPRING — ROCKER ARM	**9380**												
	ARC6DZ 9380 A	A		C									

DESCRIPTION	PART NUMBER	FUEL PUMP PARTS LIST "A TO L"											
		A	B	C	D	E	F	G	H	I	J	K	L
LINK	**9381**												
	ARC6DZ 9381 A	A											
BAIL ASSY.	**9387**												
	ARC6DZ 9387 A	A											
OIL SEAL	**9A393**												
	ARC6DZ 9A393 A	A											
SPRING – DIPAHRAGM	**9396**												
	XY 9396 A	A											
ROD & DIAPHRAGM ASSY.	**9398**												
	ARC6DZ 9398 A	A											
BODY – FUEL PUMP	**9413**												
	ARC6DZ 9413 A	A											

MODEL	BODY TYPE	REMARKS	UNIT	PART NUMBER		
– – 9305 – – BODY POINTER & DIAL ASSY. – FUEL LEVEL INDICATOR						
XA/B	All exc 54H, 65H	W/o rally pack	1	XA	9305	A
XA/B	54H, 65H	Also all with rally pack	1	XA	9305	B
ZF/G	All		1	ZF	9305	A
– – 9A307 – – RING – FUEL TANK SENDER RETAINER LOCKING						
XA/B, ZF/G	All		1	C0AF	9A307	C
– – 9C323 – – HOSE – FUEL TUBE (ALSO REFER 9324)						
XB,ZG	All	302/351 c.i.d.	1	C1AE	9C323	A
XB,ZG	All	200 c.i.d. – from 1/74	1	C1AE	9C323	A
– – 9324 – – HOSE – FUEL TUBE CONNECTOR						
XA/B, ZF/G	54, 65	Fuel tube to tank	1	C20A	9324	B
XA/B	71	Fuel tube to tank – to 12/74	1	C20A	9324	B
XB,ZG	71	Fuel tube to tank – from 12/74	1	C60Z	9324	B*
XA/B, ZF/G	All	200 c.i.d. 1V – fuel tube to pump	1	ARC6DA	9288	A
XA/B, ZF/G	All	250 c.i.d. 2V & 250 c.i.d. 1V W/AC – fuel tube to pump	1	XY	9324	BA
XA/B, ZF/G	All	302 c.i.d. – fuel tube to pump – to 12/74	1	XY	9324	BA
XA/B, ZF/G	54,65,66	351 c.i.d. – fuel tube to pump	1	XW	9324	BA
XA/B	54H, 65H	Fuel tank vent to adaptor – to 12/74	1	C20A	9324	A
XA/B	66, 78	Fuel tube to tank	1	C20A	9324	A
XA/B, ZF/G	All	Clip – hose to fuel tube & fuel pump	a/r	376545 S8		
XB,ZG	All	Clamp – hose to tube	2	97328 S35		
– – 9324 – – HOSE – UNIVERSAL FUEL TUBE						
XA/B, ZF/G	All	3/8" I.D. – 11/32" O.D. – 5 ft. long	a/r	AKFL 1*		
XA/B, ZF/G	All	5/16" I.D. – 9/32" O.D. – 5 ft. long	a/r	AKFL 2*		
XA/B, ZF/G	All	¼" I.D. – 3/16" O.D. – 5 ft. long	a/r	AKFL 3*		
– – 9B339 – – FITTING – OIL PRESSURE SENDER						
XA/B	All	Rally pack	1	D1UZ	9B339	A
– – 9369 – – TUBE ASSY. – FUEL PUMP TO CARBY.						
XA/B, ZF/G	All	Not serviced – cut from EM 900 D5	1		9369	
XA/B, ZF/G	All	6 cyl. – connector 5/16" – 20 x ½ tube to fuel pump	a/r	87972 S		
– – 9417 – – GASKET – FUEL PUMP MOUNTING						
XA/B, ZF/G	All	6 cyl.	1	XW	9417	A
XA/B, ZF/G	All	8 cyl.	1	D0AZ	9417	A
– – 9424 – – MANIFOLD ASSY. – INTAKE						
XA, ZF	All	250 c.i.d. 2V	1	XY	9424	BE
XA/B, ZF/G	All	302 c.i.d.	1	XA	9424	B
XA/B, ZF/G	All	351 c.i.d. 2V	1	XA	9424	A
XA/B	54H, 65H	351 c.i.d. 4V Aust. build – small port.	1	XA	9424	CA
XA/B	54H, 65H	351 c.i.d. 4V U.S. build – large port.	1	D0AZ	9424	C
XA/B	All	GTHO	1	XW	9424	H
XA/B	54H, 65H	Used 250 units	1	D1ZX	9424	DA
XA/B, ZF/G	All	8 cyl. – screw & washer 3/8" – 16 x 2.25" – att. intake manifold to cyl. head	8	56145 S2		
XA/B, ZF/G	All	8 cyl. – bolt 5/16" – 18 x 3.75" – att. thermo choke tube & intake manifold to cyl. head	2	56133 S		
XA/B, ZF/G	All	6 cyl. 1V plug – 3/8" – 18 plug vacuum hole in intake manifold	1	87710 S		
XA/B	54H, 65H	Set screw – 5/16 – 18 x .75" bracket to intake manifold	1	358718 S43		
– – 9B425 – – ELBOW – INLET MANIFOLD						
XA,ZF	All	250 c.i.d. 2V	1	XY	9B425	A
– – 9C425 – – HOSE – WATER HEATER MANIFOLD						
XA,ZF	All	250 c.i.d. 2V – inlet	1	XA	9C425	AA
XA,ZF	All	250 c.i.d. 2V – outlet	1	XA	9C425	B
– – 9430/1 – – MANIFOLD – EXHAUST						
XA/B, ZF/G	All	200/250 c.i.d. 1V	1	ARC6DE	9430	C
XA,ZF	All	250 c.i.d. 2V	1	XA	9430	B
XA/B, ZF/G	All	R.H. – 302/351 c.i.d. 2V – Aust. build – to 12/73	1	XA	9430	AA
XA/B, ZF/G	All	R.H. – 351 c.i.d. 4V – Aust. build – to 12/73	1	XA	9430	A
XB,ZG	All	R.H. – 302/351 c.i.d. – Aust. build – from 12/73	1	XA	9430	BA
XA/B, ZF/G	All	L.H. – 302/351 c.i.d. – Aust. build	1	XA	9431	A

MODEL	BODY TYPE	REMARKS	UNIT	PART NUMBER		
– – 9430/1 – – MANIFOLD – EXHAUST (Continued)						
XA,ZF	All	R.H. – 351 c.i.d. 4V – U.S. build	1	XA	9430	C
XA,ZF	All	L.H. – 351 c.i.d. 4V – U.S. build	1	D0AZ	9431	B
XA/B	65H	Front – R.H. – extractor type	1	XA	9B430	A
XA/B	65H	Rear – R.H. – extractor type	1	XA	9C430	A
XA/B	65H	Front – L.H. – extractor type	1	XA	9B431	A
XA/B	65H	Rear – L.H. – extractor type	1	XA	9C431	A
XA,ZF	All	Stud – 7/16 – 14 x 2.25"	3	380345 S100		
XA/B, ZF/G	All	6 cyl. – bolt – 3/8" – 16 x 1-1/8" – manifold to head	6	20408 S2		
XA,ZF	All	250 c.i.d. 2V – bolt – 3/8" – 16 x 7/8" – manifold to cyl. head	11	20368 S		
XA,ZF	All	250 c.i.d. 2V – washer – 3/8" lock – manifold to head	17	378881 S		
XA/B, ZF/G	All	8 cyl. – screw & washer 3/8 – 16 x 1.88" – att. exhaust manifold to cyl. head	8	381731 S		
XA/B, ZF/G	All	8 cyl. – bolt – att. manifold to head	8	20428 S2		
XA/B, ZF/G	All	8 cyl. – bolt – att. manifold to head	8	20522 S8		
XA/B, ZF/G	All	8 cyl. – washer – att. manifold to head – not serviced – use standard hardware	16	381385 S		
XA/B, ZF/G	All	6 cyl. – bolt – 3/8 – 16 x 2½" manifold to head	5	45522 S		
– – 9A431/2 – – GASKET – EXHAUST						
XA,ZF	All	250 c.i.d. – 2V outer	4	XY	9A431	A
XA,ZF	All	250 c.i.d. – 2V inner	1	XY	9A432	A
– – 9B430/1 – – MANIFOLD – EXHAUST FRONT (REFER 9430/1)						
– – 9C430/1 – – MANIFOLD – EXHAUST REAR (REFER 9430/1)						
– – 9433/9461 – – GASKET – INTAKE MANIFOLD						
XA,ZF	All	250 c.i.d. 2V	2	XY	9461	A
XA/B, ZF/G	All	302 & 351 2V	1	D0AZ	9433	B
XA/B	54H, 65H	351 4V	1	D0AZ	9433	A
XA/B, ZF/G	All	8 cyl. – dowel – locate gasket – O.N.R.	2	73227 S		
– – 9A434 – – HEAT SHIELD – MANIFOLD TO STARTER MOTOR						
XA,ZF	All	250 c.i.d. 2V	1	XY	9A434	AA
XA,ZF	All	250 c.i.d. 2V – washer – 5/16" flat – shield to manifold	a/r	44723 S8		
– – 9A435 – – CLAMP – SHIELD – MANIFOLD TO STARTER MOTOR						
XA,ZF	All	250 c.i.d. 2V	1	XY	9A435	AA
– – 9447 – – GASKET – CARBURETTOR TO INTAKE MANIFOLD						
XA/B, ZF/G	All	302 c.i.d. – carby to manifold	1	XA	9447	BA
XA/B, ZF/G	All	302 c.i.d. – spacer to manifold	1	C3AZ	9447	B
XA/B, ZF/G	All	351 c.i.d. 2V – carby to manifold – to 12/74	1	XA	9447	AA
XA/B, ZF/G	All	351 c.i.d. 2V – spacer to manifold	1	CG	259	
XA/B	54H, 65H	Carby to manifold	1	CG 260		
XA/B	54H, 65H	GTHO	2	CG 288		
– – 9450 – – GASKET – EXHAUST MANIFOLD TO MUFFLER INLET PIPE						
XA/B	54H, 65H	Also OSO G 6002	1	C8AZ	9450	B
XA/B, ZF/G	All	6 & 8 cyl. – C4 trans.	1	C6AZ	9450	D
– – 9455 – – GASKET – CARBURETTOR TO SPACER						
XA/B, ZF/G	All	200/250 c.i.d. 1V – to 12/74	1	XW	9455	A
XB, ZG	All	200/250 c.i.d. 1V – from 12/74	1	XB	9455	A*
XA/B, ZF/G	All	250 c.i.d. 2V & 302 c.i.d.	1	XW	9455	B
– – 9461 – – GASKET – INTAKE MANIFOLD TO HEAD (REFER 9433)						
– – 9A474 – – FITTING ASSY. – INTAKE MANIFOLD VACUUM OUTLET						
XA/B, ZF/G	All	1 port – 7/8" long	1	AR 387222 S		
XA/B, ZF/G	All	2 port – 1¼" long	1	XW	9A474	A
XA/B, ZF/G	All	3 port – 1-5/8" long	1	XY	9A474	D
XA/B, ZF/G	All	3 port – 2¼" long	1	XW	9A474	E
XA/B, ZF/G	All	4 port – 2¼" long	1	XY	9A474	F
XA/B	54H, 65H	GTHO – 2 port – 2¼" long	1	XY	9A474	JA
XA/B, ZF/G	All	Cap – ¼ tube – to blank trans. tube	1	V 387925 S		
XA/B, ZF/G	All	Cap – vacuum take-off – 3/16"	1	380614 S		

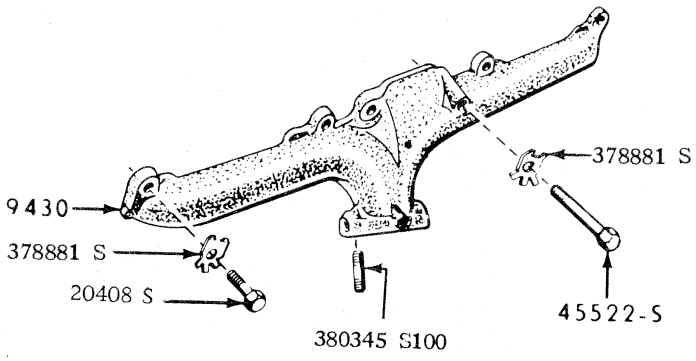

MANIFOLD AND RELATED PARTS 6 CYLINDER

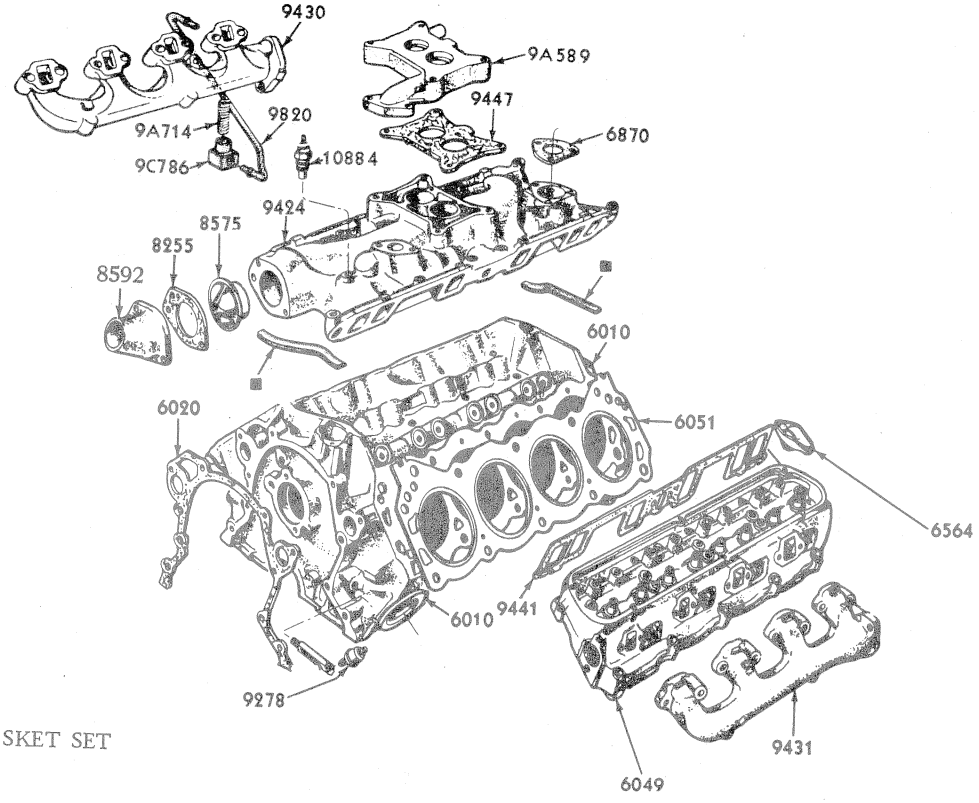

■ PART OF 9433 GASKET SET

MANIFOLD AND RELATED PARTS 8 CYLINDER

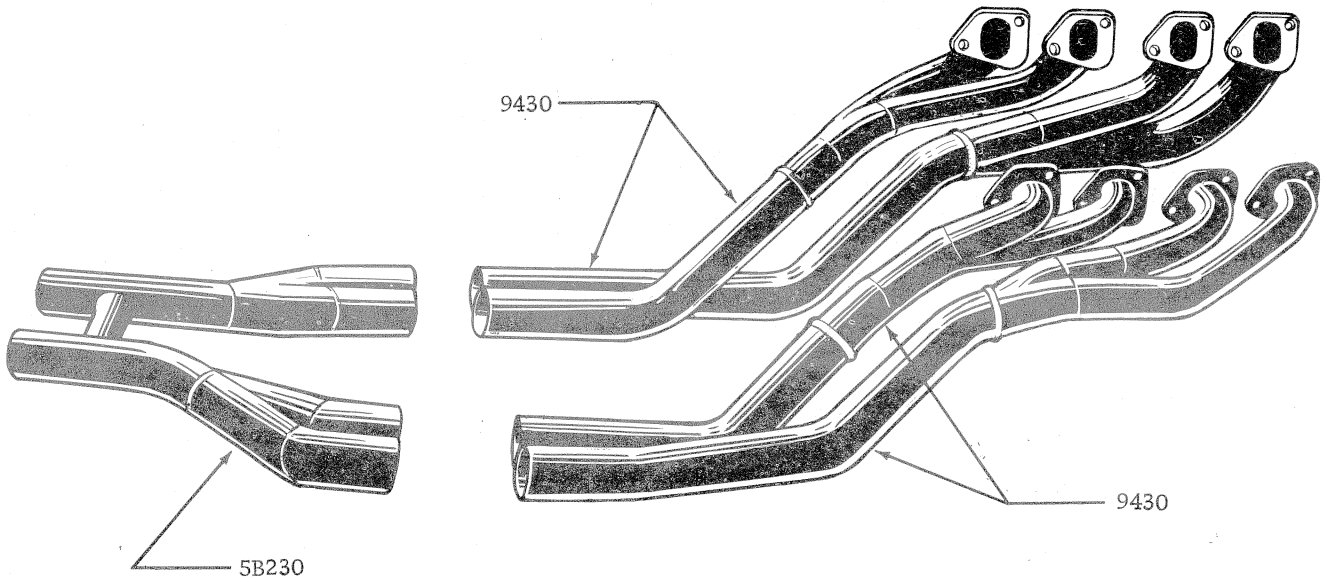

EXTRACTOR TYPE

MANIFOLD AND COLLECTOR PIPE

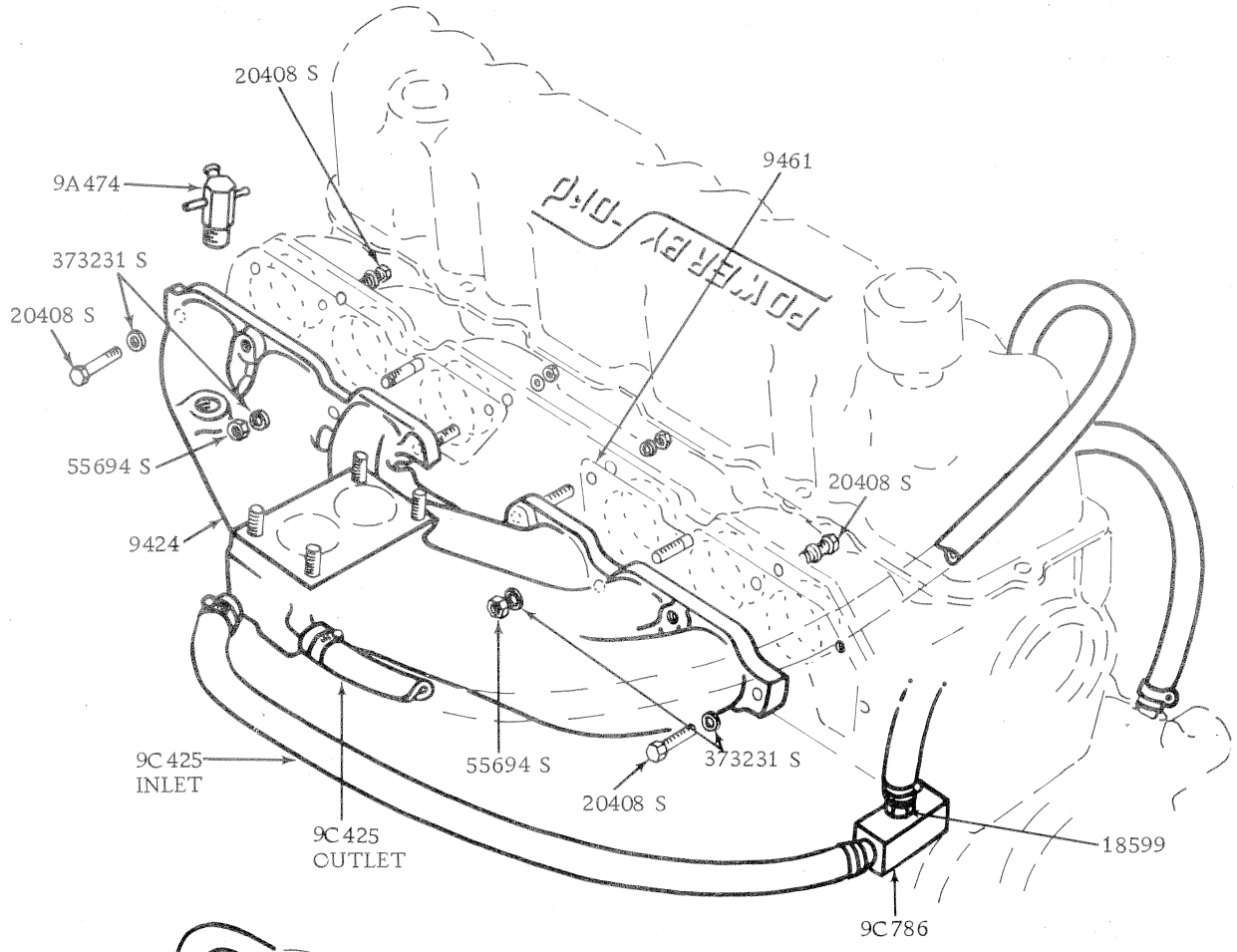

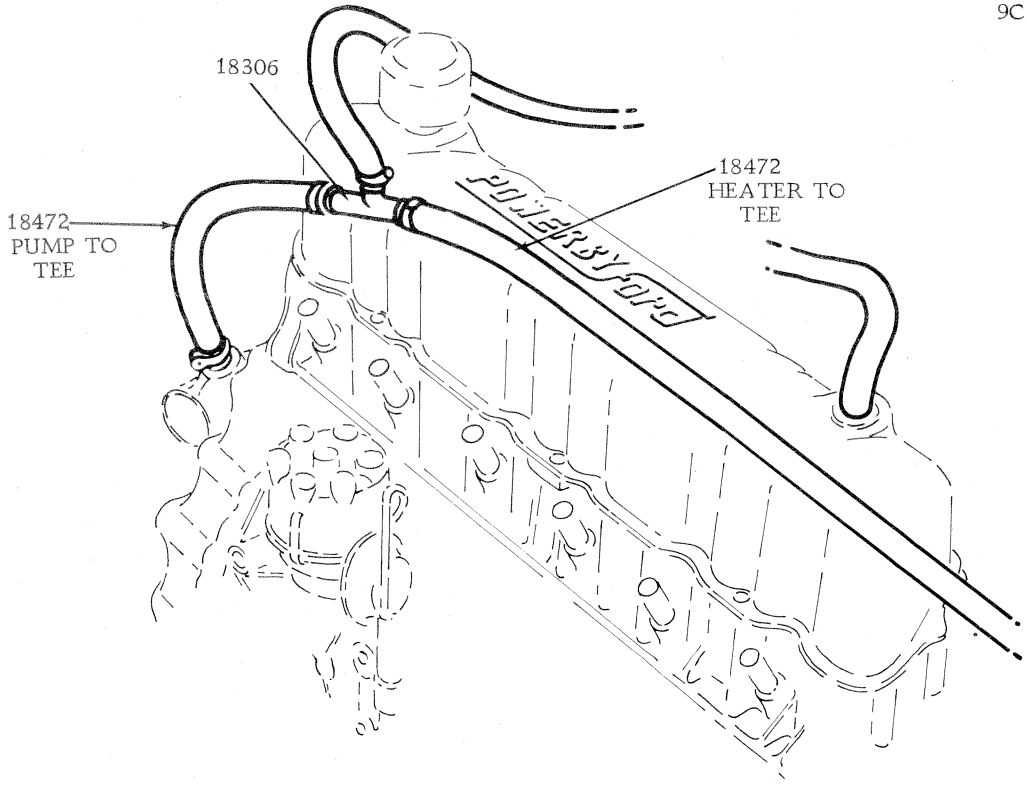

MANIFOLD HEATER HOSES 250 CID 2V

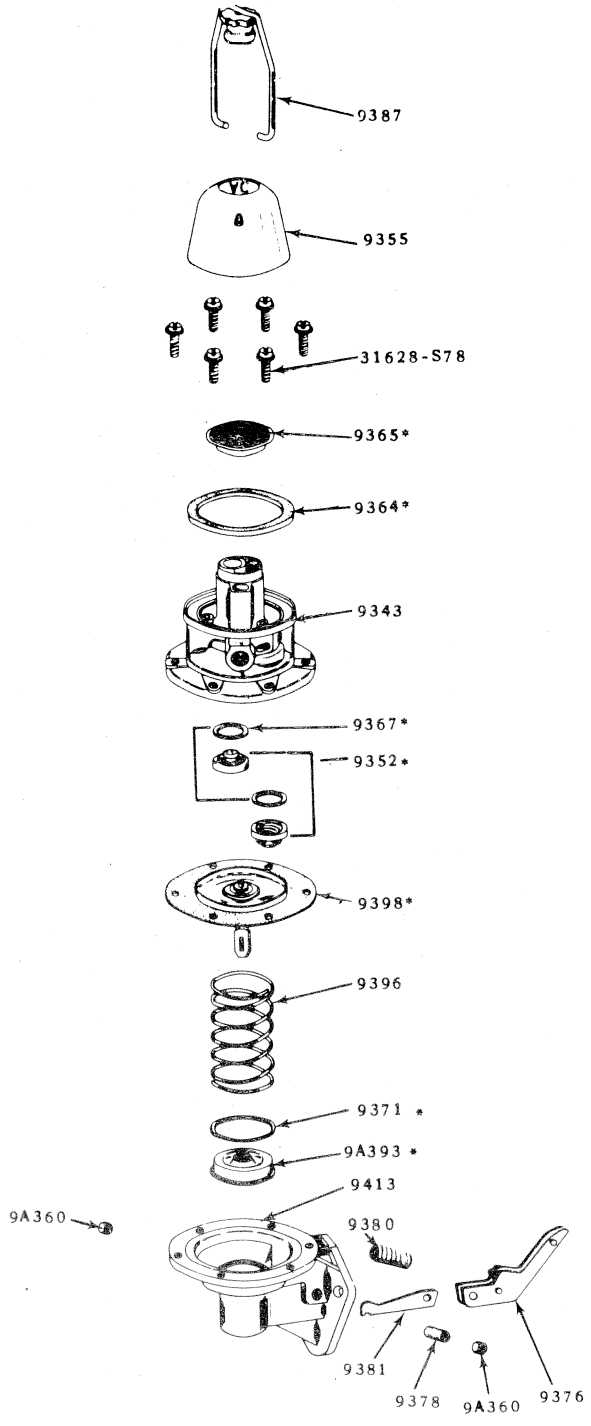

* Also included inrepair kit 9349

FUEL PUMP BENDIX TYPE

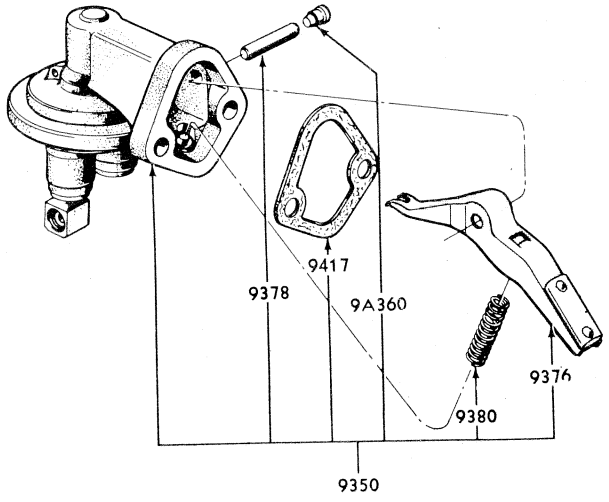

FUEL PUMP CARTER TYPE

HOW TO IDENTIFY CARBURETTOR PARTS

1. Locate the identification tag or plate on the carburettor main body. If the main body is replaced, transfer the tag to the new main body so that identification will not be lost.

2. Refer to the 'Carburettor Application Charts' to find the parts list for the model.

   Example: An XB Falcon 500 utility built before 12/74, with 351 c.i.d. 2V engine and automatic transmission, fitted with a Motorcraft carburettor identified 74DA/JA, uses parts list 'AO'

   Turn to the parts list and select the component part required. Gasket and repair kit numbers are shown at the beginning of the parts list.

CARBURETTOR APPLICATION CHART – 200/250/302 c.i.d.

MODEL/YEAR RANGE	BODY TYPE	ENGINE	TRANS-MISSION	IDENTIFICATION	PART NUMBER	REPLACED BY	PARTS LIST
XA – To 8/73	All	200 c.i.d.	Manual	2-3137-2-5	XA 9510 BA	XA 9510 M	B
XA – To 8/73	All	200 c.i.d.	Auto	2-3138-2-19	XA 9510 AA		A
XA/B – From 8/73 To 1/74	All	200 c.i.d.	Manual	2-3158	XA 9510 M	XB 9510 B	G
XA/B – From 8/73 To 1/74	All	200 c.i.d.	Auto	2-3157	XA 9510 L		F
XB – From 1/74 To 12/74	All	200 c.i.d.	Manual	2-3146	XB 9510 B		K
XB – From 1/74 To 12/74	All	200 c.i.d.	Auto	2-3145	XB 9510 A		J
XB – From 12/74	All	200 c.i.d.	Manual	75DA/BA	XB 9510 P		N
XB – From 12/74	All	200 c.i.d.	Auto	75DA/AA	XB 9510 N		O
XA, ZF – To 8/72	All	250 c.i.d. 1V	Manual	2-3139-2-9	XA 9510 DA	XA 9510 DC	D
XA, ZF – From 8/72 To 8/73	All	250 c.i.d. 1V	Manual	2-3153	XA 9510 DC		E
XA, ZF – To 8/73	All	250 c.i.d. 1V	Auto	2-3140	XA 9510 CA	XA 9510 N	C
XA/B, ZF/G – From 8/73 To 1/74	All	250 c.i.d. 1V	Manual	2-3160	XA 9510 P	XB 9510 D	I
XA/B, ZF/G – From 8/73 To 1/74	All	250 c.i.d. 1V	Auto	2-3159	XA 9510 N		H
XB, ZG – From 1/74 To 12/74	All	250 c.i.d. 1V	Manual	2-3148	XB 9510 D		L
XB, ZG – From 1/74 To 12/74	All	250 c.i.d. 1V	Auto	2-3147	XB 9510 CA		M
XB, ZG – From 12/74	All	250 c.i.d. 1V	Manual	75DA/DA	XB 9510 R		P
XB, ZG – From 12/74	All	250 c.i.d. 1V	Auto	75DA/CA	XB 9510 Q		Q
XA	All	250 c.i.d. 2V	All	2-3135-2-7	XA 9510 EA		R
XA/B, ZF/G – To 1/74	All	302 c.i.d.	All	2-3136-2-4	XA 9510 GA		S
XB, ZG – From 1/74 To 12/74	All	302 c.i.d.	Manual	831000	XB 9510 H		T
XB, ZG – From 1/74 To 12/74	All	302 c.i.d.	Auto	831001	XB 9510 G		U
XB, ZG – From 12/74	All	302 c.i.d.	Manual	75DA/KA	XB 9510 KA		V
XB, ZG – From 12/74	All	302 c.i.d.	Auto	75DA/JA	XB 9510 JA		W

CARBURETTOR APPLICATION CHART – 351 c.i.d.

MODEL/YEAR RANGE	BODY TYPE	ENGINE	TRANS-MISSION	IDENTIFICATION	PART NUMBER	REPLACED BY	PARTS LIST
XA,ZF – To 8/72	All	351 c.i.d. 2V	All	D2WF/CA	ARD2AE 9510 AA		AK
XA,ZF – From 8/72	All	351 c.i.d. 2V	Manual	72DA/KC	XA 9510 KA		AL
XA,ZF – From 8/72	All	351 c.i.d. 2V	Auto	72DA/JB	XA 9510 JA		AM
XB,ZG – To 12/74	All	351 c.i.d. 2V	Manual	74DA/KA	XB 9510 K		AN
XB,ZG – To 12/74	All	351 c.i.d. 2V	Auto	74DA/JA	XB 9510 J		AO
XB,ZG – From 12/74	All	351 c.i.d. 2V	Manual	75DA/MA	XB 9510 MA		AP
XB,ZG – From 12/74	All	351 c.i.d. 2V	Auto	75DA/LA	XB 9510 LA		AQ
XA – To 9/72	54H,65H	351 c.i.d. 4V	All	C9ZF/D	CA 790	CA 788 B	Y
XA – From 9/72 – To 4/73	54H,65H	351 c.i.d. 4V	Manual	C9ZF/D	CA 790	CA 788 B	Y
XA – From 9/72 – To 4/73	54H,65H	351 c.i.d. 4V	Auto	D2PF/SA	CA 788 A	CA 788 B	AA
XA – From 4/73	54H,65H	351 c.i.d. 4V	Manual	D3FF/KA	D3FF 9510 KA	D3FF 9510 LA	AB
XA – From 4/73	54H,65H	351 c.i.d. 4V	Auto	D3FF/LA	D3FF 9510 LA		AC
XA – From 4/73	54H,65H	351 c.i.d. 4V	Auto	D00F/AB	PL 9510 LA		AD
XB – To 1/74	54H,65H	351 c.i.d. 4V	Manual	74DA/MA	XB 9510 M		AE
XB – From 1/74	54H,65H	351 c.i.d. 4V	Manual	74DA/MB	XB 9510 MB		AG
XB – To 12/74	54H,65H	351 c.i.d. 4V	Auto	730A/AA	730A 9510 AA	D3FF 9510 LA ▲	AF
XB – From 12/74	54H,65H	351 c.i.d. 4V	Auto	D3FF/LA	D3FF 9510 LA		AC
XA/B – GTHO	54H,65H	351 c.i.d. 4V	Manual	D0ZF/Z	CA 782		Z

▲ WHEN REPLACING 730A 9510 AA
WITH D3FF 9510 LA ALSO ADD
PL 9583 A LEVER & 380098 S2 RIVET.

CARBURETTOR ASSEMBLIES – 200/250/302 c.i.d.

ENGINE	TRANSMISSION	CARBURETTOR TYPE	IDENTIFICATION	PART NUMBER	REPLACED BY	PARTS LIST
200 c.i.d.	Auto	Bendix–1V–M/C	2-3138-2-19	XA 9510 AA		A
200 c.i.d.	Manual	Bendix–1V–M/C	2-3137-2-5	XA 9510 BA	XA 9510 M	B
250 c.i.d. 1V	Auto	Bendix–1V–M/C	2-3140	XA 9510 CA	XA 9510 N	C
250 c.i.d. 1V	Manual	Bendix–1V–M/C	2-3139	XA 9510 DA	XA 9510 DC	D
250 c.i.d. 1V	Manual	Bendix–1V–M/C	2-3153	XA 9510 DC		E
200 c.i.d.	Auto	Bendix–1V–M/C	2-3157	XA 9510 L		F
200 c.i.d.	Manual	Bendix–1V–M/C	2-3158	XA 9510 M	XB 9510 B	G
250 c.i.d. 1V	Auto	Bendix–1V–M/C	2-3159	XA 9510 N		H
250 c.i.d. 1V	Manual	Bendix–1V–M/C	2-3160	XA 9510 P	XB 9510 D	I
200 c.i.d.	Auto	Bendix–1V–M/C	2-3145	XB 9510 A		J
200 c.i.d.	Manual	Bendix–1V–M/C	2-3146	XB 9510 B		K
250 c.i.d. 1V	Manual	Bendix–1V–M/C	2-3148	XB 9510 D		L
250 c.i.d. 1V	Auto	Bendix–1V–M/C	2-3147	XB 9510 CA		M
200 c.i.d.	Manual	Bendix–1V–M/C	75DA/BA	XB 9510 P		N
200 c.i.d.	Auto	Bendix–1V–M/C	75DA/AA	XB 9510 N		O
250 c.i.d. 1V	Manual	Bendix–1V–M/C	75DA/DA	XB 9510 R		P
250 c.i.d. 1V	Auto	Bendix–1V–M/C	75DA/CA	XB 9510 Q		Q
250 c.i.d. 2V	All	Bendix–2V–A/C	2-3135-2-7	XA 9510 EA		R
302 c.i.d.	All	Bendix–2V–A/C	2-3136-2-4	XA 9510 GA		S
302 c.i.d.	Manual	Email–2V–A/C	831000	XB 9510 H		T
302 c.i.d.	Auto	Email–2V–A/C	831001	XB 9510 G		U
302 c.i.d.	Manual	Email–2V–A/C	75DA/KA	XB 9510 KA		V
302 c.i.d.	Auto	Email–2V–A/C	75DA/JA	XB 9510 JA		W

CARBURETTOR ASSEMBLIES – 351 c.i.d.

ENGINE	TRANSMISSION	CARUBRETTOR TYPE	IDENTIFICATION	PART NUMBER	REPLACED BY	PARTS LIST
351 c.i.d. 4V	Manual	Motorcraft–4V–A/C	C9ZF/D	CA 790	CA 788 B	Y
351 c.i.d. 4V	Manual	Holley–4V–M/C	D0ZF/Z	CA 782		Z
351 c.i.d. 4V	Auto	Motorcraft–4V–A/C	D2PF/SA	CA 788 A	CA 788 B	AA
351 c.i.d. 4V	Manual	Motorcraft–4V–A/C	D3FF/KA	D3FF 9510 KA	D3FF 9510 LA	AB
351 c.i.d. 4V	Auto	Motorcraft–4V–A/C	D3FF/LA	D3FF 9510 LA		AC
351 c.i.d. 4V	Auto	Motorcraft–4V–A/C	D00F/AB	PL 9510 LA		AD
351 c.i.d. 4V	Manual	Motorcraft–4V–A/C	74DA/MA	XB 9510 M		AE
351 c.i.d. 4V	Auto	Motorcraft–4V–A/C	730A/AA	730A 9510 AA	D3FF 9510 LA ▲	AF
351 c.i.d. 4V	Manual	Motorcraft–4V–A/C	74DA/MB	XB 9510 MB		AG
351 c.i.d. 4V	Auto	Motorcraft–4V–A/C	D3PF/NA	CA 788 B		AH
351 c.i.d. 2V	All	Motorcraft–2V–A/C	D2WF/CA	ARD2AE 9510 AA		AK
351 c.i.d. 2V	Manual	Motorcraft–2V–A/C	72DA/KC	XA 9510 KA		AL
351 c.i.d. 2V	Auto	Motorcraft–2V–A/C	72DA/JB	XA 9510 JA		AM
351 c.i.d. 2V	Manual	Motorcraft–2V–A/C	74DA/KA	XB 9510 K		AN
351 c.i.d. 2V	Auto	Motorcraft–2V–A/C	74DA/JA	XB 9510 J		AO
351 c.i.d. 2V	Manual	Email–2V–A/C	75DA/MA	XB 9510 MA		AP
351 c.i.d. 2V	Auto	Email–2V–A/C	75DA/LA	XB 9510 LA		AQ

▲ WHEN REPLACING 730A-9510-AA
WITH D3FF-9510-LA, ALSO ADD
PL-9583-A LEVER & 380098-S2 RIVET.

DESCRIPTION	PART NUMBER	CARBURETTOR PARTS LIST "A TO L"											
		A	B	C	D	E	F	G	H	I	J	K	L
GASKET SET	**9502**												
	XT 9502 A	A	B	C	D	E	F	G	H	I			
	XB 9502 A										J	K	L
KIT – MINOR REPAIR	**9A586**												
	XA 9A586 C	A	B	C			F	G	H	I			
	XA 9A586 D				D								
	XA 9A586 E					E							
	XB 9A586 A										J		
	XB 9A586 B											K	L
KIT – MAJOR REPAIR	**9590**												
	XA 9590 C	A	B				F	G	H	I			
	XA 9590 E			C									
	XA 9590 D				D								
	XA 9590 F					E							
	XB 9590 A										J		
	XB 9590 B											K	
	XB 9590 D												L
Stud – 5/16" – 18 – 24 x 1.12" – carburettor retaining	375719 S8	2	2	2	2	2	2	2	2	2	2	2	2
Nut – 5/16" – 24 – carburettor retaining	351089 S8	2	2	2	2	2	2	2	2	2	2	2	2
LIMITER IDLE ADJUSTING NEEDLE	**9J500**												
	XA 9J500 A	A	B	C	D	E	F	G	H	I			
O.N.R.	XB 9J500 A										J	K	L
BODY ASSY. – MAIN	**9512**												
	XW 9512 C	A	B				F	G	H	I			
	XW 9512 B			C	D								
	XA 9512 A					E							
	XB 9512 A										J	K	
	XB 9512 B												L
PLUG – LEAD BALL	**9A512**												
	XT 9A512 A	a/r	a/r	a/r	a/r	a/r	a/r	a/r	a/r	a/r	a/r	a/r	a/r
GASKET – THROTTLE BODY TO MAIN BODY	**9516**												
	XT 9516 A	A	B	C	D	E	F	G	H	I			
	XB 9516 A										J	K	L
VALVE – ACCEL. PUMP DISCHARGE NEEDLE	**9A516**												
	ARC6DZ 9A516 A	A	B	C	D	E	F	G	H	I			
JET – POWER BY PASS	**9A516**												
	XB 9A516 A										J	K	L
PLUG – DRIVE	**9517**												
	ARC6DZ 9517 A	A	B	C	D	E	F	G	H	I	J	K	L
BRACKET – FLOAT SHAFT	**9A517**												
	XB 9A517 A										J	K	L
BODY ASSY. – THROTTLE	**9518**												
	XY 9518 A	A	B				F	G					
	XY 9518 B			C	D				H	I			
O.R.B. – (1) XA-9518-C – (1) XY-9531-A	XA 9518 B					E							
	XB 9518 A										J	K	L
GASKET – AIR HORN (ALSO REFER 9561)	**9519**												
	ARC6DZ 9519 A	A	B	C	D	E	F	G	H	I			
HORN ASSY. – AIR	**9524**												
	XY 9524 A	A	B	C	D	E	F	G	H	I	J	K	L
Screw – air horn attaching	112926 ES	4	4	4	4	4	4	4	4	4	4	4	4
Bar – air horn reinforcing – not serviced	AR 387389 S	A	B	C	D	E	F	G	H	I	J	K	L
Screw – reinforcing bar	112926 ES	2	2	2	2	2	2	2	2	2	2	2	2

DESCRIPTION	PART NUMBER	CARBURETTOR PARTS LIST "A TO L"											
		A	B	C	D	E	F	G	H	I	J	K	L
ROD – PUMP CONNECTOR	9531												
	XY 9531 B	A	B	C	D		F		H				
	XY 9531 A					E		G			J	K	
Use with XA-9518-B	ARC6DZ 9531 B					E							
O.N.R.	XA 9531 A									I			
	XB 9531 A												L
Pin – cotter	AR 387584 S	A	B	C	D	E	F	G	H	I	J	K	L
JET – MAIN METERING	9533												
Std.	XT 9533 J	A	B				F	G					
4000' – 8000'	XY 9533 A	A	B				F	G					
8000' – 10,000'	XY 9533 B	A	B				F	G					
Std.	XW 9533 F			C	D	E			H	I			
4,000' – 8,000'	XY 9533 C			C	D	E			H	I			
8,000' – 10,000'	XY 9533 D			C	D	E			H	I			
	XB 9533 A										J	K	
	XB 9533 B												L
LEVER ASSY. – FAST IDLE ADJ.	9538												
THROTTLE DRIVE	XY 9538 A	A	B	C	D	E	F	G	H	I			
	XB 9538 A										J	K	L
Nut – throttle lever	33796 S36	A	B	C	D	E	F	G	H	I	J	K	L
Washer – lock	34805 S78	A	B	C	D	E	F	G	H	I	J	K	L
Screw – idle adjusting	AR 387382						F	G	H	I			
SPRING – THROTTLE RETURN	9A538												
Throttle control	XT 9A538 A	A	B	C	D	E	F	G	H	I	J	K	L
SCREW – IDLE ADJUST	9B538												
	XB 9B538 A										J	K	L
SPRING – CHOKE LEVER	9539												
	XY 9539 A	A	B	C	D	E	F	G	H	I	J	K	L
NEEDLE – IDLE ADJUST	9541												
	XA 9541 B	A	B	C	D	E	F	G	H	I			
	XB 9541 A										J	K	L
IDLE TUBE	9542												
	XW 9542 B	A	B				F	G		I			
	XW 9542 A			C	D	E			H				
	XB 9542 A										J	K	L
PISTON ASSY. – PUMP	9B544												
	XW 9B544 A	A	B	C									
	ARC6DZ 9B544 A				D								
	XA 9B544 A					E				I		K	L
	XA 9B544 B						F	G	H				
	XB 9B544 A										J		
PLATE – CHOKE	9545												
	XY 9545 A	A	B	C	D	E	F	G	H	I	J	K	
	XW 9545 A												L
VALVE – IDLE VENT	9A545												
	XY 9A545 A	A	B	C	D	E	F	G	H	I			
Spring – vent valve	AR 387391 S	A	B	C	D	E	F	G	H	I			
STEM – VENT VALVE	9B545												
	XY 9B545 A	A	B	C	D	E	F	G	H	I	J	K	L
SHAFT ASSY. – CHOKE	9546												
	ARC6DZ 9546 A	A	B	C	D	E	F	G	H	I	J	K	L
LINK – CHOKE	9548												
	XY 9548 A	A	B	C	D	E	F	G	H	I	J	K	L
CLIP – CHOKE LINK	9A548												
	ARC6DZ 9A548 A	A	B	C	D	E	F	G	H	I	J	K	L

DESCRIPTION	PART NUMBER	CARBURETTOR PARTS LIST "A TO L"											
		A	B	C	D	E	F	G	H	I	J	K	L
DASHPOT ASSY.	9B549												
	CJ 9B549 AA						F		H		J		
FLOAT ASSY.	9550												
	ARC6DZ 9550 A	A	B	C	D	E	F	G	H	I	J	K	L
BAFFLE – FLOAT CHAMBER	9A550												
	ARC6DZ 9A550 A	A	A	B	C	D	E	F	G	H	I		
SHAFT – FLOAT LEVER	9558												
	ARC6DZ 9558 A	A	B	C	D	E	F	G	H	I	J	K	L
SPRING – BOWL VENT ROD (ALSO REFER 9636)	9560												
	XA 9560 A					E					J	K	L
GASKET – FLOAT BOWL (ALSO REFER 9519)	9561												
	XB 9561 A										J	K	L
PLUG	9562												
Main jet	ARC6DZ 9562 A	A	B	C	D	E	F	G	H	I	J	K	L
Pump check valve	ARC6DZ 9562 B	A	B	C	D	E	F	G	H	I	J	K	L
GASKET – MAIN JET PLUG	9563												
Main jet	ARC6DZ 9563 A	A	B	C	D	E	F	G	H	I	J	K	L
Check valve plug	ARC6DZ 9563 B	A	B	C	D	E	F	G	H	I	J	K	L
VALVE & SEAT ASSY.	9564												
	ARC6DZ 9564 B	A	B	C	D	E	F	G	H	I	J	K	L
GASKET – FUEL INLET SEAT	9569												
	ARC6DZ 9569 A	A	B	C	D	E	F	G	H	I	J	K	L
SPRING – THROTTLE RETURN (REFER 9737)	9B569												
BUSHING – SPRING RETAINING	9F569												
	ARC6DZ 9F569 A	A	B	C	D	E	F	G	H	I	J	K	L
VALVE ASSY. – PUMP CHECK	9573												
	ARC6DZ 9573 A	A	B	C	D	E	F	G	H	I	J	K	L
SCREEN – PUMP STRAINER	9575												
	ARC6DZ 9575 A	A	B	C	D	E	F	G	H	I	J	K	L
CLIP – STRAINER SCREEN	9A575												
	ARC6DZ 9A575 A	A	B	C	D	E	F	G	H	I	J	K	L
SPRING – NEEDLE IDLE ADJUST	9578												
	XA 9578 A	2	2	2	2	2	2	2	2	2			
SHAFT ASSY. – THROTTLE	9581												
	ARC6DZ 9581 A	A	B				F	G	H	I			
	XY 9581 A			C	D								
	XA 9581 A					E							
	XB 9581 A										J	K	L
LEVER-PUMP FLOATING	9A581												
	ARC6DZ 9A581 A	A	B	C	D	E							
	XB 9A581 A						F	G	H	I	J	K	L
LEVER	9583												
Choke	ARC6DZ 9583 A	A	B	C	D	E	F	G	H	I	J	K	L

DESCRIPTION	PART NUMBER	CARBURETTOR PARTS LIST "A TO L"											
		A	B	C	D	E	F	G	H	I	J	K	L
PLATE – THROTTLE	9585												
	XA 9585 A	A	B				F	G					
	XW 9585 E			C	D	E			H	I			
	XB 9585 A										J	K	L
SCREW	9586												
Throttle plate	40 9586	2	2	2	2	2	2	2	2	2	2	2	2
Choke plate	ARC6DZ 9586 A	2	2	2	2	2	2	2	2	2	2	2	2
CAP – CARBURETTOR DASHPOT	9B588												
	CJ 9B588 A						F		H		J		
SPRING – SLOW RETURN ADJUST. SCREW	9589												
	ARC6DZ 9589 A	A	B	C	D	E	F	G	H	I	J	K	L
Screw	AR 387382 S	A	B	C	D	E							
Pin – cotter	AR 387584 S	A	B	C	D	E							
JET – POWER BY PASS	9594												
	XW 9594 B	A	B				F	G		I			
	XY 9594 A			C	D	E			H				
	XW 9594 A										J	K	L
BRACKET – CHOKE CONTROL	9595/7												
	XY 9597 A	A	B	C	D	E	F	G	H	I	J		L
	XB 9597 A											K	
Screw assy. – bracket attaching	AR 387386 S	2	2	2	2	2	2	2	2	2	2	2	2
Screw – wire clamp – O.N.R.	AR 387385 S						F	G	H	I	J	K	L
SPRING – FLOAT HINGE PIN	9599												
	ARC6DZ 9599 A	A	B	C	D	E	F	G	H	I	J	K	L
GASKET – POWER BY PASS JET	9608												
	ARC6DZ 9608 A	A	B	C	D	E	F	G	H	I	J	K	L
SPRING – PUMP PISTON	9636												
	XA 9560 A	A	B	C	D	E	F	G	H	I	J	K	L
CLAMP – CHOKE OUTER CABLE	9792												
	ARC6DZ 9792 A	A	B	C	D	E	F	G	H	I	J	K	L
Screw & washer – cable clamp	112926 ES	A	B	C	D	E	F	G	H	I	J	K	L
Screw – choke wire swivel – not serviced	AR 387385 S	A	B	C	D	E	F	G	H	I	J	K	L
Screw & lockwasher – bracket retaining	AR 387386 S	2	2	2	2	2	2	2	2	2	2	2	2
PISTON ASSY. – VACUUM POWER	9904												
	ARC6DZ 9904 A	A	B	C	D	E	F	G	H	I	J	K	L

DESCRIPTION	PART NUMBER	CARBURETTOR PARTS LIST "M TO X"											
		M	N	O	P	Q	R	S	T	U	V	W	X
GASKET SET	**9502**												
	XB 9502 A	M											
	XB 9502 C*		N	O	P	Q							
	XY 9502 A						R						
	XW9502 A							S					
	XB 9502 B								T	U	V	W	
KIT – MINOR REPAIR	**9A586**												
	XB 9A586 A	M											
	XB 9A586 D*		N		P								
	XB 9A586 C*			O		Q							
	XA 9A586 B						R						
	XA 9A586 A							S					
KIT – MAJOR REPAIR	**9590**												
	XB 9590 C	M											
	XB 9590 F*		N		P								
	XB 9590 E*			O		Q							
	XA 9590 B						R						
	XA 9590 A							S					
Stud – 5/16" – 18 – 24 x 1.12" – carburettor retaining	375719 S8	2	2	2	2	2							
Stud – 5/16" – 18 – 24 x 1.4" – carburettor retaining	V 387883 S8						4	4	4	4	4	4	
Nut – 5/16" – 24 – carburettor retaining	351089 S8	2	2	2	2	2	4	4	4	4	4	4	
Cap – 3/16" – vacuum take off	380614 S							S	T	U	V	W	
LIMITER IDLE ADJUSTING NEEDLE O.N.R.	**9J500**												
	XB 9J500 A	M	N	O	P	Q							
	XA 9J500 A						2	2					
	XB 9J500 B								2	2	2	2	
BODY ASSY. – MAIN	**9512**												
	XB 9512 B	M											
	XB 9512 E		N	O	P	Q							
	XW 9512 A						R	S					
	XB 9512 C								T	U			
	XB 9512 G*										V	W	
PLUG – LEAD BALL	**9A512**												
	XT 9A512 A	a/r	a/r	a/r	a/r	a/r							
GASKET – THROTTLE BODY TO MAIN BODY	**9516**												
	XB 9516 A	M	N	O	P	Q							
	XW 9516 A						R	S					
	XB 9516 B								T	U	V	W	
JET – POWER BY PASS	**9A516**												
	XB 9A516 A	M											
	XB 9A516 B		N	O	P	Q							
	XY 9A516 A						R						
	XW 9A516 B							S					
PLUG – DRIVE	**9517**												
	ARC6DZ 9517 A	M	N	O	P	Q							
	XW 9517 A						2	2					
BRACKET – FLOAT SHAFT	**9A517**												
	XB 9A517 A	M	N	O	P	Q							
	XB 9A517 B								T	U			
GASKET – POWER BY PASS JET	**9B517**												
	XW 9B517 A						R	S					

DESCRIPTION	PART NUMBER	CARBURETTOR PARTS LIST "M TO X"											
		M	N	O	P	Q	R	S	T	U	V	W	X
BODY ASSY. – THROTTLE	**9518**												
	XB 9518 A	M											
	XB 9518 C		N	O	P	Q							
	XY 9518 C						R						
	XA 9518 A							S					
For man. transmission tie or remove kickdown lever													
	XB 9518 B								T	U		W	
	XB 9518 F										V		
Screw & washer	V 387905						2	2					
Screw & washer	V 387906						2	2					
GASKET – AIR HORN	**9519**												
	XW 9519 A						R	S					
SUPPORT ASSY. – BOOSTER VENTURI	**9A523**												
	XB 9A523 B								T		V		
	XB 9A523 A									U			
	XB 9A523 D*											W	
COVER ASSY. – VENTURI	**9B523**												
	XB 9B523 A								T	U	V	W	
HORN ASSY. – AIR	**9524**												
	XY 9524 A	M											
	XB 9524 C*		N	O	P	Q							
	XW 9524 A						R	S					
	XB 9524 A								T	U			
	XB 9524 D*										V	W	
Screw – air horn attaching	112926 ES	4	4	4	4	4							
Bar – air horn reinforcing – not serviced	AR 387389 S	M	N	O	P	Q							
Screw – reinforcing bar	112926 ES	2	2	2	2	2							
SCREW – AIR HORN RETAINING	**9525**												
	XB 9525 A								2	2	2	2	
SPRING – POWER VALVE	**9E525**												
	XB 9E525 A								T	U			
	XB 9E525 C*										V	W	
ROD – CARBURETTOR METERING	**9A526**												
	XB 9A526 A								2	2			
	XB 9A526 C*										2	2	
LINK – ACCELERATOR PUMP	**9529**												
	XB 9529 A								T	U			
	XB 9529 B*										V	W	
ROD – FAST IDLE	**9B530**												
	XW 9B530 A						R	S					
ROD – FAST IDLE CAM	**9D530**												
	XB 9D530 A								T	U	V	W	
ROD – PUMP CONNECTOR	**9531**												
	XY 9531 A	M		O		Q							
	XB 9531 A		N		P								
Pin – cotter	AR 387584 S	M	N	O	P	Q							

DESCRIPTION	PART NUMBER	CARBURETTOR PARTS LIST "M TO X"											
		M	N	O	P	Q	R	S	T	U	V	W	X
JET – MAIN METERING	**9533**												
	XB 9533 B	M											
	XB 9533 A		N	O	P	Q							
Main discharge	XW 9533 A						2	2					
Main metering – std.	XW 9533 B						2						
Main metering – 4,000' – 8,000'	XW 9533 C						2						
Main metering – 8,000' – 10,000'	XW 9533 D						2						
Main metering – std.	XW 9533 G							2					
Main metering – 4,000' – 8,000'	XW 9533 H							2					
Main metering – 8,000' – 10,000'	XW 9533 J							2					
	XB 9533 C								2	2	2	2	
GASKET – BOOSTER VENTURI SUPPORT	**9A536**												
Lower	XB 9A536 A								T	U	V	W	
Upper	XB 9A536 B								T	U	V	W	
LEVER ASSY. – FAST IDLE ADJ. THROTTLE DRIVE	**9538**												
	XB 9538 A	M	N	O	P	Q							
Nut – throttle lever	33796 S36	M	N	O	P	Q							
Washer – lock	34805 S78	M	N	O	P	Q							
PUMP – LEVER	**9538**												
	XW 9538 B						R	S					
Screw	V 387898						R	S					
SPRING – THROTTLE RETURN	**9A538**												
Throttle control	XT 9A538 A	M	N	O	P	Q							
	XB 9A538 A								T	U	V	W	
SCREW – IDLE ADJUST.	**9B538**												
	XB 9B538 A	M	N	O	P	Q							
Slow idle – short	XB 9B538 B								T	U			
Slow idle – short	XB 9B538 D*										V	W	
Fast idle – long	XB 9B538 C								T	U	V	W	
NOZZLE – PUMP	**9B538**												
	XY 9B538 A						R	S					
Screw	V 387899						R	S					
Ball – pump outlet check	V 387900						R	S					
Ball – pump inlet check	V 387910						R	S					
SPRING – CHOKE LEVER	**9539**												
	XY 9539 A	M											
	XB 9539 A*		N		P								
	XB 9539 B*			O		Q							
GASKET – PUMP NOZZLE	**9B539**												
	XW 9B539 A						R	S					
NEEDLE – IDLE ADJUST.	**9541**												
	XB 9541 A	M	N	O	P	Q							
	XA 9541 A						2	2					
	XB 9541 B								2	2			
	XB 9541 C*										2	2	
SCREW – IDLE	**9A541**												
Slow idle	XW 9A541 A						R	S					
Fast idle	XW 9A541 B						R	S					
IDLE TUBE	**9542**												
	XB 9542 A	M											
	XB 9542 B		N	O	P	Q							
	XW 9542 E						2	2					
Bleeder – high speed	V 387901						2	2					

DESCRIPTION	PART NUMBER	CARBURETTOR PARTS LIST "M TO X"											
		M	N	O	P	Q	R	S	T	U	V	W	X
ROD – ACCEL. PUMP LINK TO THROTTLE LEVER													
	9B542												
	XY 9B542 A						R	S					
	XB 9B542 A								T	U	V	W	
PISTON ASSY. – PUMP	**9B544**												
	XB 9B544 A	M											
	XB 9B544 D*		N		P								
	XB 9B544 C*			O		Q							
	XY 9B544 A						R	S					
	XB 9B544 B								T	U			
	XB 9B544 E*										V		
	XB 9B544 F											W	
Washer – spring clip	V 387912						R	S					
PLATE – CHOKE	**9545**												
	XW 9545 A	M					R	S					
	XY 9545 A		N	O	P	Q							
	XB 9545 A								T	U			
STEM – VENT VALVE	**9B545**												
	XY 9B545 A	M											
SHAFT ASSY. – CHOKE	**9546**												
	ARC6DZ 9546 A	M	N	O	P	Q							
	XW 9546 A						R	S					
	XB 9546 A								T	U	V	W	
WASHER – BOWL VENT	**9B546**												
	XB 9B546 A								T	U			
LINK – CHOKE	**9548**												
	XY 9548 A	M	N	O	P	Q							
CLIP – CHOKE LINK	**9A548**												
	ARC6DZ 9A548 A	M	N	O	P	Q	R	S					
CLIP – ROD RETAINING	**9B548**												
Accelerator pump rod	XB 9B548 A								2	2			
SPRING – PUMP	**9B548**												
Bottom	XW 9B548 A						R	S					
Duration	XY 9B548 A						R	S					
Washer – duration spring retainer – O.N.R.	V 387911						R	S					
Washer – spring clip	V 387912						R	S					
DASHPOT ASSY.	**9B549**												
	CJ 9B549 AA	M											
DIAPHRAGM ASSY. – CHOKE KICK	**9B549**												
	XW 9B549 A						R	S					
FLOAT ASSY.	**9550**												
	ARC6DZ 9550 A	M	N	O	P	Q							
	XW 9550 A						R	S					
	XB 9550 A								T	U	V	W	
BAFFLE – FLOAT CHAMBER	**9B550**												
	XW 9B550 A						R	S					
LEVER – CHOKE SHAFT	**9551**												
	XB 9551 A								T	U	V	W	
VALVE ASSY. – POWER	**9G551**												
	XB 9G551 A								T	U			
	XB 9G551 B*										V	W	

DESCRIPTION	PART NUMBER	CARBURETTOR PARTS LIST "M TO X"											
		M	N	O	P	Q	R	S	T	U	V	W	X
SCREW – POWER VALVE RETAINING	9G552												
	XB 9G552 A								T	U			
PLATE – AIR DISTRIBUTION	9F553												
O.N.R.	XY 9F553 A						2						
SHAFT – FLOAT LEVER	9558												
	ARC6DZ 9558 A	M	N	O	P	Q	R	S					
	XB 9558 A								T	U	V	W	
SCREW – FAST IDLE CAM	9D558												
	XB 9D558 A								T	U	V	W	
SPRING – BOWL VENT ROD (ALSO REFER 9636)	9560												
	XA 9560 A	M											
GASKET – FLOAT BOWL (ALSO REFER 9519)	9561												
	XB 9561 A	M											
	XB 9561 AA		N	O	P	Q							
	XB 9561 B								T	U	V	W	
PLUG	9562												
Main jet	ARC6DZ 9562 A	M	N	O	P	Q	2	2					
Pump check valve	ARC6DZ 9562 B	M	N	O	P	Q							
GASKET – MAIN JET PLUG	9563												
Main jet	ARC6DZ 9563 A	M	N	O	P	Q	2	2					
Check valve plug	ARC6DZ 9563 B	M	N	O	P	Q							
VALVE & SEAT ASSY.	9564												
	ARC6DZ 9564 B	M	N	O	P	Q							
	XW 9564 A						R	S					
	XB 9564 A								T	U	V	W	
GASKET – FUEL INLET SEAT	9569												
	ARC6DZ 9569 A	M	N	O	P	Q	R	S					
	XB 9569 A								T	U	V	W	
SPRING – THROTTLE RETURN (REFER 9737)	9B569												
BUSHING – SPRING RETAINING	9F569												
	ARC6DZ 9F569 A	M	N	O	P	Q							
	XB 9F569 A								2	2	2	2	
VALVE ASSY. – PUMP CHECK	9573												
	ARC6DZ 9573 A	M	N	O	P	Q							
SCREEN – PUMP STRAINER	9575												
	ARC6DZ 9575 A	M	N	O	P	Q							
CLIP – STRAINER SCREEN	9A575												
	ARC6DZ 9A575 A	M	N	O	P	Q							
VALVE – ACCELERATOR PUMP CHECK	9576												
Ball – accelerator pump check	XB 9576 A								T	U			
Ball – power valve check	XB 9576 B								T	U			
SCREW – PUMP DISCHARGE NOZZLE	9577												
	XB 9577 A								2	2			
	XB 9577 B*										2	2	
SPRING – NEEDLE IDLE ADJUST.	9578												
	XA 9578 A						2	2					
	XB 9578 A								2	2	2	2	

DESCRIPTION	PART NUMBER	CARBURETTOR PARTS LIST "M TO X"											
		M	N	O	P	Q	R	S	T	U	V	W	X
SHAFT ASSY. – THROTTLE	**9581**												
	XB 9581 A	M	N	O	P	Q							
	XW 9581 A						R	S					
	XB 9581 B								T	U			
	XB 9581 E*										V		
	XB 9581 B											W	
Washer – O.N.R.	V 387903						R	S					
Nut	V 387902						R	S					
Screw	V 387904						4	4					
LEVER – PUMP FLOATING	**9A581**												
	XB 9A581 A	M	N	O	P	Q							
LEVER ASSY. – THROTTLE	**9A581**												
	XW 9A581 A						R	S					
Lockwasher – O.N.R.	V 387903						R	S					
Nut	V 387902						R	S					
LEVER	**9583**												
Choke	ARC6DZ 9583 A	M	N	O	P	Q							
Choke	XW 9583 A						R	S					
Lockwasher – O.N.R.	V 387896						R	S					
Nut	V 387897						R	S					
PLATE – THROTTLE	**9585**												
	XB 9585 A	M	N	O	P	Q							
	XW 9585 A						2	2					
	XB 9585 B								2	2	2	2	
SCREW	**9586**												
Throttle plate	40 9586	2	2	2	2	2	2	2					
Choke plate	ARC6DZ 9586 A	2	2	2	2	2							
Throttle plate	XB 9586 A								4	4	4	4	
Choke plate	XB 9586 B								2	2	2	2	
GASKET – ECONOMIZER BODY	**9A588**												
	XB 9A588 A								T	U	V	W	
CAP – CARBURETTOR DASHPOT	**9B588**												
	CJ 9B588 AA	M											
SPRING – SLOW RETURN ADJUST. SCREW													
	9589												
	ARC6DZ 9589 A	M	N	O	P	Q							
	XW 9589 A						R	S					
	XB 9589 A								T	U			
JET – POWER BY PASS	**9594**												
	XW 9594 A	M	N	O	P	Q							
BRACKET – CHOKE CONTROL	**9595/7**												
	XY 9597 A	M											
	XB 9597 D*		N										
	XB 9597 C*			O	P	Q							
Screw assy. – bracket attaching	AR 387386 S	2	2	2	2	2							
Screw – wire clamp O.N.R.	AR 387385 S	M	N	O	P	Q							
CAM – FAST IDLE	**9597**												
	XB 9597 B								T	U			
	XB 9597 A										V	W	
LEVER – THERMOSTAT SHAFT	**9597**												
	XW 9597 A						R	S					
Lockwasher – O.N.R.	V 387907						R	S					
Nut – O.N.R.	AR 387393 S						R	S					

DESCRIPTION	PART NUMBER	CARBURETTOR PARTS LIST "M TO X"											
		M	N	O	P	Q	R	S	T	U	V	V	X
SPRING – FLOAT HINGE PIN	**9599**												
	ARC6DZ 9599 A	M	N	O	P	Q	R	S					
RETAINER – FLOAT LEVER SHAFT	**9599**												
	XB 9599 A								T	U	V	W	
RETAINER – ACCEL. PUMP SPRING	**9599**												
	XB 9599 B								T	U			
ROD – CHOKE KICK	**9A599**												
	XW 9A599 A						R	S					
	XB 9A599 A								T	U	V	W	
Retainer – choke kick rod	V 387895						R	S					
GASKET – POWER BY PASS JET	**9608**												
	ARC6DZ 9608 A	M	N	O	P	Q							
SCREW – ACCELERATOR PUMP ARM	**9C631**												
	XB 9C631 A								T	U	V	W	
SPRING – PUMP PISTON	**9636**												
	XA 9560 A	M											
	XB 9636 A								T	U			
SHAFT & LEVER – CHOKE HOUSING	**9A753**												
	XW 9A753 A						R	S					
LEVER – CHOKE THERMOSTAT	**9A754**												
	XB 9A754 A								T	U			
LEVER – TRANSMISSION KICK DOWN ROD	**9C772**												
	XB 9C772 A									U		W	
CLAMP – CHOKE OUTER CABLE	**9792**												
	ARC6DZ 9792 A	M	N	O	P	Q							
Screw & washer – cable clamp	112926 ES	M	N	O	P	Q							
Screw – choke wire swivel – not serviced	AR 387385 S	M	N	O	P	Q							
Screw & lockwasher – bracket retaining	AR 387386 S	2	2	2	2	2							
LINK – CHOKE THERMOSTAT	**9834**												
	XB 9834 A								T	U			
PISTON ASSY. – CHOKE	**9840**												
	XB 9840 A								T	U	V	W	
CLAMP – THERMOSTATIC CHOKE HOUSING	**9842**												
	XB 9842 A								3	3	3	3	
COVER ASSY. – THERMOSTAT	**9848**												
	XY 9848 B						R						
	XW 9848 A							S					
	XB 9848 A								T	U	V	W	
Washer	V 387908							3					
Screw	V 387909							3					
HOUSING & PLUG ASSY. – CHOKE	**9849**												
	XA 9849 A						R						
BUSHING – CHOKE HOUSING	**9851**												
	XB 9851 A								T	U	V	W	
GASKET – THERMOSTATIC CHOKE HOUSING	**9853**												
	XB 9853 A								T	U	V	W	

DESCRIPTION	PART NUMBER	CARBURETTOR PARTS LIST "M TO X"											
		M	N	O	P	Q	R	S	T	U	V	W	X
GASKET – THERMOSTATIC CHOKE HOUSING													
	9871												
	XW 9871 A						R	S					
	XB 9871 A								T	U	V	W	
PISTON ASSY. – VACUUM POWER													
	9904												
	ARC6DZ 9904 A	M	N	O	P	Q							
	XW 9904 A						R	S					

DESCRIPTION	PART NUMBER	CARBURETTOR PARTS LIST "Y TO AJ"											
		Y	Z	AA	AB	AC	AD	AE	AF	AG	AH	AI	AJ
GASKET SET	9502												
	CG 221 B	Y		AA	AB	AC	AD	AE	AF	AG	AH		
	CG 237 A		Z										
KIT - MINOR REPAIR	9A586												
	CT 226 B	Y		AA	AB	AC	AD	AE	AF		AH		
	CT 211 B		Z										
	CT 207 A									AG			
Stud – 5/16" – 18 – 24 x 1.50" – carburettor retaining	88391 S	4	4	4	4	4	4	4	4	4	4		
Nut – 5/16" – 24 – carburettor retaining	351089 S	4	4	4	4	4	4	4	4	4	4		
Cap – 3/16" – vacuum take-off	380614 S	Y	Z	AA	AB	AC	AD	AE	AF	AG	AH		
FILTER ASSY. – FUEL	9155												
	FG 19 B		Z										
	FG 14 A							AE	AF	AG	AH		
GASKET – FUEL INLET FITTING	9229												
	C6AZ 9229 A		3										
LIMITER IDLE ADJUSTING NEEDLE	9J500												
	CM 747	2			2	2	2	2	2	2	2		
	CM 942		2										
SEAL – FAST IDLE ROD O.N.R.	9B501												
	C1AE 9B501 A		Z										
DIAPHRAGM – SECONDARY THROTTLE	9503												
	CM 4		Z										
SPRING – SECONDARY THROTTLE RETURN	9B504												
	CM 656	Y		AA	AB	AC	AD	AE	AF	AG	AH		
ROD – SECONDARY THROTTLE CONTROL	9C504												
	C7AZ 9C504	Y		AA	AB	AC	AD	AE	AF	AG	AH		
	CM 872		Z										
Ring – 1/8" retaining	377918 S8B	2		2	2	2	2	2	2	2	2		
COVER – SECONDARY	9507												
	B7A 9507 B		Z										
Screw assy. – No. 8 – 32 x 5/8" cover to carby.	43255 S8		4										
BOWL & PLUGS – PRIMARY	9A507												
	CM 1139		Z										
BOWLS & PLUGS – SECONDARY	9A508												
	CM 1254		Z										
BUSHING – THROTTLE SHAFT Nylon	9B508												
	C7AZ 9B508 A	Y		AA	AB	AC	AD	AE	AF	AG	AH		
BODY & PLUGS – PRIMARY	9A511												
	CM 1252		Z										
Elbow – spark valve	381719 S		Z										
WEIGHT – PUMP DISCHARGE BALL	9B511												
Ball – 3/16" steel – accel. pump inlet passage	371350 S				AB	AC							
BODY ASSY. – MAIN	9512												
Screw – air horn to main body	381744 S						16			16			
BODY & PLUGS – SECONDARY	9A513												
	CM 1247		Z										

DESCRIPTION	PART NUMBER	CARBURETTOR PARTS LIST "Y TO AJ"											
		Y	Z	AA	AB	AC	AD	AE	AF	AG	AH	AI	AJ
LEVER & SWIVEL ASSY. – CHOKE	9A514												
O.N.R.	CM 869		Z										
Screw – lever retaining	31032 S8B		Z										
GASKET – THROTTLE BODY TO MAIN BODY	9516												
	C8SZ 9516 A	Y					AD						
	C3AZ 9516 A		Z										
	C7AZ 9516 A			AA									
O.N.R.	CG 375				AB	AC		AE	AF		AH		
	CG 395									AG			
VALVE – ACCEL. PUMP DISCHARGE NEEDLE	9A516												
	CM 676	Y		AA	AB	AC	AD	AE	AF	AG	AH		
	CM 22		Z										
BRACKET – FLOAT SHAFT	9A517												
O.N.R.	C6AZ 9A517 A		2										
Screw assy. – No. 6 – 32 x 0.50" – baffle & float to bowl – O.N.R.	43250 S		4										
GASKET THROTTLE BODY	9A518												
	CG 224		2										
FITTING – FUEL TRANSFER TUBE	9A520												
	C6AZ 9A520 B		2										
GASKET – FUEL VALVE SEAT	9A522												
Lock screw – O.N.R.	B9TE 9A522 A		2										
Adjusting nut	B9TE 9A522 B		2										
HORN ASSY. – AIR	9524												
Screw – air horn retaining	381744 S							16	16				
CAM – ACCEL. PUMP DIAPHRAGM OPERATING	9526												
	CM 143		Z										
Screw – pump cam – not serviced	33044 S		Z										
SPRING – FAST IDLE CAM	9C526												
O.N.R.	CM 1255	Y											
SEAL – AIR HORN	9C527												
	CM 1682	Y			AB	AC	AD	AE	AF	AG	AH		
COVER – ACCELERATOR PUMP	9528												
	CM 461		Z										
Screw – accel. pump cover	43248 S8		4										
LINK – ACCELERATOR PUMP	9529												
	CM 694	Y		AA	AB	AC	AD	AE	AF	AG	AH		
Pin – link retaining	383070 S						2			2	2		
SCREW – PUMP DISCHARGE NOZZLE	9B529												
O.N.R.	CM 875		Z										
COMPENSATOR ASSY. – HOT IDLE	9B532												
	CM 903			AA						AG	AH		
JET – MAIN METERING	9533												
0' – 10,000 ft.	CJ 138	2			2	2	2	2	2				
Primary	PB8M 9533 A		2										
Secondary	CJ 186		2										
0' – 5,000 ft. – No. 51 F.	CJ 136			2									
5,000' – 10,000' – No. 49F.	CJ 137			2									
	CJ 134									2			
	CJ 145										2		

DESCRIPTION	PART NUMBER	CARBURETTOR PARTS LIST "Y TO AJ"											
		Y	Z	AA	AB	AC	AD	AE	AF	AG	AH	AI	AJ
LEVER ASSY. – FAST IDLE PICK UP	**9A535**												
O.N.R.	B7AZ 9A535 C		Z										
PLUNGER – FAST IDLE CAM	**9537**												
	78 9537 A		Z										
LEVER – THROTTLE SHAFT AUX.	**9A537**												
	CM 1477	Y		AA	AB			AE	AF	AG	AH		
Screw	380808 S	Y		AA	AB			AE	AF	AG	AH		
LEVER ASSY. – FAST IDLE ADJ. THROTTLE DRIVE	**9538**												
	CM 1105	Y					AD						
O.N.R.	B7T 9538 A		Z										
	C7AZ 9538 A			AA									
	CM 1323				AB	AC		AE	AF	AG			
Lockwasher	34903 S7	Y		AA	AB	AC	AD	AE	AF	AG	AH		
Nut – No. 10 – 32 – lever to throttle shaft	34079 S7/8	Y		AA	AB	AC	AD	AE	AF	AG	AH		
Screw – fast idle cam lever – O.N.R.	370051 S		Z										
SPRING – THROTTLE RETURN	**9A538**												
Throttle control	C7AZ 9A538 D	Y		AA	AB		AD	AE	AF	AG	AH		
Throttle control	CM 1249		Z										
Accelerator pump linkage	C7AZ 9A538 C			AA	AB	AC	AD	AE	AF	AG	AH		
SCREW – IDLE ADJUST	**9B538**												
	C3TZ 9B538 A	Y					AD						
O.N.R.	C7AZ 9B538 A			AA									
	D1AZ 9B538 A				AB	AC		AE	AF		AH		
Screw, idle adjusting – O.N.R.	382297 S									AG			
NEELDE – IDLE ADJUST	**9541**												
	CM 1087	2			2	2	2	2	2	2	2		
	CM 947		2										
	CM 657			2									
LEVER – CHOKE CONTROL	**9D541**												
	CM 1120		Z										
ROD – ACCEL. PUMP LINK TO THROTTLE LEVER	**9B542**												
	CM 695	Y		AA	AB	AC	AD	AE	AF	AG	AH		
PISTON ASSY. – PUMP	**9B544**												
	CP 50	Y		AA	AB	AC	AD	AE	AF	AG	AH		
PLATE – CHOKE	**9545**												
	CM 659	Y		AA	AB	AC	AD	AE	AF				
	C3AZ 9545 B		Z										
	CM 1754									AG	AH		
Screw – No. 6 – 32 x .31" – choke plate	375016 S2	2		2	2	2	2	2	2	2	2		
SPRING – ACCEL. PUMP RETURN	**9B545**												
	CM 1125		Z										
SHAFT ASSY. – CHOKE	**9546**												
	CM 1145	Y			AB	AC	AD	AE	AF	AG	AH		
	B7A 9546 B		Z										
	CM 660			AA									
SHAFT – CHOKE PLATE (REFER 9546)	**9547**												
DASHPOT ASSY.	**9B549**												
	CD6	Y			AB	AC		AE	AF		AH		
Nut – 5/16"	33923 S7	Y			AB	AC		AE	AF		AH		
Screw	383547 S2	Y			AB	AC		AE	AF		AH		

DESCRIPTION	PART NUMBER	CARBURETTOR PARTS LIST "Y TO AJ"											
		Y	Z	AA	AB	AC	AD	AE	AF	AG	AH	AI	AJ
FLOAT ASSY.	**9550**												
	CM 661	Y		AA	AB	AC	AD	AE	AF	AG	AH		
	CM 639		2										
BRACKET – DASHPOT MOUNTING	**9B550**												
	CM 1113	Y											
	CM 908			AA									
Screw assy. – No. 10 – 32 x ½"	43252 S8	Y		AA									
LEVER – CHOKE SHAFT	**9551**												
	CM 1144	Y			AB	AC	AD	AE	AF	AG	AH		
Screw – lever to shaft	383547 S	Y			AB	AC	AD	AE	AF	AG	AH		
VALVE ASSY. – POWER	**9G551**												
	C7AZ 9G551 A	Y		AA	AB	AC	AD	AE	AF	AG	AH		
BAFFLE – METERING BODY	**9553**												
	B8A 9553 C		Z										
PISTON ASSY. – POWER VALVE	**9G553**												
	C8AZ 9G553 A	Y			AB	AC	AD	AE	AF	AG	AH		
	C7AZ 9G553 A			AA									
VALVE – AIR	**9H555**												
R.H.	CM 1092	Y			AB	AC	AD	AE	AF		AH		
L.H.	CM 1093	Y			AB	AC	AD	AE	AF		AH		
R.H. – O.N.R.	C7AZ 9H555 A			AA									
L.H.	C7AZ 9H555 B			AA									
R.H.	CM 1760									AG			
L.H.	CM 1761									AG			
Screw – No. 6 – 32 x 0.31"	381761 S	4		4	4	4	4	4	4	4	4		
SPRING – AIR VALVE	**9H556**												
	CM 1270	Y			AB	AC	AD	AE	AF	AG	AH		
	C7AZ 9H556 B			AA									
VALVE ASSY. – FUEL BOWL VENT	**9557**												
	C7AZ 9557 A			AA									
HOUSING – AIR VALVE SPRING	**9H557**												
	C7AZ 9H557 A			AA									
SHAFT – FLOAT LEVER	**9558**												
	CM 663	Y		AA	AB	AC	AD	AE	AF	AG	AH		
	CM 640		2										
RETAINER – AIR VALVE SPRING HOUSING O.N.R.	**9H558**												
	C7AZ 9H558 A			AA									
DIAPHRAGM – ACCELERATOR PUMP	**9B559**												
	CM 193		Z										
GASKET – FLOAT BOWL	**9561**												
	CG 223	Y		AA	AB	AC	AD	AE	AF	AG			
	CG 229		2										
PLUG Fuel level check 5/16" – 24 x ¼"	**9562**												
	B7T 9562 A		2										
VALVE & SEAT ASSY.	**9564**												
Primary – includes 9569 gasket	CV 58 A	Y			AB		AD	AE		AG	AH		
Primary	CV 58 A			AA		AC			AF				
Secondary – includes 9569 gasket	CV 86 A	Y		AA	AB	AC	AD	AE	AF	AG	AH		
	CV 66		2										

DESCRIPTION	PART NUMBER	CARBURETTOR PARTS LIST "Y TO AJ"											
		Y	Z	AA	AB	AC	AD	AE	AF	AG	AH	AI	AJ
ECONOMIZER	9A565												
	CE 18		Z										
SPRING – CHOKE	9D565												
	CM 1121		Z										
HOUSING – SECONDARY DIAPHRAGM	9A566												
	CM 923		Z										
Screw – No. 8 – 1" long	43407 S8		3										
GASKET – HOT IDLE COMPENSATOR	9B567												
O.N.R.	COLE 9B567 A									AG	AH		
GASKET – FUEL INLET SEAT	9569												
Primary – 0.51" I.D. – 0.62" O.D. – O.N.R.	C7AZ 9569 A	Y		AA	AB	AC	AD	AE	AF	AG	AH		
Secondary – 0.38" I.D. – 0.50" O.D.	C7AZ 9569 B	Y		AA	AB	AC	AD	AE	AF	AG	AH		
O.N.R.	EAA 9569 A		2										
SPRING – THROTTLE RETURN													
(REFER 9737)	9B569												
CONNECTOR – SECONDARY DIAPHRAGM													
CONTROL	9S569												
	D2AZ 9S569 A									AG			
SPRING – FLOAT	9F570												
O.N.R.	C6AZ 9F570 A		2										
SPRING – PUMP LEVER ADJ. SCREW	9571												
O.N.R.	C4TZ 9571 A		Z										
CUP – PUMP PISTON	9572												
	CM 651	Y		AA	AB	AC	AD	AE	AF	AG	AH		
RETAINER – ACCELERATOR PUMP													
CHECK VALVE	9575												
Wire	CM 652	Y		AA			AD						
Plastic	CM 664	Y		AA	AB	AC	AD	AE	AF	AG	AH		
VALVE – ACCELERATOR PUMP CHECK	9576												
Plastic	CM 910	Y		AA		AC		AE	AF				
O.N.R.	B5A 9576 A		Z										
Ball – 3/16" steel accel. pump check	371350 S	Y		AA			AD	AE	AF	AG			
TUBE – FLOAT BOWL CONNECTOR	9H576												
	C9AZ 9H576 A		Z										
SPRING – NEEDLE IDLE ADJUST	9578												
	40 9578	3	3	3	3	3	3	3	3	3	3		
	CM 609		Z										
	CM 653			AA									
	380806 S			AA									
PISTON & ROD ASSY. – AIR VALVE													
DAMPENER	9H578												
	CM 1683 A	Y			AB	AC	AD	AE	AF	AG	AH		
	C7AZ 9H578 A			AA									
PIN – FAST IDLE ADJUST. LEVER	9579												
	B9A 9579 A			AA									

DESCRIPTION	PART NUMBER	CARBURETTOR PARTS LIST "Y TO AJ"											
		Y	Z	AA	AB	AC	AD	AE	AF	AG	AH	AI	AJ
GASKET – PUMP DISCHARGE NOZZLE	**9580**												
	B7AE 9580 A		2										
SHAFT ASSY. – THROTTLE	**9581**												
Shaft air valve	CM 654	Y		AA	AB	AC	AD	AE	AF	AG	AH		
Lever & shaft assy. – throttle	CM 1095									AG			
Kit	CM 1097	Y											
Kit	CM 1047 A			AA									
	CM 1294				AB	AC		AE	AF		AH		
	CM 1295						AD						
Screw – throttle lever to kickdown lever	379622 S78							AE		AG	AH		
Screw – throttle lever to kickdown cable	375016 S2							AE					
LEVER – AIR VALVE DAMPENER	**9H582**												
	CM 1692	Y			AB		AD	AE	AF	AG	AH		
Pin	C7AZ 9H582 A			AA									
	353070 S	2						2		2			
	383070 S						2		2		2		
LEVER	**9583**												
Secondary throttle stop	C7AZ 9583 C	Y		AA	AB	AC	AD	AE	AF	AG	AH		
Secondary throttle stop	CM 1256	Y					AD						
Secondary diaphragm	B8A 9583 C		Z										
	PL 9583 A							AE	AF				
Lockwasher – No. 10	34803 S78	Y		AA									
Screw – O.N.R.	370051 S		Z										
Nut – lever to shaft	34079 S78						AD	AE	AF	AG	AH		
Lockwasher – lever to shaft	34903 S7						AD	AE	AF	AG	AH		
Rivet – lever to carby.	380098 S2							2	2				
LINK – AIR VALVE DAMPENER	**9H583**												
	CM 1684	Y			AB	AC	AD	AE	AF	AG	AH		
	C7AZ 9H583 B			AA									
PIN – AIR VALVE DAMPENER	**9H584**												
Primary & secondary	CM 837			4									
Retainer – air valve dampener pin	377918 S8B			AA									
PLATE – THROTTLE	**9585**												
Primary	CM 1100	2		2	2	2	2	2	2	2	2		
Secondary	CM 969	2		2	2	2	2	2	2				
Secondary – O.N.R.	CM 1123		2							2	2		
Primary	C3AZ 9585 B		2										
Screw – O.N.R.	353358 S	4											
Screw	383677 S			8	8	8	8	8	8	8	8		
SCREW	**9586**												
Throttle plate – primary	B8A 9586 A		4										
BRACKET – THROTTLE EMISSION CONTROL	**9J586**												
O.N.R.	D0AZ 9J586 A		Z							AG	AH		
GASKET – ECONOMIZER BODY	**9A588**												
Power valve	B7AZ 9A588 A		Z										
LEVER – ACCEL. PUMP	**9D591**												
	CM 876		Z										
Screw – No. 10 x 32 UNF – lever to body	372999 S		Z										
Nut lever adjust. – O.N.R.	370052 S2		Z										
Retainer	97645 S		Z										
GASKET – FUEL BOWL SCREW	**9592**												
	B7A 9592 A		8										

DESCRIPTION	PART NUMBER	CARBURETTOR PARTS LIST "Y TO AJ"											
		Y	Z	AA	AB	AC	AD	AE	AF	AG	AH	AI	AJ
LEVER & SHAFT ASSY. – THROTTLE													
PLATE	9A592												
Secondary	CM 841	Y			AB	AC	AD	AE	AF	AG	AH		
Secondary	CM 680			AA									
Nut – shaft	34079 S7/8	Y		AA									
BRACKET – CHOKE CONTROL	9595/7												
	B8TZ 9595 A		Z										
CAM – FAST IDLE	9597												
	CM 1124		Z										
	CM 665			AA									
	CM 1451	Y			AB	AC	AD	AE	AF	AG	AH		
Screw	384170 S	Y			AB	AC	AD	AE	AF	AG	AH		
SPRING – ACCELERATOR PUMP	9D598												
	CM 1037			AA	AB	AC	AD	AE	AF	AG	AH		
RETAINER – ACCEL. PUMP SPRING	9599												
	CM 1038	Y		AA	AB	AC	AD	AE	AF	AG	AH		
ROD – CHOKE KICK	9A599												
	C7AZ 9A599 A	Y		AA	AB	AC	AD	AE	AF				
	B8TZ 9A599 A		Z										
	CM 1755									AG	AH		
Ring – rod to shaft	377918 S8B	Y		AA	AB	AC	AD	AE	AF	AG	AH		
'O' RING – FUEL VALVE SEAT	9609												
	B6A 9609 A		2										
GASKET – METERING BODY	9A618												
	CG 224		2										
SEAT – IDLE NEEDLE	9634												
	B7A 9634 A		2										
SHAFT & LEVER – CHOKE HOUSING	9A753												
	CM 817 A	Y		AA	AB	AC	AD	AE	AF	AG	AH		
ADAPTOR – CHOKE CONTROL TUBE	9C786												
	C8VY 9C786 A	Y			AB	AC	AD	AE	AF	AG	AH		
CLAMP – CHOKE OUTER CABLE	9792												
	8BA 9792		Z										
Retainer	353610 S8		Z										
Screw	31061 S8		Z										
SPACER – CHOKE THERMOSTAT LEVER	9812												
Not serviced	B5AZ 9812 A		Z										
PLATE – FAST IDLE CAM	9838												
	B7T 9838 A		Z										
WASHER – CHOKE SPRING	9839												
O.N.R.	B7T 9839 A		Z										
PISTON ASSY. – CHOKE	9840												
	CM 1287 A	Y			AB	AC	AD	AE	AF				
	CM 624			AA									
	CM 1287 B									AG	AH		
Screw – piston to shaft – O.N.R.	50802 S7							AE	AF	AG	AH		

DESCRIPTION	PART NUMBER	CARBURETTOR PARTS LIST "Y TO AJ"											
		Y	Z	AA	AB	AC	AD	AE	AF	AG	AH	AI	AJ
PLATE AND STUD BACK UP	9841												
O.N.R.	B7T 9841 A		Z										
CLAMP – THERMOSTATIC CHOKE HOUSING	9842												
O.N.R.	CM 805	Y					AD						
	B6A 9842 A		Z										
	CM 666			AA									
	CM 1045				AB	AC		AE	AF		AH		
	CM 1742									AG			
Screw – No. 8 – 32 x ½" – O.R.B. C7NN-10N863-A	31077 S43	3											
Screw – O.N.R.	31053 S		3										
Screw choke housing	31061 S8				3	3	3	3	3	3	3		
COVER ASSY. – THERMOSTAT	9848												
Kit	CM 1242	Y											
	CM 678			AA									
	CM 1243				AB	AC	AD	AE	AF	AG	AH		
BUSHING – CHOKE HOUSING	9851												
	CM 668	Y		AA	AB	AC	AD	AE	AF	AG	AH		
GASKET – THERMOSTATIC CHOKE HOUSING	9853												
	B7A 9853 B		2										
SOLENOID – THROTTLE EMISSION	9D856												
	D1AZ 9D856 C		Z										
Nut – solenoid retaining – 7/16" – 20 – (not serviced)	D3AZ 9D856 A									AG	AH		
	45219 S2									AG	AH		
SHIELD – CHOKE THERMOSTAT	9861												
	D00Z 9861 A	Y			AB	AC	AD	AE	AF	AG	AH		
GASKET – THERMOSTATIC CHOKE HOUSING	9871												
	CG 102	Y				AC							
	CG 336 B				AB		AD	AE	AF	AG	AH		

DESCRIPTION	PART NUMBER	CARBURETTOR PARTS LIST "AK TO AV"											
		AK	AL	AM	AN	AO	AP	AQ	AR	AS	AT	AU	AV
GASKET SET	**9502**												
	CG 264 B	AK	AL	AM	AN	AO							
	XB 9502 B						AP	AQ					
KIT – MINOR REPAIR	**9A586**												
	CT 499 C	AK	AL	AM	AN	AO							
Stud – 5/16" – 18 – 24 x 1.50" – carburettor retaining	88391 S	4	4	4	4	4	4	4					
Nut – 5/16" – 24 – carburettor retaining	351089 S	4	4	4	4	4	4	4					
Cap – 3/16" – vacuum take-off	380614 S	AK	AL	AM	AN	AO	AP	AQ					
LIMITER IDLE ADJUSTING NEEDLE	**9J500**												
	CM 747	2	2	2	2	2							
	XB 9J500 B						2	2					
SEAL – FAST IDLE ROD	**9B501**												
	CM 974	AK	AL	AM	AN	AO							
WEIGHT – PUMP DISCHARGE BALL	**9B511**												
	CM 1126	AK	AL	AM	AN	AO							
Ball – 3/16" steel accel. pump inlet passage	371350 S	AK	AL	AM	AN	AO							
BODY ASSY. – MAIN	**9512**												
	XB 9512 F*						AP	AQ					
Screw – upper body to main body	43256 S8				4	4							
CONTROL & BRACKET ASSY. – VACUUM	**9S514**												
	D2AZ 9S514 B		AL	AM	AN	AO							
Screw – control to carby. not serviced	381797 S2		AL	AM	AN	AO							
ROD – FLOAT BOWL VENT	**9A515**												
	CM 1470		AL	AM	AN	AO							
GASKET – THROTTLE BODY TO MAIN BODY	**9516**												
	XB 9516 B						AP	AQ					
BODY ASSY. – THROTTLE	**9518**												
	XB 9518 D*						AP						
	XB 9518 E*							AQ					
BRACKET – BOWL VENT ROD	**9E520**												
	C6TZ 9E520 A		AL	AM	AN	AO							
SUPPORT ASSY. – BOOSTER VENTURI	**9A523**												
	CM 1463	AK			AN	AO							
	XB 9A523 C*						AP	AQ					
COVER ASSY. – VENTURI	**9B523**												
	XB 9B523 A						AP	AQ					
HORN ASSY. – AIR	**9524**												
	XB 9524 D*						AP	AQ					
Screw & washer – No. 10 – 32 x 5/8" not serviced	42356 S8	4											
SCREW – AIR HORN RETAINING	**9525**												
	XB 9525 A						2	2					
SPRING – POWER VALVE	**9E525**												
	XB 9E525 B*						AP	AQ					
SCREEN – FUEL FILTER	**9F525**												
	C4AZ 9F525 A	AK	AL	AM	AN	AO							

DESCRIPTION	PART NUMBER	CARBURETTOR PARTS LIST "AK TO AV"											
		AK	AL	AM	AN	AO	AP	AQ	AR	AS	AT	AU	AV
ROD – CARBURETTOR METERING	**9A526**												
	XB 9A526 B*						2	2					
COVER – ACCELERATOR PUMP	**9528**												
	CM 648 B	AK	AL	AM	AN	AO							
Screw – No. 8 – 32 x 9/16" – cover to carb.	376262 S	4	4	4	4	4							
LINK – ACCELERATOR PUMP	**9529**												
	CM 647	AK											
	XB 9529 B*						AP	AQ					
ROD – FAST IDLE CAM	**9D530**												
	C3AZ 9D530 A	AK	AL	AM	AN	AO							
	XB 9D530 A						AP	AQ					
JET – MAIN METERING	**9533**												
	C3GY 9533 C	2											
	CJ 146				2	2							
	XB 9533 D*						2	2					
GASKET – BOOSTER VENTURI SUPPORT	**9A536**												
	B8AZ 9A536 A	AK	AL	AM	AN	AO							
Lower	XB 9A536 A						AP	AQ					
Upper	XB 9A536 B						AP	AQ					
LEVER ASSY. – FAST IDLE ADJ. THROTTLE DRIVE	**9538**												
	CM 1105	AK	AL	AM	AN	AO							
Lockwasher	34903 S7	AK			AN	AO							
Nut – No. 10 – 32 – lever to throttle shaft	34079 S7/8	AK			AN	AO							
SPRING – THROTTLE RETURN	**9A538**												
	XB 9A538 A						AP	AQ					
SCREW – IDLE ADJUST	**9B538**												
	C3TZ 9B538 A	AK	AL	AM	AN	AO							
Slow idle – short	XB 9B538 D						AP	AQ					
Fast idle – long	XB 9B538 C						AP	AQ					
NEEDLE – IDLE ADJUST	**9541**												
	CM 955	2	2	2	2	2							
	XB 9541 C*						2	2					
ROD – ACCEL. PUMP LINK TO THROTTLE LEVER	**9B542**												
	CM 1478	AK											
	CM 1526		AL	AM	AN	AO							
	XB 9B542 A						AP	AQ					
Clip – accel. pump link to throttle lever rod to overtravel pump lever	375894 S7	AK	AL	AM									
PISTON ASSY. – PUMP	**9B544**												
	XB 9B544 E						AP	AQ					
PLATE – CHOKE	**9545**												
	CM 1061	AK	AL	AM	AN	AO							
Screw – No. 6 – 32 x .31" choke plate	375016 S2	2	2	2	2	2							
SHAFT ASSY. – CHOKE	**9546**												
	CM 1088	AK	AL	AM	AN	AO							
	XB 9546 A						AP	AQ					
DASHPOT ASSY.	**9B549**												
	CD 15			AM									

DESCRIPTION	PART NUMBER	CARBURETTOR PARTS LIST "AK TO AV"											
		AK	AL	AM	AN	AO	AP	AQ	AR	AS	AT	AU	AV
DIAPHRAGM & RETAINER ASSY. – CHOKE CONTROL	**9J549**												
	CM 1283	AK	AL	AM	AN	AO							
Screw – diaphragm retaining – O.N.R.	358544 S8	AK	AL	AM	AN	AO							
FLOAT ASSY.	**9550**												
	CM 1062	AK	AL	AM	AN	AO							
	XB 9550 A						AP	AQ					
Screw 8 – 32 x 7/16" allen hd. diaphragm retainer – O.N.R.	358544 S8	AK	AL	AM	AN	AO							
LEVER – CHOKE SHAFT	**9551**												
	CM 1091	AK	AL	AM	AN	AO							
	XB 9551 A						AP	AQ					
Screw – pan head – O.N.R.	50802 S7	AK	AL	AM	AN	AO							
VALVE ASSY. – POWER	**9G551**												
	XB 9G551 B*						AP	AQ					
PLATE – AIR DISTRIBUTION O.N.R.	**9F553**												
	D0AZ 9F553 A	AK	AL	AM	AN	AO							
LEVER – CHOKE CONTROL DIAPHRAGM	**9J553**												
	D1AZ 9J553 A	AK	AL	AM	AN	AO							
Spring – choke lever coiled (not serviced)	67529 S2	AK	AL	AM	AN	AO							
COVER – CHOKE CONTROL DIAPHRAGM	**9J554**												
	D0AZ 9J554 A	AK	AL	AM	AN	AO							
Screw – No. 8 – 32 x 9/16"	376262 S	3	3	3	3	3							
SHAFT – FLOAT LEVER	**9558**												
	CM 183	AK	AL	AM	AN	AO							
	XB 9558 A						AP	AQ					
SCREW – FAST IDLE CAM.	**9D558**												
	XB 9D558 A						AP	AQ					
SWIVEL – CHOKE DIAPHRAGM HOUSING	**9F558**												
	C5AZ 9F558 A	AK	AL	AM	AN	AO							
DIAPHRAGM – ACCELERATOR PUMP	**9B559**												
	CM 463	AK	AL	AM	AN	AO							
SPRING – BOWL VENT ROD (ALSO REFER 9636)	**9560**												
	CM 1471	AK	AL	AM	AN	AO							
GASKET – FLOAT BOWL	**9561**												
	CG 316	AK											
	CG 256 A		AL	AM	AN	AO							
	XB 9561 B						AP	AQ					
GASKET – ECONOMIZER COVER	**9563**												
	CG 234	AK	AL	AM									
VALVE & SEAT ASSY. Includes gasket 9569 & retainer 9599	**9564**												
	CV 54 A	AK	AL	AM	AN	AO							
	XB 9564 B*						AP	AQ					
ECONOMIZER	**9A565**												
	CE 76	AK	AL	AM									
	CE 75				AN	AO							
ROD – CHOKE DIAPHRAGM CONTROL O.N.R.	**9S567**												
	D2AZ 9S567 C		AL	AM	AN	AO							
Ring, rod to control assy.	377918 S8B		AL	AM	AN	AO							

DESCRIPTION	PART NUMBER	CARBURETTOR PARTS LIST "AK TO AV"											
		AK	AL	AM	AN	AO	AP	AQ	AR	AS	AT	AU	AV
GASKET – FUEL INLET SEAT	**9569**												
	EDB 9569 B		AL	AM	AN	AO							
	XB 9569 A						AP	AQ					
SPRING – THROTTLE RETURN (REFER 9737)	**9B569**												
BUSHING – SPRING RETAINING	**9F569**												
	XB 9F569 A						2	2					
SPRING – FLOAT	**9F570**												
	C3AZ 9F570 A	AK											
HOUSING ASSY. – CHOKE	**9A575**												
	CC 58 A	AK											
	CC 62 A		AL	AM	AN	AO							
Screw – housing retaining not serviced	378547 S78	3	3	3	3	3							
VALVE – ACCELERATOR PUMP CHECK	**9576**												
	CM 825	AK	AL	AM	AN	AO							
SCREW – PUMP DISCHARGE NOZZLE	**9577**												
	CM 607	AK	AL	AM	AN	AO							
	XB 9577 B*						2	2					
LEVER – FAST IDLE CAM	**9F577**												
	CM 492	AK	AL	AM	AN	AO							
Screw No. 6 – 32 x ¾" hex. head fast idle cam.	372307 S	AK	AL	AM	AN	AO							
SPRING – NEEDLE IDLE ADJUST	**9578**												
	40 9578	3	3	3	3	3							
	CM 609	AK	AL	AM	AN	AO							
	XB 9578 A				2	2							
Screw – normal idle adj.	355107	AK	AL	AM	AN	AO							
SHAFT ASSY. – THROTTLE	**9581**												
	CM 1099 A	AK											
	CM 1098 B		AL	AM	AN	AO							
	XB 9581 D*						AP						
	XB 9581 C*							AQ					
Screw – throttle lever to kick down lever	379622 S78				AN	AO							
Screw – throttle lever to kick down cable	375016 S2					AO							
LEVER	**9583**												
	PL 9583 A				AN	AO							
Rivet – lever to carby.	380098 S2				2	2							
PLATE – THROTTLE	**9585**												
	C4MY 9585 A	2	2	2	2	2							
	XB 9585 B						2	2					
Screw – plate retaining not serviced	383253 S2				4	4							
SCREW	**9586**												
Throttle plate	XB 9586 C*						4	4					
Choke plate	XB 9586 B						2	2					
BRACKET – THROTTLE EMISSION CONTROL	**9J586**												
	C9AZ 9J586 A	AK				AO							
O.N.R.	C8AZ 9J586 A			AM									
O.N.R.	D00Z 9J586 A		AL	AM									
Screw & washer – No. 10 – 32 x ½"	43252 S8	AK				AO							
SPRING – CHOKE LEVER	**9587**												
	CM 1271	AK	AL	AM	AN	AO							

DESCRIPTION	PART NUMBER	CARBURETTOR PARTS LIST "AK TO AV"											
		AK	AL	AM	AN	AO	AP	AQ	AR	AS	AT	AU	AV
GASKET – ECONOMIZER BODY	**9A588**												
	CM 533	AK	AL	AM	AN	AO							
	XB 9A588 A						AP	AQ					
CAM – FAST IDLE	**9597**												
	CM 1268	AK			AN	AO							
	CM 1268 A		AL	AM									
	XB 9597 E*						AP	AQ					
Retainer - "C" washer	351825 S	2	2	2	2	2							
Screw – cam retaining	372307 S				AN	AO							
LEVER – DECHOKE OVERRIDE	**9J598**												
O.N.R.	D0AZ 9J598 B	AK											
O.N.R.	D20Z 9J598 A		AL	AM	AN	AO							
Nut No. 10 – 32 x 1/8"	34079 S7/8	AK	AL	AM	AN	AO							
Lockwasher – No. 10	34803 S78	AK	AL	AM	AN	AO							
RETAINER – FLOAT LEVER SHAFT	**9599**												
	CM 1065	AK											
	CM 1469		AL	AM	AN	AO							
	XB 9599 A						AP	AQ					
ROD – CHOKE KICK	**9A599**												
	CM 1066	AK	AL	AM	AN	AO							
	XB 9A599 A						AP	AQ					
Ring – rod to shaft	377918 S8B	AK	AL	AM	AN	AO							
SCREW – ACCELERATOR PUMP ARM	**9C631**												
	XB 9C631 A						AP	AQ					
SPRING – PUMP PISTON	**9636**												
	CM 544	AK											
	CM 1527		AL	AM	AN	AO							
SHAFT & LEVER – CHOKE HOUSING	**9A753**												
	C4AZ 9A753 B	AK											
	CM 1510		AL	AM	AN	AO							
LEVER – CHOKE THERMOSTAT	**9A754**												
	D1AZ 9A754 C	AK	AL	AM	AN	AO							
LEVER – TRANSMISSION KICK DOWN ROD	**9C772**												
	XB 9C772 A							AQ					
CLAMP – THERMO CHOKE HOUSING	**9824**												
	CM 1742		AL	AM									
CLIP – ACCELERATOR PUMP LINK ROD	**9825**												
	CM 1695				AN	AO							
PISTON ASSY. – CHOKE	**9840**												
	XB 9840 B*						AP	AQ					
CLAMP – THERMOSTATIC CHOKE HOUSING	**9842**												
	CM 458	AK	AL	AM									
	CM 1742				AN	AO							
	XB 9842 A						3	3					
Screw choke housing	31061 S8		3	3	3	3							
COVER ASSY. – THERMOSTAT	**9848**												
Kit	CM 1455	AK											
	CM 1259		AL	AM	AN	AO							
	XB 9848 A						AP	AQ					

DESCRIPTION	PART NUMBER	CARBURETTOR PARTS LIST "AK TO AV"											
		AK	AL	AM	AN	AO	AP	AQ	AR	AS	AT	AU	AV
BUSHING – CHOKE HOUSING	**9851**												
	CM 751	AK	AL	AM	AN	AO							
	XB 9851 A						AP	AQ					
GASKET – THERMOSTATIC CHOKE HOUSING	**9853**												
	CG 93	AK	AL	AM	AN	AO							
	XB 9853 A						AP	AQ					
SOLENOID – THROTTLE EMISSION	**9D856**												
	D0AZ 9D856 A	AK											
	D2AZ 9D856 E		AL	AM									
	D3AZ 9D856 A				AN	AO							
Nut – solenoid retaining – 7/16" – 20 (not serviced)	45219 S2				AN	AO							
SHIELD – CHOKE THERMOSTAT	**9861**												
	C9ZZ 9861 A	AK	AL	AM									
	D2AZ 9861 A				AN	AO							
O.N.R. Screw – choke housing shield	376262 S	2	2	2	2	2							
GASKET – THERMOSTATIC CHOKE HOUSING	**9871**												
	CG 317	AK	AL	AM	AN	AO							
	XB 9871 A						AP	AQ					
COVER – ECONOMIZER VALVE	**9930**												
	CM 728	AK	AL	AM	AN	AO							
Screw – cover retaining – No. 8 – 32 x 3/8" (not serviced)	43251 S8	4	4	4	4	4							

MODEL	BODY TYPE	REMARKS	UNIT	PART NUMBER		
– – 9E531 – – TUBE – CARBURETTOR BOWL VENT TO CANNISTER						
XB, ZG	All	6 cyl. – from 12/74	1	XB	9E531	A*
XB, ZG	All	8 cyl. – from 12/74	1	XB	9F531	B*
– – 9F531 – – TUBE – CARBURETTOR BOWL VENT TO CANNISTER (REFER 9E531)						
– – 9A589 – – SPACER – CARBURETTOR TO MANIFOLD						
XA, ZF	All	302 c.i.d. – to 12/73	1	XA	9A589	A
XB, ZG	All	302 c.i.d. – from 12/73 to 9/74	1	XB	9A589	A
XB, ZG	All	302 c.i.d. – from 9/74		XB	9A589	B
XA	54H, 65H		1	C9ZZ	9A589	C
XB, ZG	All	351 c.i.d. 2V – from 12/74	1	XB	9A589	C*
XA, ZF	All	302 c.i.d. – bolt – 5/16" – 18 x 1.0" – spacer to intake manifold	4	20386 S36		
– – 9C589/9D589 – – HOSE – WATER SPACER						
XA/B, ZF/G	All	302 c.i.d. – supply – to 9/74	1	XA	9C589	AA
XB, ZG	All	302 c.i.d. – supply – from 9/74	1	XB	9C589	A
XA/B, ZF/G	All	302 c.i.d. – return – to 9/74	1	XA	9C589	AA
XB, ZG	All	302 c.i.d. – return – from 9/74	1	XB	9C589	B

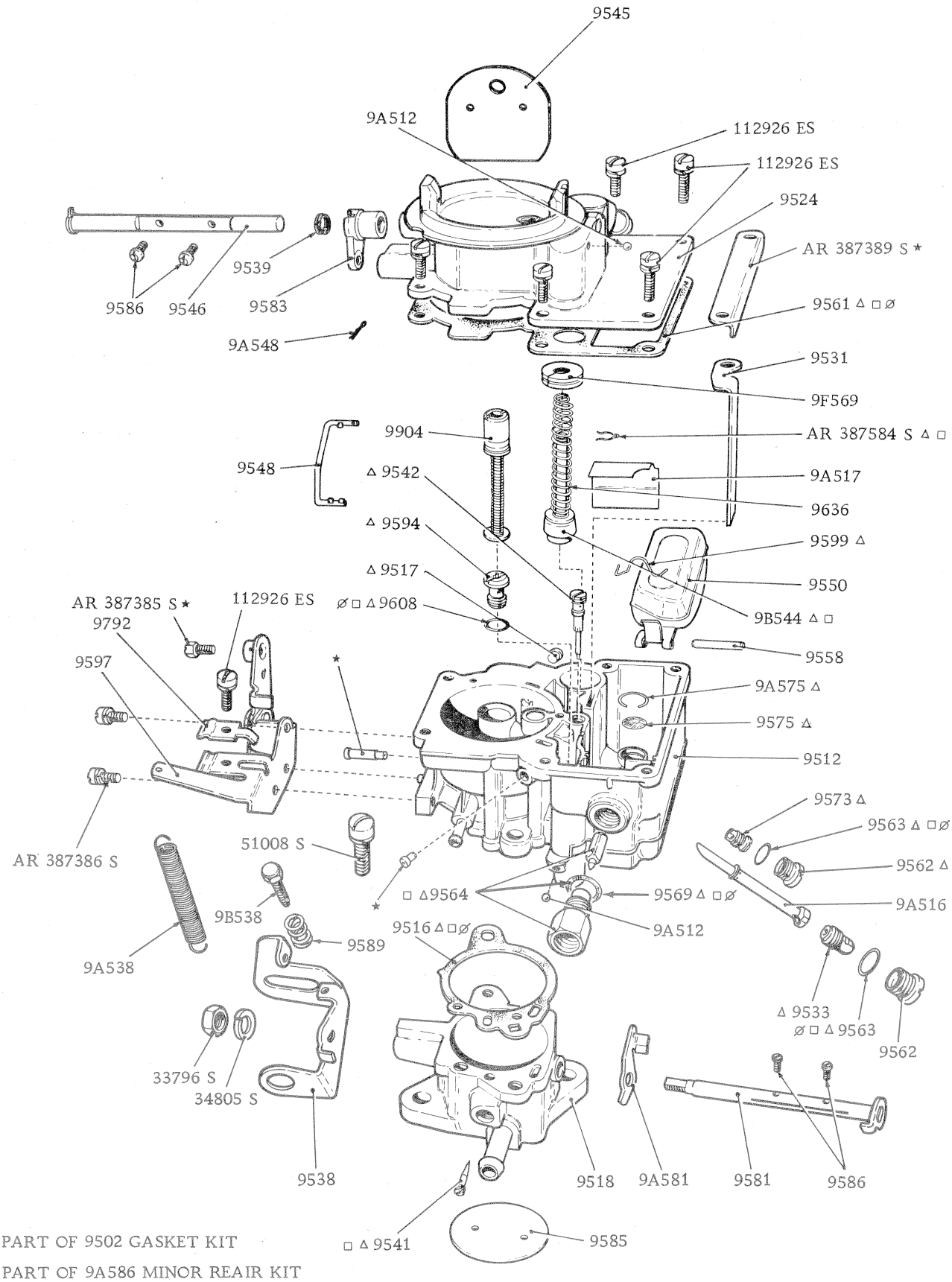

⌀ PART OF 9502 GASKET KIT

□ PART OF 9A586 MINOR REAIR KIT

△ PART OF 9590 MAJOR REPAIR KIT

CARBURETTOR ASSEMBLY 200/250 1V BENDIX/STROMBERG TYPE

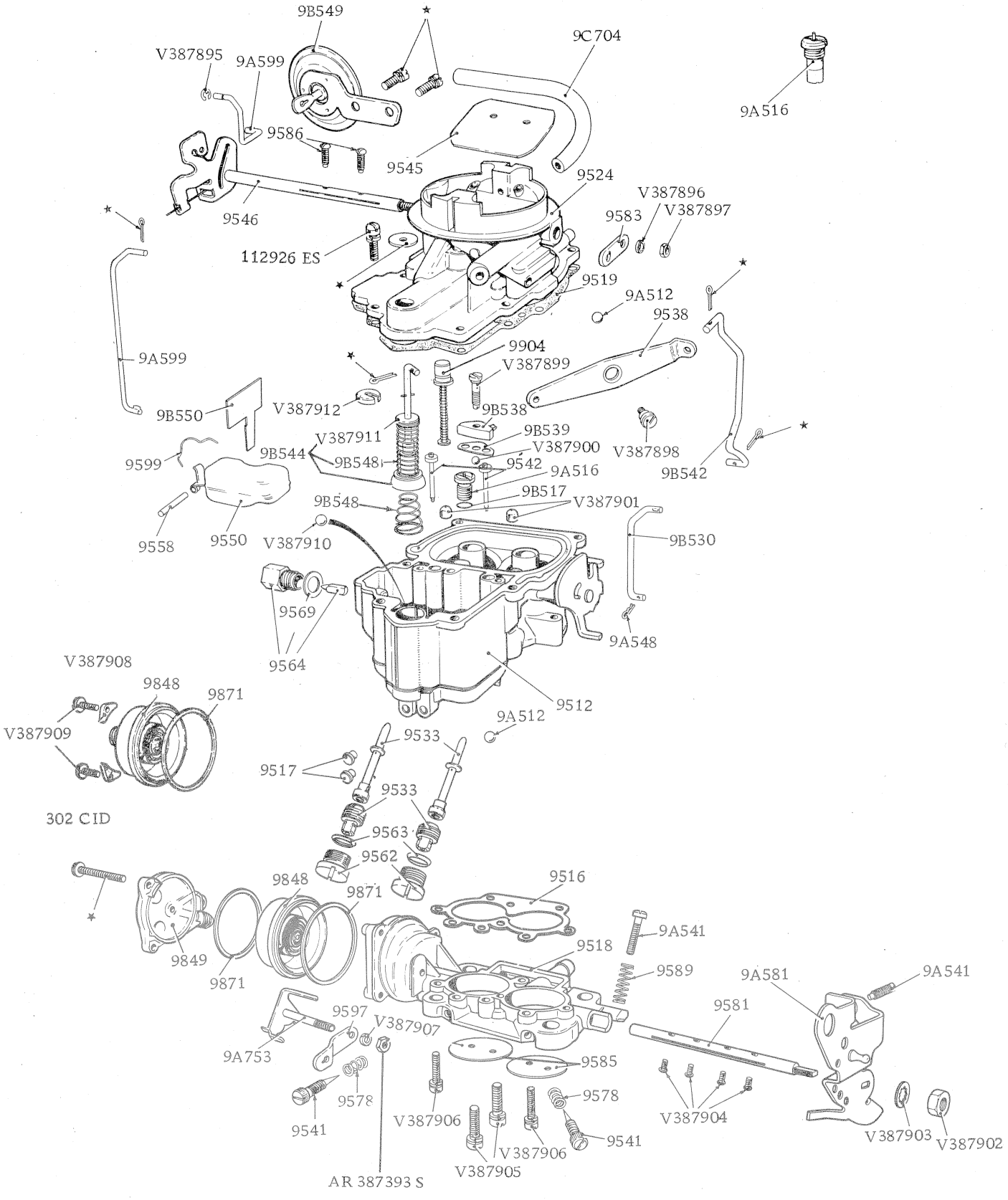

CARBURETTOR ASSEMBLY 250 2 V, 302 2 V BENDIX TYPE

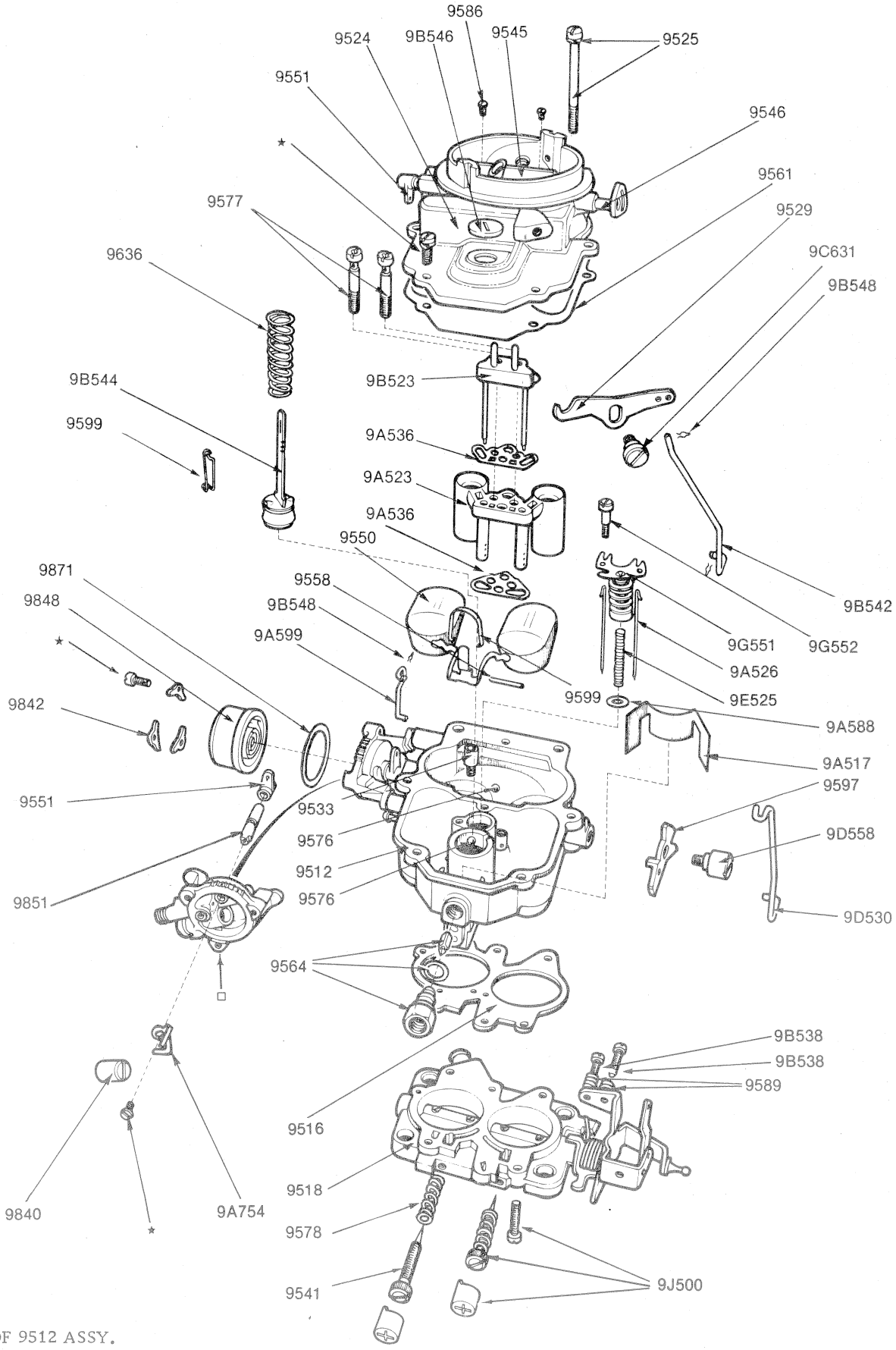

□ PART OF 9512 ASSY.

CARBURETTOR ASSEMBLY 302/351 2V EMAIL/CARTER TYPE

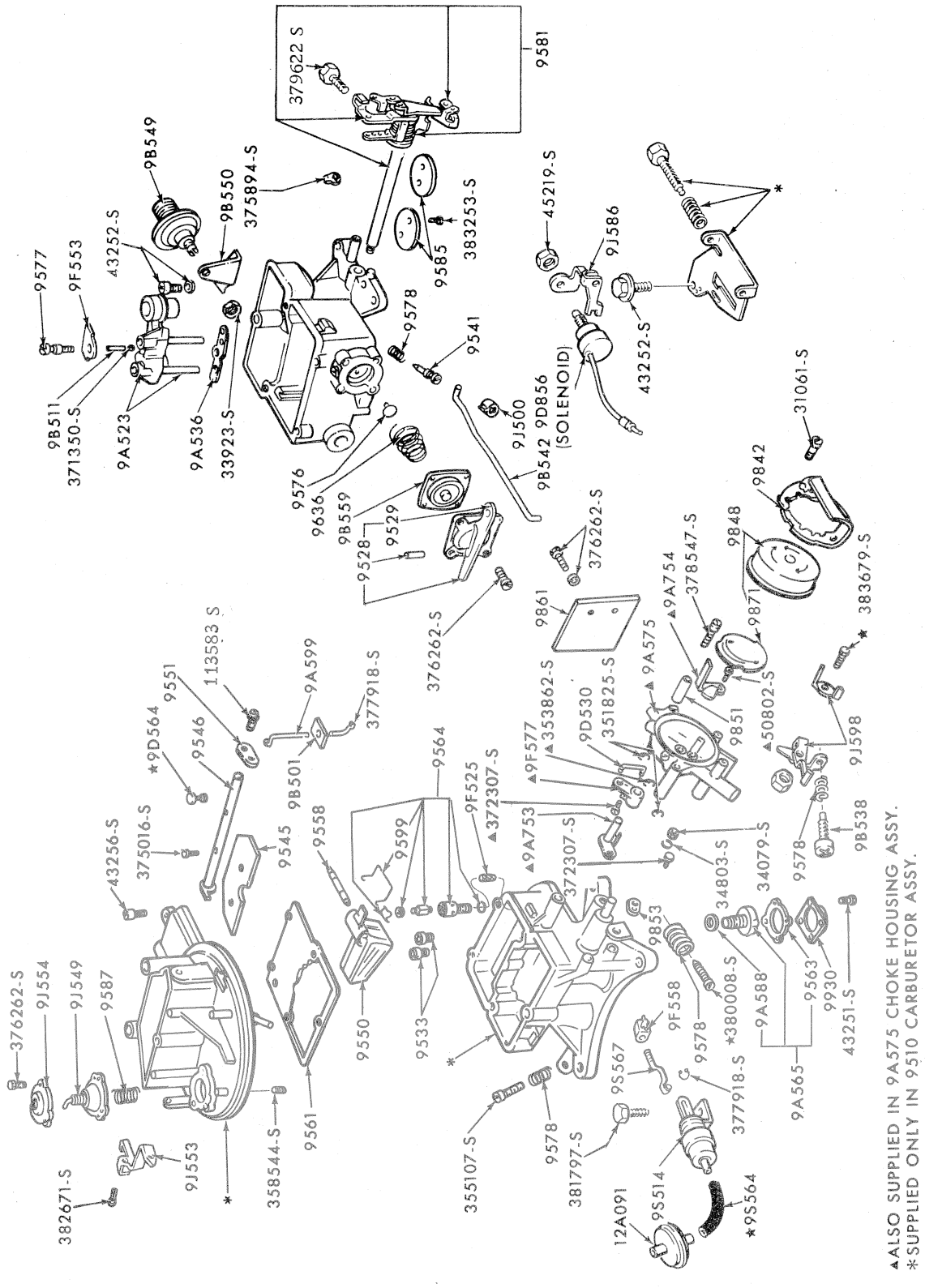

▲ALSO SUPPLIED IN 9A575 CHOKE HOUSING ASSY.
*SUPPLIED ONLY IN 9510 CARBURETOR ASSY.

CARBURETTOR ASSEMBLY 351 2 V FORD TYPE

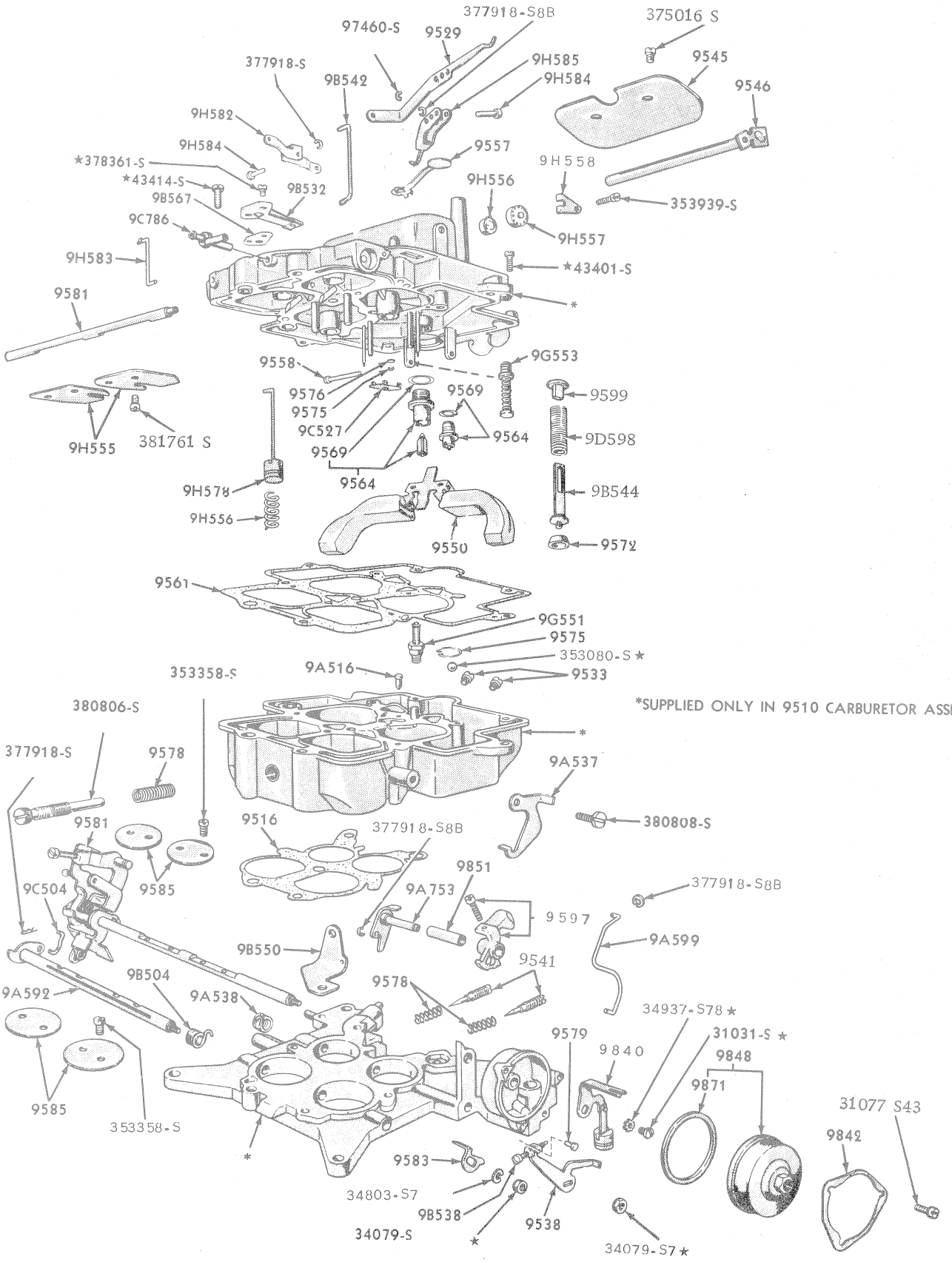

*SUPPLIED ONLY IN 9510 CARBURETOR ASSEMBLY

CARBURETTOR ASSEMBLY 351 4 V FORD TYPE

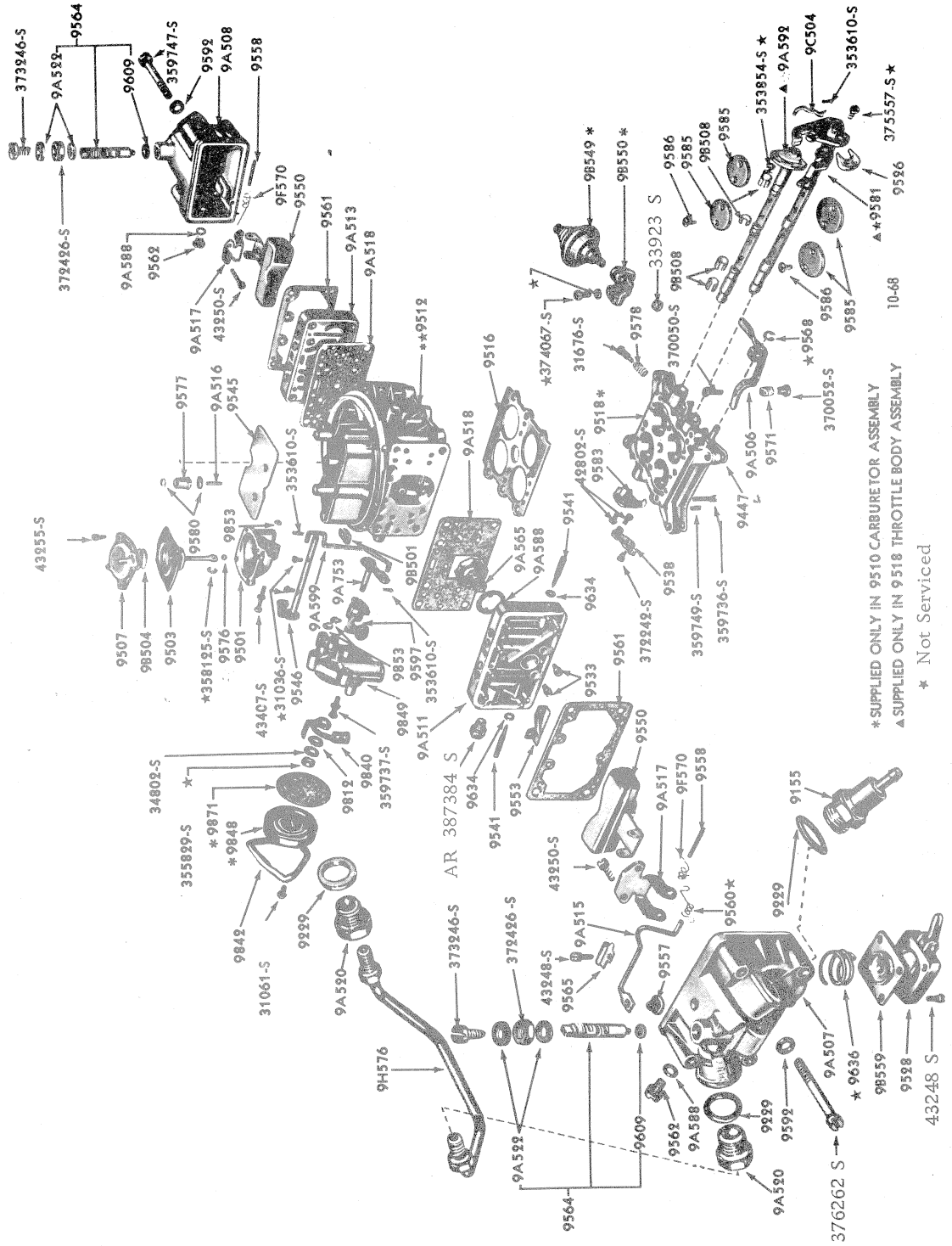

CARBURETTOR ASSEMBLEY GT HO 4V HOLLEY TYPE

MODEL	BODY TYPE	REMARKS	UNIT	PART NUMBER		
– – 9600 – – CLEANER ASSY. – CARBURETTOR AIR						
XA/B, ZF/G	All	200/250 c.i.d. 1V – to 12/74	1	XA	9600	DA
XB, ZG	All	200/250 c.i.d. 1V – from 12/74	1	XB	9600	BA*
XA/B, ZF/G	All	200/250 c.i.d. 1V – heavy duty – to 12/74	1	XA	9600	EA
XB, ZG	All	200/250 c.i.d. 1V – heavy duty – from 12/74	1	XB	9600	CA*
XA, ZF	All	250 c.i.d. 2V	1	XY	9600	CA
XA, ZF	All	302 c.i.d.	1	XY	9600	G
XA, ZF	All	302 c.i.d. – heavy duty	1	XY	9600	H
XB, ZG	All	302 c.i.d. – to 12/74	1	XB	9600	B
XB, ZG	All	302 c.i.d. – heavy duty – to 12/74	1	XB	9600	D
XB, ZG	All	302/351 c.i.d. 2V – from 12/74	1	XB	9600	AP*
XA/B, ZF/G	All	351 c.i.d. – to 12/74	1	D1AZ	9600	F
XB, ZG	54H, 65H	351 c.i.d. 4V – from 12/74	1	XB	9600	DA*
XA/B	54H, 65H	GT HO	1	C5ZZ	9600	W
XA/B, ZF/G	All	8 cyl. – stud – 5/16" – 18 – 24 x 1.50" – carby tc manifold	4	88391 S		
XA/B, ZF/G	All	6 cyl. & 302 c.i.d. – wing nut – 5/16" – 18 – air cleaner to carby.	1	AR 387219 S36		
XA/B, ZF/G	All	250 c.i.d. 2V – bolt – 5/16" x 18 – centre air cleaner	1	V 388243 S36		
XA/B, ZF/G	All	351 c.i.d. 2V – stud – ¼" – 20 x 5/16" – 8 x 3.5" – air cleaner to carby.	1	370971 S8		
XA	54H, 65H	Stud – ¼" – 20 – 20 x 4.16" – air cleaner to carby	1	380958 S		
XB, ZG	54H, 65H	Stud – air cleaner to carby – ¼" – 20 x 4.35"	1	383729 S37		
– – 9601 – – ELEMENT – AIR CLEANER						
XA/B, ZF/G	All	6 cyl. 1V & 302 c.i.d. – to 12/74	1	AFA 26		
XB, ZG	All	6 cyl. 1V – from 12/74	1	AFA 26		
XA, ZF	All	250 c.i.d. 2V	1	AFA 25		
XA/B, ZF/G	All	351 c.i.d. 2V & 4V auto trans. – to 12/74	1	FA 50		
XB, ZG	All	302/351 c.i.d. 2V & 351 c.i.d. 4V auto. trans. – from 12/74	1	FA 50		
XA/B	54H, 65H	351 c.i.d. 4V – man. trans.	1	AFA 20		
– – 9A601 – – ELEMENT – PRE-CARBURETTOR – AIR CLEANER						
XA/B, ZF/G	All	6 cyl. & 302 c.i.d. – h/duty dust pack	1	XW	9A601	A
– – 9A603 – – TUBE & SHROUD ASSY. – CARB. AIR CLEANER						
XA/B, ZF/G	All	351 c.i.d.	1	D1AZ	9A603	A
XB, ZG	All	302 c.i.d. – from 1/74	1	D1AZ	9A603	A
XA/B	All	Clamp – tube to duct	1	97262 S36		
– – 9E607 – – SWITCH – AIR SENSOR						
XA/B, ZF/G	All	351 c.i.d. 2V	1	D0ZZ	9E607	B
– – 9D625 – – EXTENSION – CARBURETTOR AIR CLEANER INLET TUBE LOWER						
XB, ZG	All	8 cyl. – from 12/74	1	XB	9D625	A*
– – 9A626 – – DUCT & VALVE CARB. – AIR CLEANER						
XB, ZG	All	302 c.i.d. – to 12/74	1	XB	9A626	A
XA/B, ZF/G	All	351 c.i.d. – to 12/74	1	D10Z	9A626	B
XB, ZG	All	302/351 c.i.d. 2V – from 12/74	1	XB	9A626	B*
XB	54H, 65H	351 c.i.d. 4V – from 12/74	1	D10Z	9A626	B
– – 9A627 – – BRACKET – CARBURETTOR AIR CLEANER						
XA/B	54H, 65H	Man. trans.	1	D0ZZ	9A627	C
– – 9E628 – – RETAINER – CRANKCASE EMISSION FILTER						
XB,ZG	All	From 12/74	1	D1AZ	9E628	A
– – 9652 – – TUBE ASSY. – CARB. AIR CLEANER HOT AIR						
XA/B, ZF/G	All	351 c.i.d. – paper & album – 2.02" I.D. – 18" long – cut to req'd length	1	C9UZ	9652	A
XB, ZG	All	302 c.i.d.	1	XB	9652	B
– – 9D653 – – CANNISTER – FUEL VAPOUR						
XB, ZG	All	From 12/74	1	XB	9D653	A*
– – 9654 – – GASKET – AIR CLEANER TO CARBY.						
XA/B, ZF/G	All	6 cyl. 1V	1	XY	9654	A
XA/B, ZF/G	All	250/302 c.i.d. 2V – to 12/74	1	C8DZ	9654	A
XB, ZG	All	302/351 c.i.d. 2V – from 12/74	1	C8DZ	9654	A
XA/B, ZF/G	All	351 c.i.d. – to 12/74	1	D0ZF	9654	C
XB	54H, 65H	351 c.i.d. 4V – from 12/74	1	D0ZF	9654	C

MODEL	BODY TYPE	REMARKS	UNIT	PART NUMBER		
– – 9D664 – – BRACKET – FUEL VAPOUR STORAGE CANNISTER						
XB, ZG	All	From 12/74	1	XB	9D664	A*
– – 9D668 – – TUBE – FUEL VAPOUR STORAGE CANNISTER PURGE						
XB, ZG	All	6 cyl. – from 12/74	1	XB	9D668	A*
XB, ZG	All	8 cyl. – from 12/74	1	XB	9D668	B*
XB, ZG	All	Clamp – 7/8" – tube to cannister	1	R7 21		
– – 9C670 – – BRACKET – AIR CLEANER DUCT SUPPORT						
XB, ZG	All	302 c.i.d. – to 12/74	1	XB	9C670	B
XB, ZG	All	6 cyl. – from 12/74	1	XB	9C670	BA*
XB, ZG	All	8 cyl. – from 12/74	1	XB	9C670	AA*
– – 9B672 – – RETAINER ASSY. – AIR CLEANER						
XA/B, ZF/G	All	6 cyl. 1V	1	XY	9B672	A
XA, ZF	All	250 c.i.d. 2V	1	XY	9B672	AC
XA/B, ZF/G	All	302 c.i.d. – to 12/74	1	XW	9B672	E
XB, ZG	All	8 cyl. – from 12/74	1	XB	9B672	A*
– – 9C672 – – PIN – AIR CLEANER RETAINING						
XA/B, ZF/G	All	6 cyl. 1V	1	XY	9C672	D
– – 9B676 – – ADAPTOR – CARBURETTOR AIR CLEANER DUCT TUBE						
XB, ZG	All	8 cyl. – from 12/74	1	XB	9B676	B*
– – 9D692 – – ADAPTOR – FUEL VAPOUR PURGE TUBE TO AIR CLEANER						
XB, ZG	All	From 12/74	1	D0AZ	9D692	B*
– – 9D695 – – FILTER ASSY. – CRANKCASE EMMISSION						
XB, ZG	All	From 12/74	1	XB	9D695	A*
– – 9D697 – – FILTER – CRANKCASE EMMISSION						
XB, ZG	All	From 12/74	1	XB	9D697	A*
– – 9700 – – CONTROL ASSY. – CARBY. CHOKE						
XA/B, ZF/G	All	6 cyl. 1V	1	XA	9700	AA
XA/B	65H	Use with CA-782 (9510)	1	XA	9700	BA
XA/B, ZF/G	All	6 cyl. 1V – nut 7/16" – 20 – control assy. to inst. panel – not serviced	3	373897 S8		
– – 9A702 – – ROD ASSY. – ACCEL. SHAFT TO BELLCRANK						
XA, ZF	All	250 c.i.d. 2V	1	XY	9A702	A
XA/B, ZF/G	All	302 c.i.d. – to 12/73	1	XA	9A702	A
XA/B, ZF/G	All	351 c.i.d.	1	XA	9A702	B
XA/B, ZF/G	All	Pin – 1/16" dia. x ½" – rod assy. to shaft	1	72003 S7/8		
XA/B, ZF/G	All	8 cyl. – grommet – rod assy. to shaft	1	379009 S		
– – 9C704 – – VACUUM HOSE						
XA, ZF	All	250 c.i.d. 2V	1	XW	9C704	A
XA/B, ZF/G	All	302 c.i.d. – not serviced (cut from C8AZ-17543-B)	1	C60A	9C704	A
XA/B, ZF/G	All	351 c.i.d. – not serviced (cut from C8AZ-17543-B)	1	73DA	9C704	AA
– – 9A705 – – COVER – THERMOSTAT CHOKE HEATER						
XA/B, ZF/G	All	302/351 c.i.d. 2V	1	XA	9A705	A
XA/B, ZF/G	All	351 c.i.d. 4V	1	XA	9A705	BA
– – 9A714 – – INSERT – THERMOSTATIC CHOKE CONTROL INTAKE						
XA/B, ZF/G	All	8 cyl. – to 12/73	1	C20Z	9A714	A
– – 9C721 – – CLAMP – THERMOSTAT HEATER						
XA, ZF	All	250 c.i.d. 2V	1	XA	9C721	A
– – 9A722 – – GROMMET – CARBURETTOR LEVER						
XA/B, ZF/G	All	6 cyl. 1V	1	XY	9A722	AA
– – 9K723 – – BRACKET ASSY. – CARB. CONTROL SHAFT SUPPORT						
XA/B, ZF/G	All	6 cyl. 1V	1	XY	9K723	A
– – 9B724 – – BRACKET ASSY. – CARBY. CONTROL SHAFT SUPPORT & KICKDOWN						
XA/B, ZF/G	All	200/250 c.i.d. – Borg Warner auto. trans. – to 12/73	1	XA	9B724	AA
XB, ZG	All	200/250 c.i.d. – Borg Warner auto. trans. – from 1/74	1	XB	9B724	A

MODEL	BODY TYPE	REMARKS	UNIT	PART NUMBER		
– – 9725 – – SHAFT ASSY. – ACCELERATOR						
XA/B, ZF/G	All	6 cyl. 1V – man. trans	1	XA	9725	AA
XA/B, ZF/G	All	6 cyl. 1V – auto trans. – to 1/75	1	XA	9725	AA
XB, ZG	All	6 cyl. 1V – auto trans. – from 1/75	1	XB	9725	A*
XA/B, ZF/G	All	250 c.i.d. 1V – C4 auto trans.	1	XA	9725	FA
XA	All	250 c.i.d. 2V – man trans.	1	XA	9725	DA
XA	All	250 c.i.d. 2V – auto trans.	1	XA	9725	EA
XA/B, ZF/G	All	302 c.i.d. auto trans. – to 12/73	1	XA	9725	BC
XA/B, ZF/G	All	302 c.i.d. – man. trans. – to 12/73	1	XA	9725	CA
XB,ZG	All	302 c.i.d. – from 12/73	1	PL	9725	A
XA,ZF	All	351 c.i.d. – auto trans.	1	XA	9725	GA
XA,ZF	All	351 c.i.d. – man. trans.	1	XA	9725	CA
XB,ZG	All	351 c.i.d.	1	PL	9725	A
– – 9L725 – – SHIELD – ACCELERATOR CROSS SHAFT						
XB,ZG	All	8 cyl. – from 12/73 to 10/74	1	PL	9L725	A
XB,ZG	All	8 cyl. – from 10/74	1	XB	9L725	A*
– – 9E727 – – THERMOSTATIC CHOKE HEATER						
XA,ZF	All	250 c.i.d. 2V	1	XY	9E727	AA
XA/B, ZF/G	All	302, 351 c.i.d. – from 1/74	1	XA	9E727	A
– – 9728 – – BRACKET – ACCELERATOR SHAFT						
XA/B, ZF/G	All	(2) ¼" dia. holes on 1-3/8" centres – (1) 9/16" dia. hole on centre line	1	ARC6DA	9728	C
XA/B, ZF/G	All	(2) ¼" dia. holes on 1" centres – (1) 9/16" dia. hole offset from centre line	1	ARC6DA	9728	B
XB,ZG	All	302 c.i.d. – from 1/75	1	XB	9728	A
– – 9A728 – – BUSH – ACCELERATOR SHAFT						
XA/B, ZF/G	All		a/r	XW	9A728	AA
– – 9A734 – – LEVER ASSY. – ACCELERATOR SHAFT TO PEDAL						
XA/B, ZF/G	All	250 1V – C4 auto trans.	1	XA	9A734	AA
XA/B, ZF/G	All	8 cyl. & 250 c.i.d. 2V	1	XA	9A734	B
XA/B, ZF/G	All	Nut – 5/16" – 12 – lever assy. to shaft assy.	a/r	33798 S78		
– – 9735 – – PAD & INSERT – ACCELERATOR PEDAL						
XA/B, ZF/G	All		1	C80Z	9735	B
– – 9737 – – SPRING – ACCELERATOR SHAFT RETRACTING						
XA/B, ZF/G	All	6 cyl. 1V – 2¾" long x ¾" dia. – to 1/75	1	XW	9737	A
XB,ZG	All	6 cyl. 1V – man. trans. – 2¾" long x ¾" dia. – from 1/75	1	XW	9737	A
XB, ZG	All	6 cyl. 1V – auto trans. – from 1/75	1	XB	9737	A*
XA/B, ZF/G	All	250, 351 c.i.d. 2V – 3" long x 5/8" dia.	1	XW	9737	C
XA/B, ZF/G	All	302 c.i.d. – 2-1/8" long x 5/8" dia. – to 12/73	1	C80Z	9737	C
XB,ZG	All	302 c.i.d. – 2-5/8" long x ½" dia. – from 12/73 to 5/74	1	69AB	9B569	AA
XB,ZG	All	302, 351 c.i.d. 2V – from 5/74	1	XB	7K567	A
XA	All	351 c.i.d. 4V – 4-1/8" long x 5/8" dia.	1	XW	9737	B
XB	All	351 c.i.d. 4V – 4½" long x ½" dia.	1	PL	9737	A
XA/B, ZF/G	All	Park brake cable positioning – with rear drum brakes – 2½" long x 5/8" dia.	1	C80Z	9737	C
XB,ZG	All	Park brake cable positioning – with rear disc brakes – 4-1/8" long x 5/8" dia.	1	XW	9737	B
– – 9741 – – BRACKET – ACCELERATOR TO RETRACTING SPRING						
XA/B, ZF/G	All	302 c.i.d. to 12/73	1	XA	9741	A
XA/B, ZF/G	All	351 c.i.d. 2V	1	XW	9741	D
XA/B	All	351 c.i.d. 4V – to 10/74	1	XW	9741	E
XB	All	351 c.i.d. 4V – from 10/74	1	XB	9741	A*
XA/B	All	Handling option	1	XW	9741	G
– – 9P749 – – SHAFT AND LEVER ASSY. – ACCELERATOR						
XB,ZG	All	6 cyl. – B/w auto trans. – from 7/74	1	XB	9P749	A*
– – 9760 – – SPRING – ACCELERATOR SHAFT TO PEDAL						
XA/B, ZF/G	All		1	XW	9760	A
– – 9772 – – ROD ASSY. – ACCEL. BELLCRANK TO CARBY.						
XA/B, ZF/G	All	6 cyl.	1	XT	9772	A
– – 9C786 – – ADAPTOR – THERMOSTATIC CHOKE CONTROL INLET TUBE						
XA/B, ZF/G	All	302 c.i.d. to 12/73	1	XA	9C786	A
XA,ZF	All	351 c.i.d. 4V to 7/73	1	XA	9C786	A

MODEL	BODY TYPE	REMARKS	UNIT	PART NUMBER		
– – 9C786 – – CONNECTOR – WATER HEATER & INTAKE MANIFOLD						
XA,ZF	All	250 c.i.d. 2V	1	XA	9C786	AA
XB,ZG	All	200/250 c.i.d.	1	CJ	9C786	AA
– – 9793 – – SEAL – ACCELERATOR SHAFT						
XA/B, ZF/G	All	6 cyl. – man. trans. & B/w auto trans. – to 3/74	1	XA	9793	A
XB,ZG	All	6 cyl. – man. trans. & B/w auto trans. – from 3/74	1	XB	9793	A
XA/B, ZF/G	All	6 cyl. – C4 auto trans.	1	XY	9793	AA
XA/B, ZF/G	All	8 cyl.	1	XY	9793	AA
– – 9C799 – – CABLE ASSY. – THROTTLE CONTROL						
XB,ZG	All	8 cyl. – to 12/74	1	PL	9C799	A
XB,ZG	All	8 cyl. – from 12/74	1	XB	9C799	A*
XB,ZG	All	Screw – cable to dash	1	E 602526 S36		
– – 9E817 – – BRACKET – FUEL VAPOUR STORAGE CANNISTER						
XB,ZG	All	8 cyl. – from 12/74	1	XB	9E817	A*
– – 9819 – – TUBE – THERMOSTATIC CHOKE CONTROL OUTLET						
XA,ZF	All	250 c.i.d. 2V	1	XA	9819	D
XA/B, ZF/G	All	302 c.i.d. – to 12/73	1	XA	9819	A
XB,ZG	All	302 c.i.d. from 12/73 to 1/75	1	XB	9819	A
XA,ZF	All	351 c.i.d.	1	XA	9819	BA
XB,ZG	All exc. 54H, 65H	351 c.i.d. – to 1/75	1	XA	9819	BB
XB	54H, 65H	351 c.i.d. – to 6/74	1	XA	9819	BB
XB	54H, 65H	351 c.i.d. – from 6/74 to 1/75	1	XB	9819	B
XB,ZG	All	302/351 c.i.d. – from 1/75	1	XB	9819	A
– – 9820 – – TUBE – THERMOSTATIC CHOKE CONTROL INLET						
XA,ZF	All	250 c.i.d. 2V	1	XY	9820	A
XA/B, ZF/G	All	302 c.i.d. – to 12/73	1	XA	9820	A
XB,ZG	All	302 c.i.d. – from 12/73	1	XA	9820	BB
XA,ZF	All	351 c.i.d.	1	XA	9820	BA
XB,ZG	All	351 c.i.d.	1	XA	9820	BB
– – 9825/6 – – CLIP – ROD END CLEVIS						
XA,ZF	All	6 cyl. 1V	1	XW	9825	C
XA/B, ZF/G	All	Auto trans.	1	B7A	9825	B
XA,ZF	All	With XA 9510 JA/KA	1	CM 1695		
– – 9A825 – – BALL JOINT ASSY.						
XA,ZF	All	8 cyl	1	XW	9A825	A
XB,ZG	All	302 c.i.d. – to 12/73	1	XW	9A825	A
– – 9A846 – – TRUNNION – ACCELERATOR SHAFT TO BELLCRANK ROD						
XA,ZF	All	8 cyl.	1	C5ZZ	9A846	A
XB,ZG	All	302 c.i.d. – to 12/73	1	C5ZZ	9A846	A
– – 9865 – – INSULATOR – THERMOSTAT CHOKE CONTROL						
XA,ZF	All	250 c.i.d. 2V	1	C8WZ	9865	B
XB,ZG	All	302/351 c.i.d. – from 12/73 – cut to suit	1	C8WZ	9865	B
XA/B, ZF/G	All	302 c.i.d. – 351 c.i.d. 4V – to 12/73	1	72DA	9865	AA
XA/B, ZF/G	All	351 c.i.d. 2V – to 12/73	1	C1AE	9865	A
– – 9C869 – – TUBE ASSY. – THERMOSTAT CHOKE HEATER						
XA/B, ZF/G	All	351 c.i.d. 2V – to 12/73	1	D0AZ	9C869	B
XA/B	54H, 65H	To 12/73	1	D0AZ	9C869	A
– – 9873 – – PIN – ACCELERATOR PEDAL						
XA/B, ZF/G	All		1	C80Z	9873	A
– – 9919 – – SHAFT ASSY. – CARBURETTOR THROTTLE OPERATING						
XA/B, ZF/G	All	6 cyl. 1V – man. & C4 auto trans.	1	XW	9919	A
XA/B, ZF/G	All	6 cyl. 1V – B/w auto trans.	1	XW	9919	B

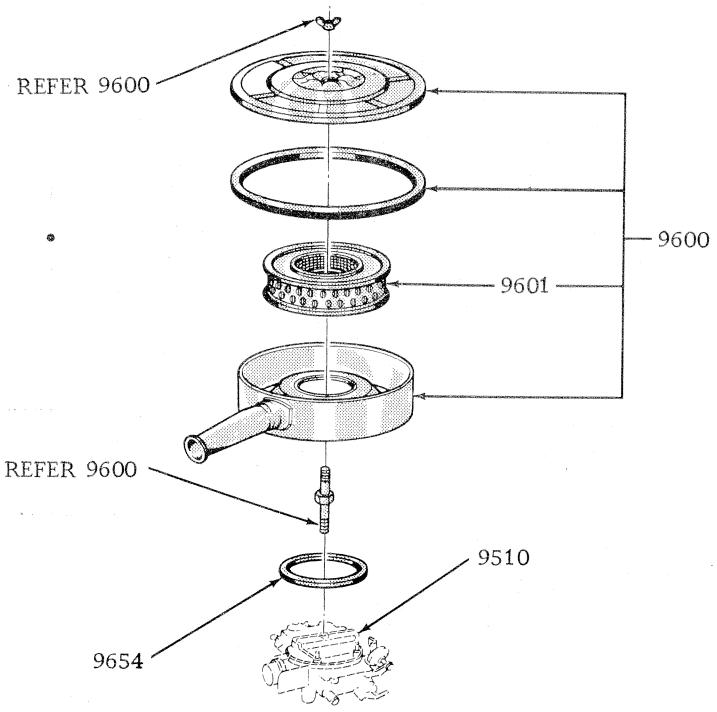

TYPICAL AIR CLEANER ASSEMBLY

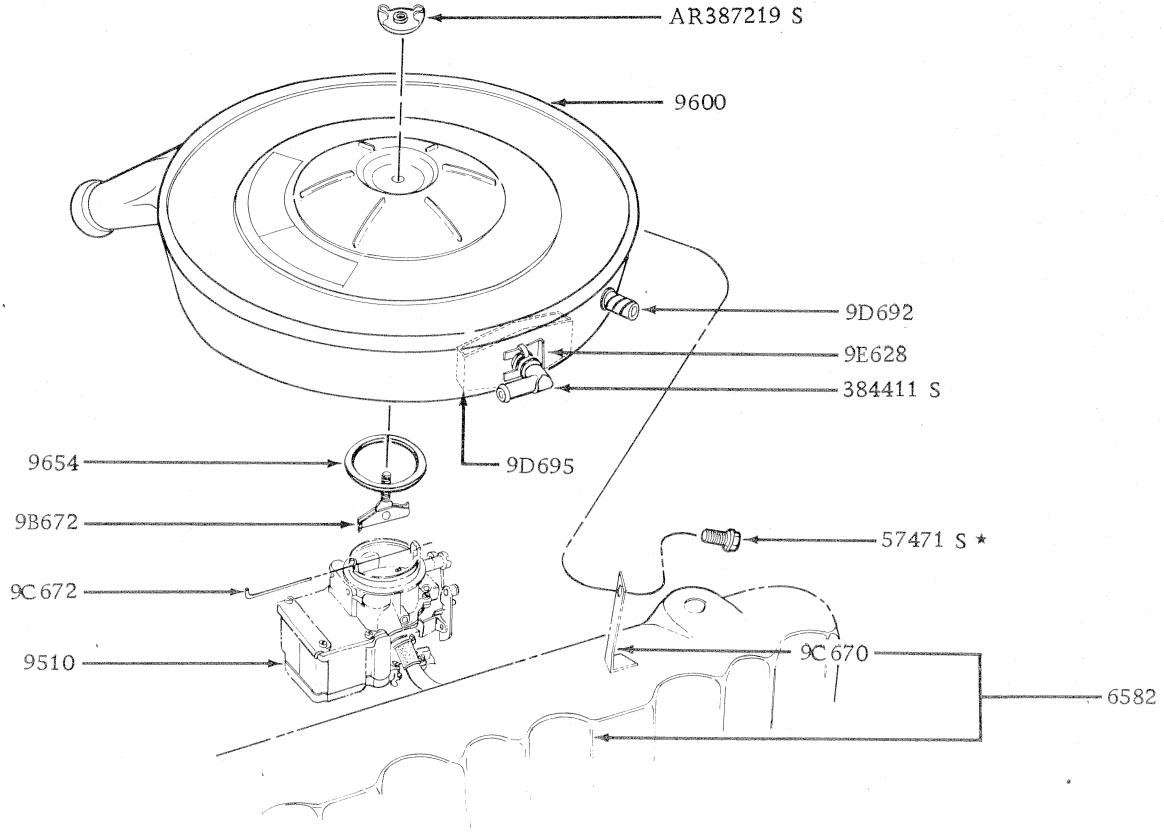

TYPICAL AIR CLEANER INSTALLATION – 6 CYLINDER

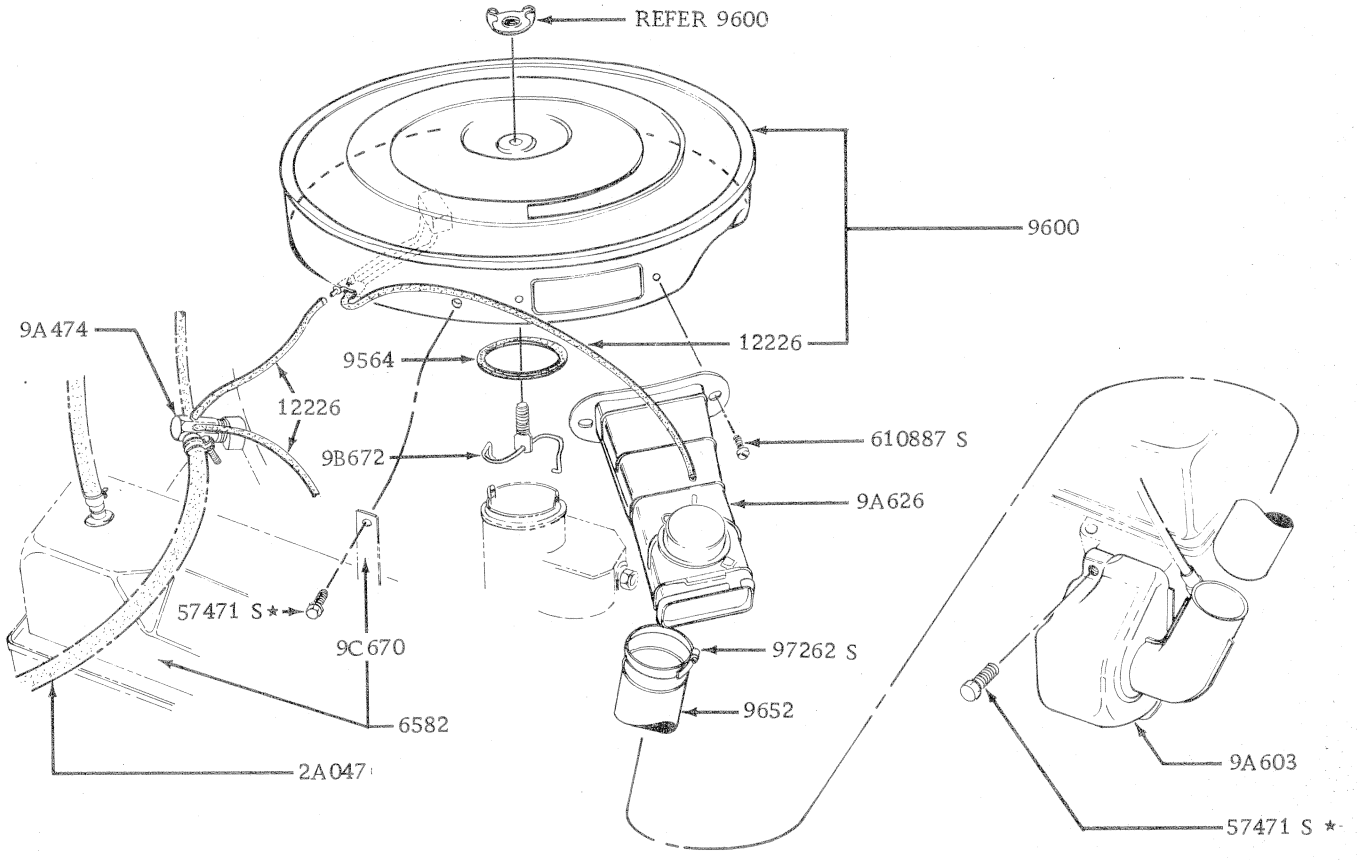

TYPICAL AIR CLEANER INSTALLATION -- 8 CYLINDER

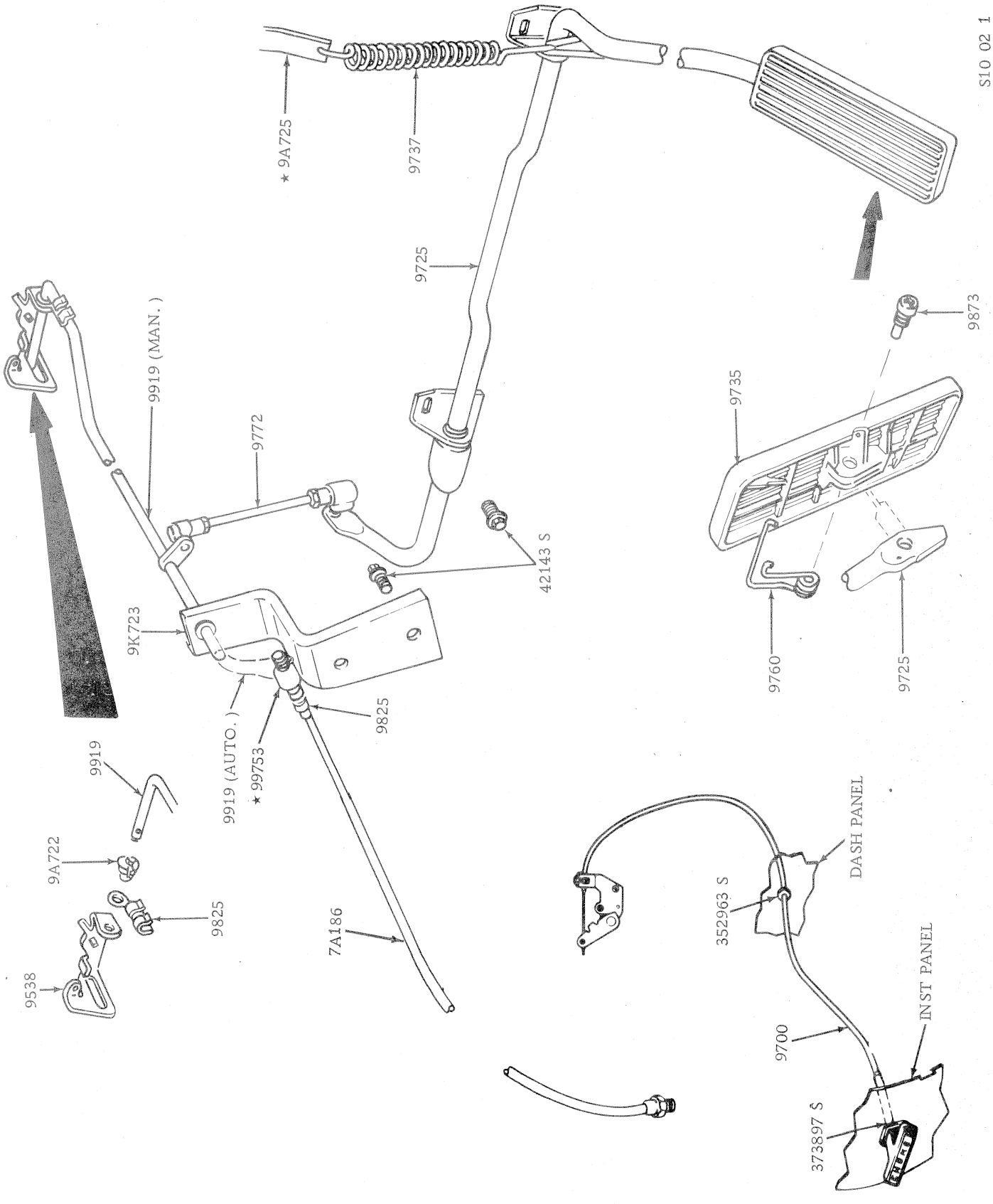

ACCELERATOR LINKAGE – 6 CYL MANUAL & B/WARNER AUTO TRANS

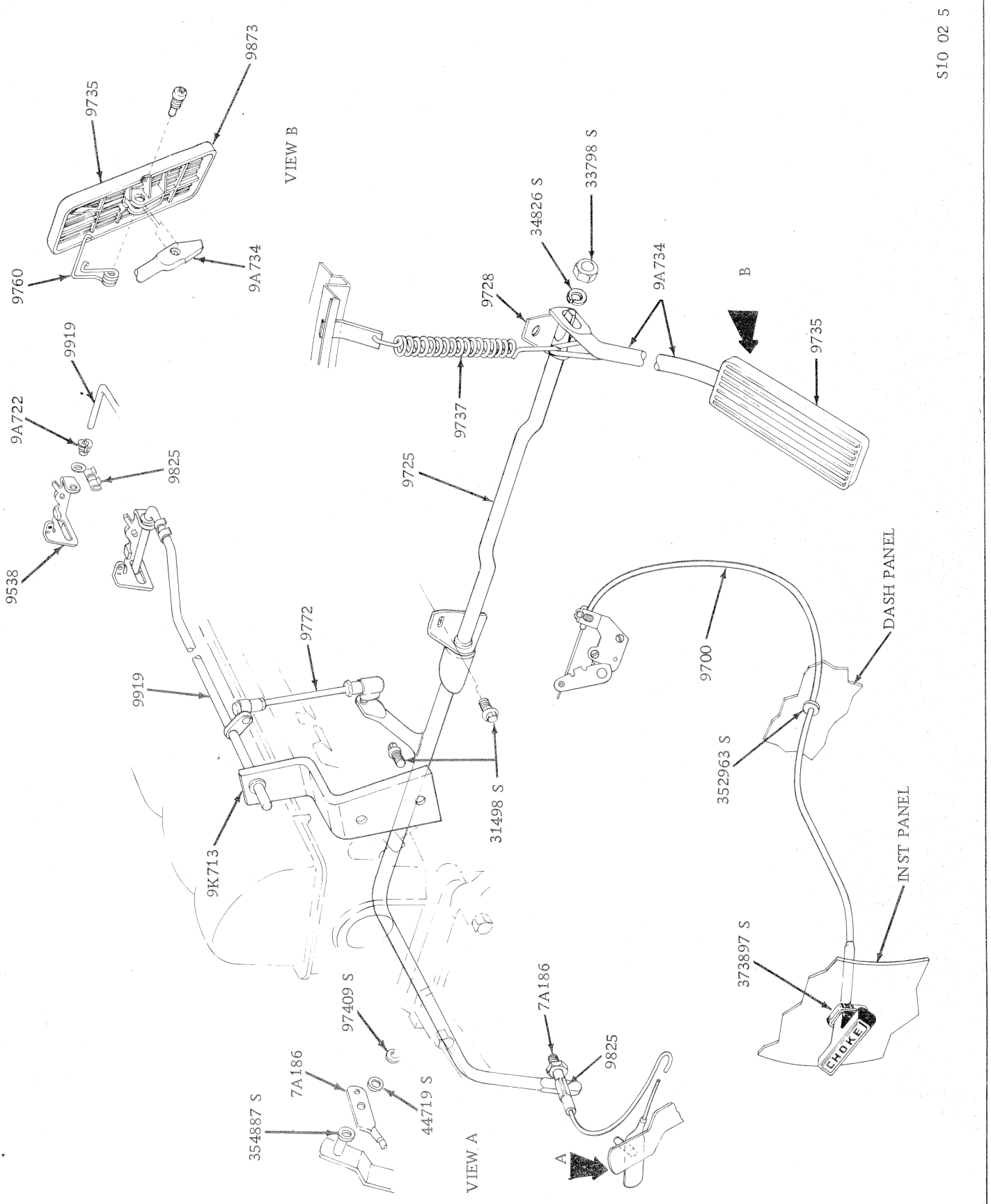

ACCELERATOR LINKAGE 250 1V C4 AUTO TRANS

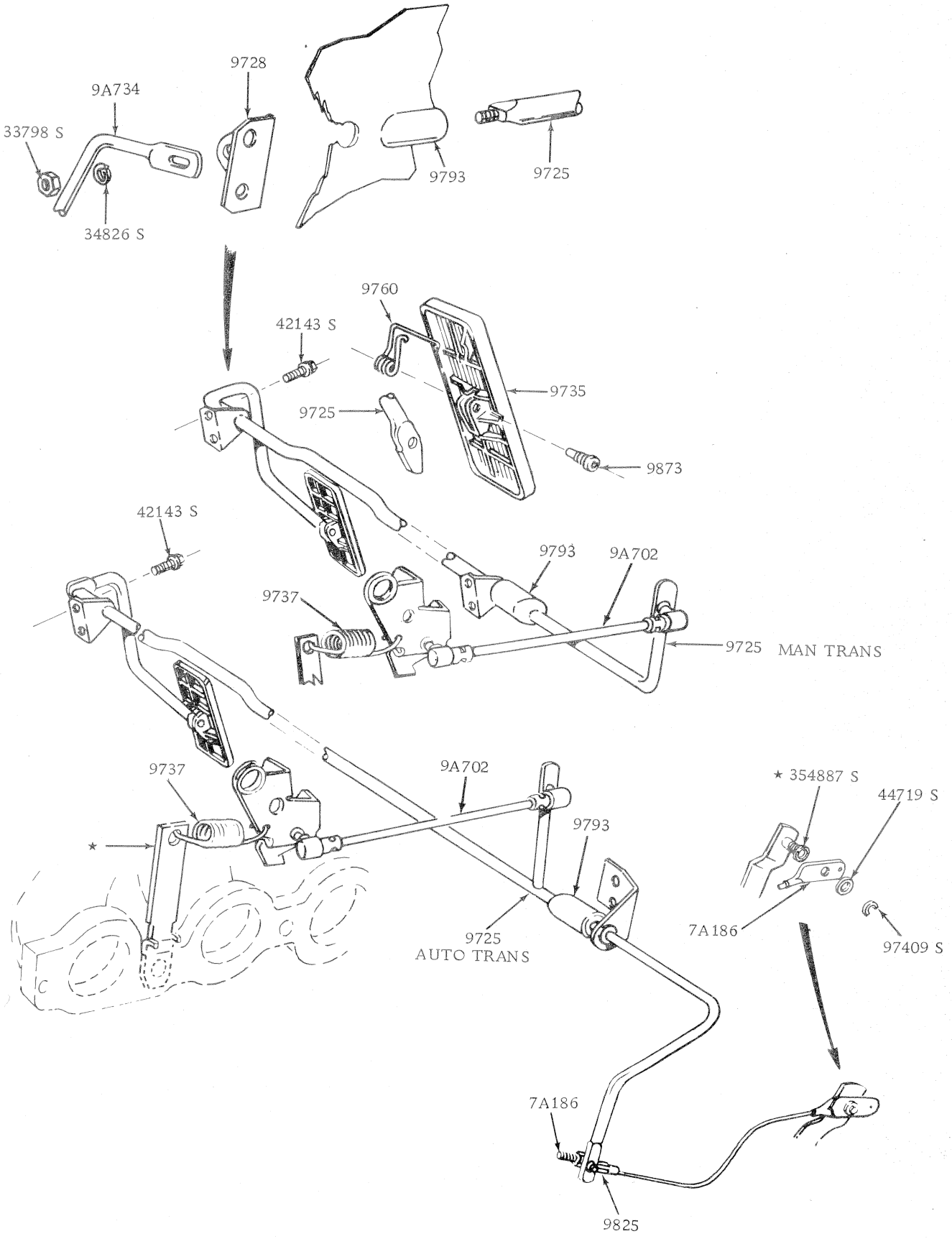

S10 02 2

ACCELERATOR LINKAGE - 250 CID 2V

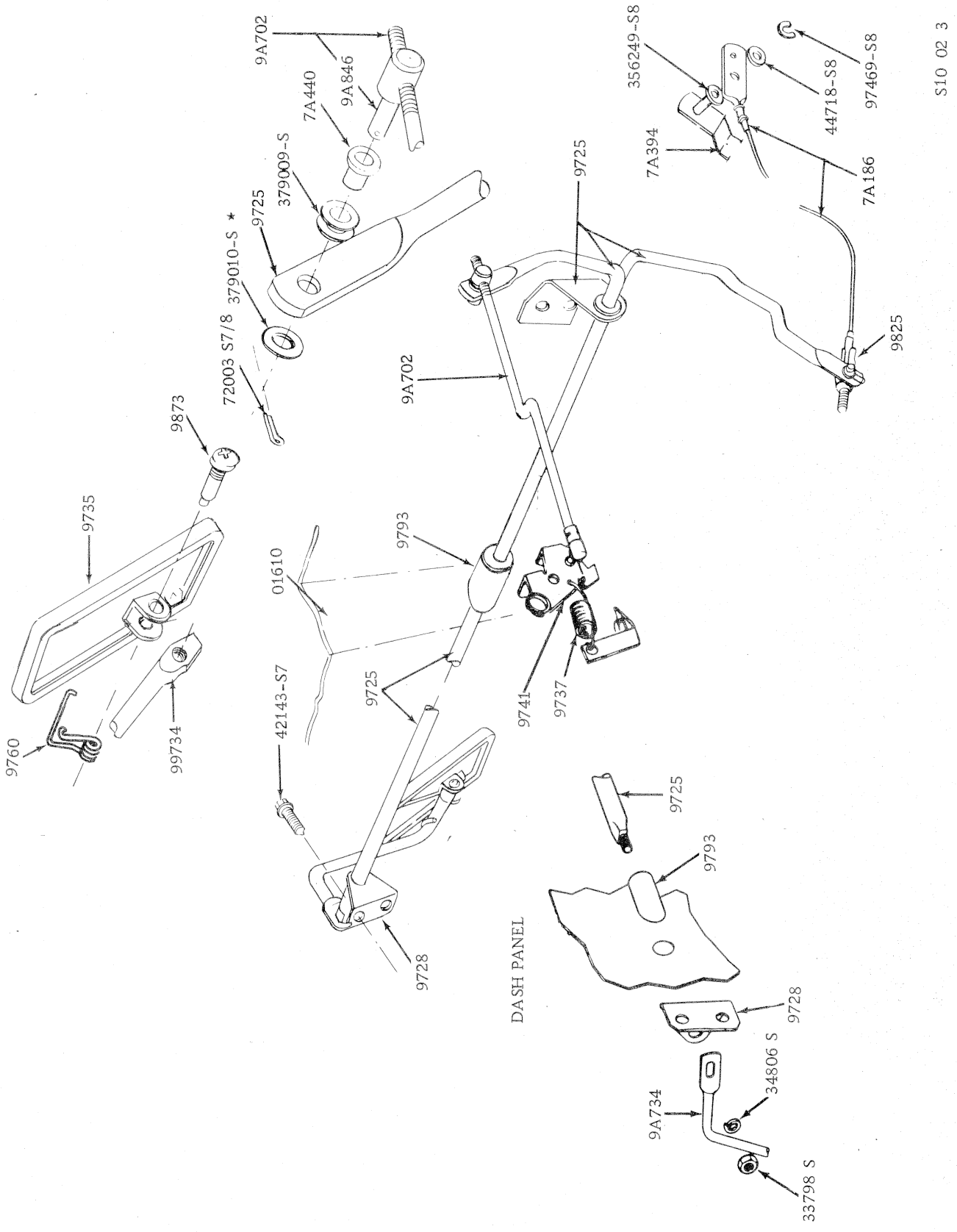

ACCELERATOR LINKAGE 302 CID

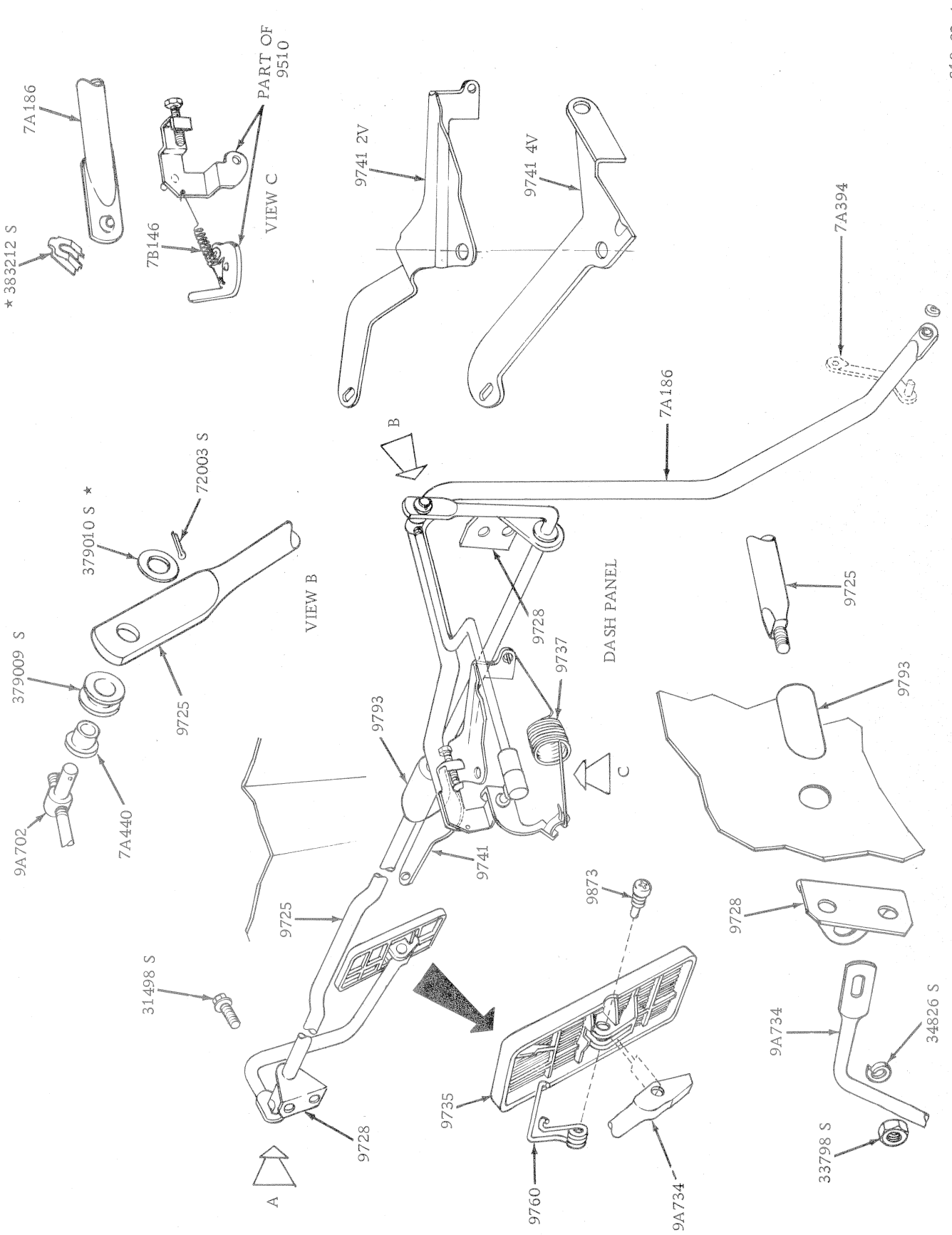

ACCELERATOR LINKAGE 351 CID

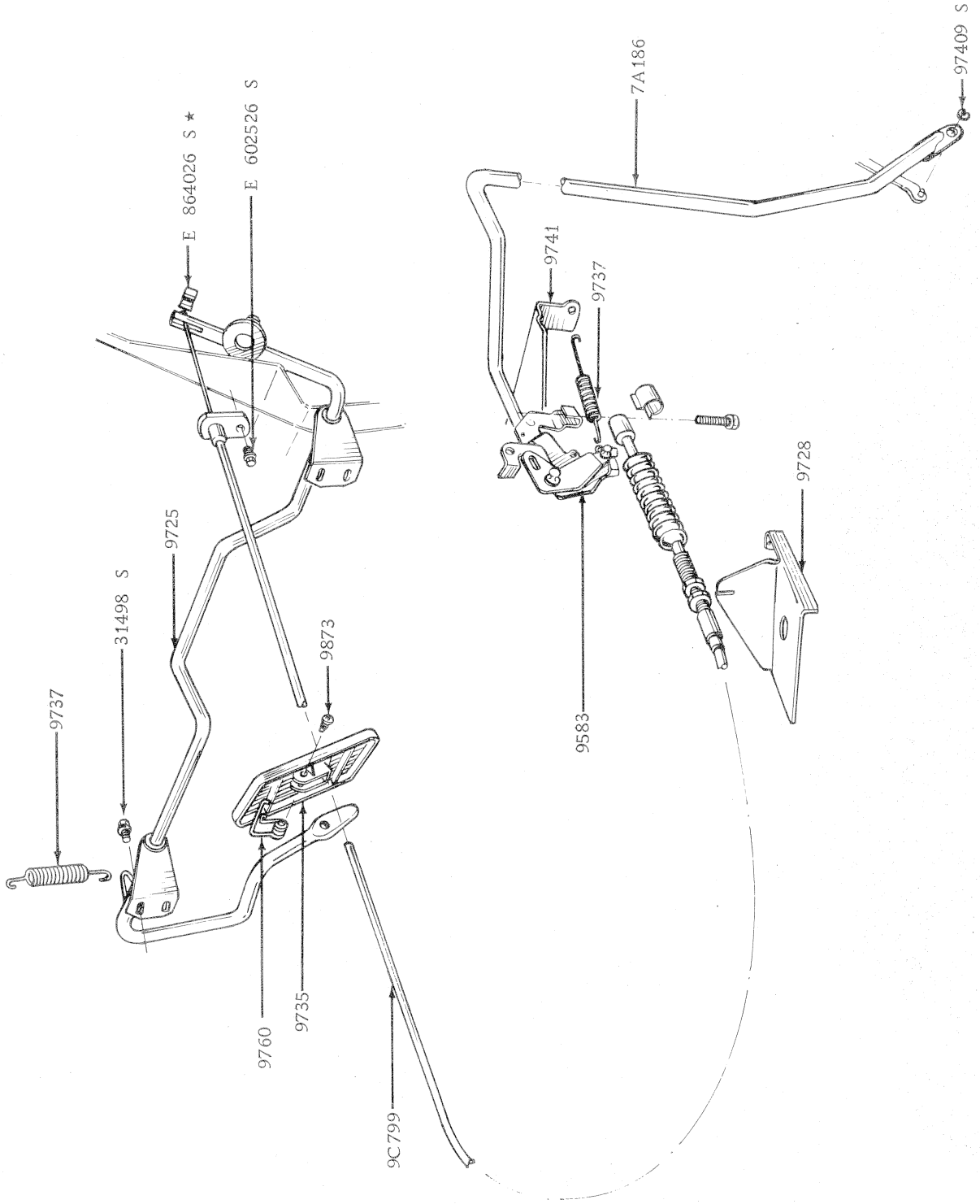

ACCELERATOR LINKAGE - CABLE OPERATED

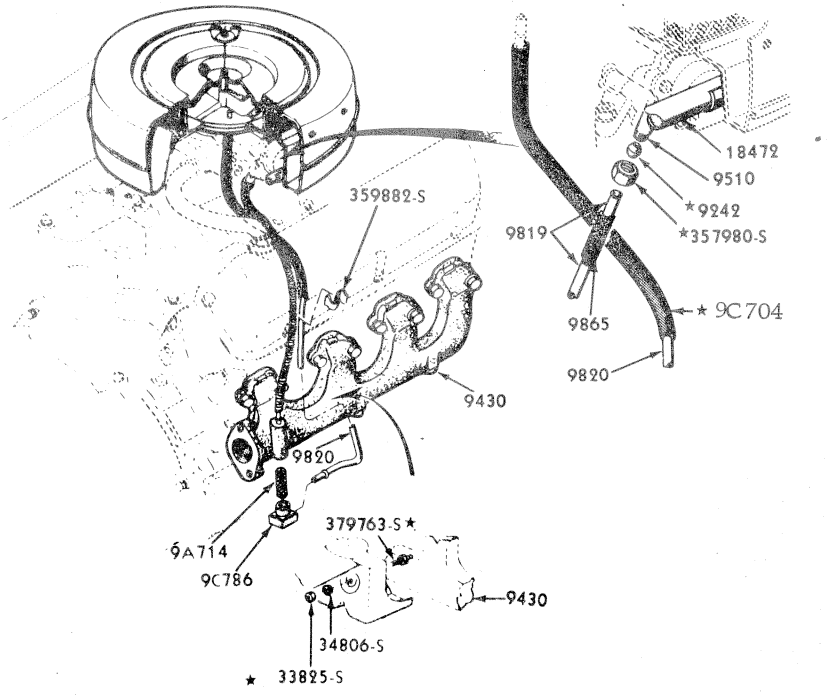

THERMOSTATIC CHOKE CONTROL TUBE AND RELATED PARTS 8 CYL.

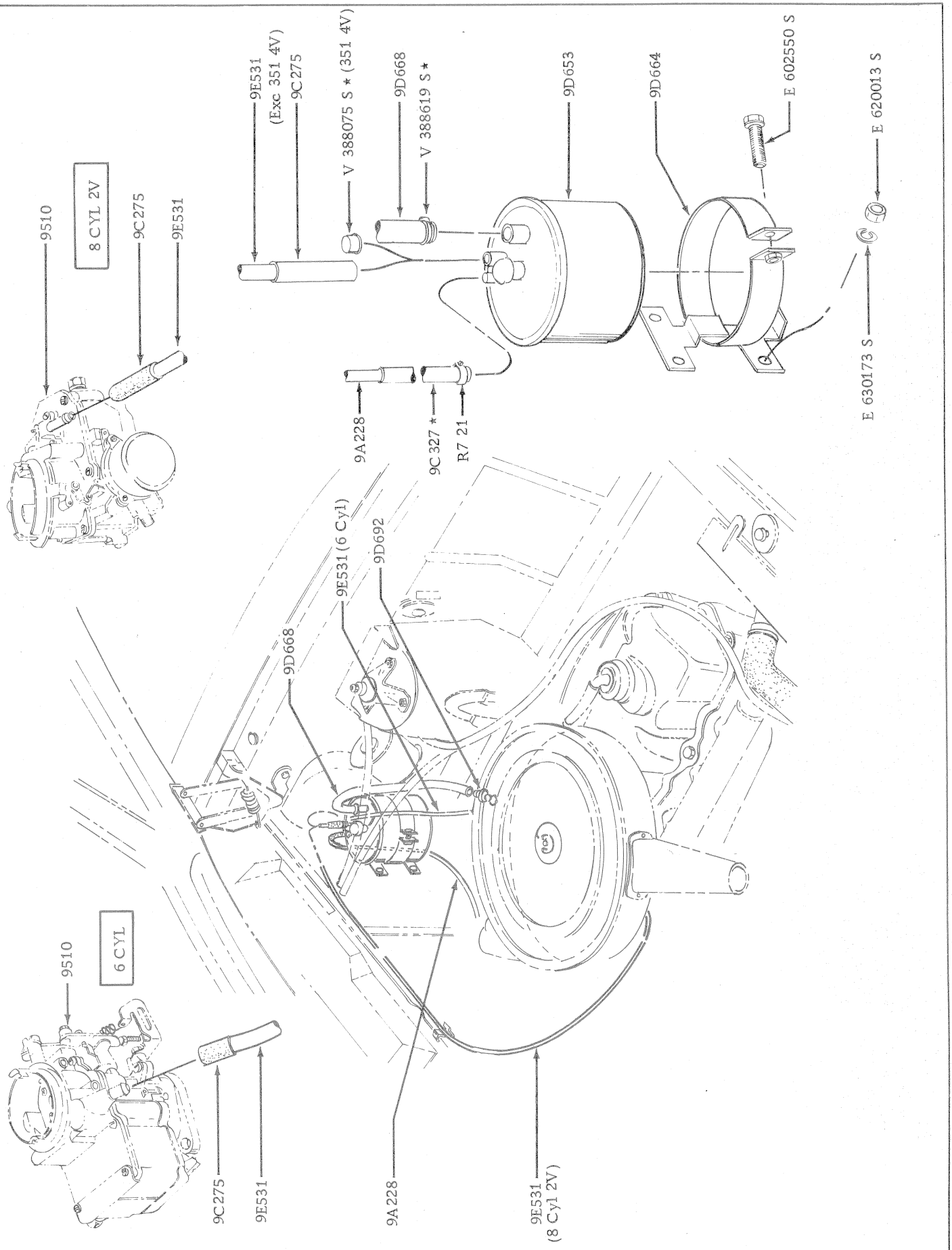

TYPICAL CARBON CANNISTER AND EMISSION HOSE INSTALLATION

HOW TO IDENTIFY ALTERNATOR PARTS

1. Locate the identification tag or plate on the alternator housing. If the housing is replaced, transfer the tag so that identification will not be lost.

2. Refer to the alternator and pulley assembly application chart to find the parts list for the model.

   Example: An XB Falcon 500 utility, built after 12/73, with 351 c.i.d. 2V engine and air conditioning, fitted with a Bosch 55 amp alternator identified 72DA/LA, uses parts list 'L'.

   Turn to the parts list and select the component part required. Small parts kits are shown at the beginning of the parts list.

NOTE:— 40 Amp. Alternator fitted to:— All Without Air Conditioning, Heated Backlite and Police/Taxi Kit.
55 Amp. Alternator fitted to:— All With Air Conditioning.
OR
All with Heated Backlite.
OR
All With Police/Taxi Kit.
OR
Any combination of the above options.

ALTERNATOR AND PULLEY ASSEMBLY APPLICATION CHART

MODEL/YEAR RANGE	BODY TYPE	ENGINE	AMP.	MAKE	IDENTIFICATION	PART NUMBER	REPLACED BY	PARTS LIST
XA, ZF —To 6/72	All	6 cyl.	40	Bosch	ARD2DF/AA	XA 10300 AA	XAB 10300 A	H
XA/B,ZF/G —From 6/72 To 12/73	All	6 cyl.	40	Bosch	72DA/AA	XAB 10300 A	Components ▲	I
XB, ZG —From 12/73	All	6 cyl.	40	Bosch	72DA/AC	72DA 10300 AC	Components ▲	N
XA, ZF —To 6/72	All	6 cyl.	55	Lucas	ARC2DF/EA	XA 10300 EA	XAL 10300 E	A
XA/B,ZF/G —From 6/72 To 12/73	All	6 cyl.	55	Lucas	72DA/EA	XAL 10300 E ϕ		D
XB, ZG —From 12/73	All	6 cyl.	55	Bosch	72DA/JA	72DA 10300 JA ■	Components ▲	J
XB, ZG —From 12/73	All	6 cyl.	55	Bosch	72DA/KA	72DA 10300 KA *	Components ▲	K
XA, ZF —To 6/72	All	8 cyl.	40	Lucas	ARC2DF/BA/CA	XA 10300 BA	XAL 10300 B	B
XA/B,ZF/G—From 6/72 To 12/73	All	8 cyl.	40	Lucas	72DA/BA/CA	XAL 10300 B		E
XB, ZG — From 12/73	All	8 cyl.	40	Bosch	72DA/HA	72DA 10300 HA	Components ▲	M
XA, ZF — To 6/72	All	8 cyl.	55	Lucas	ARC2DF/DA/GA	XA 10300 DA	XAL 10300 D	C
XA/B,ZF/G—From 6/72 To 12/73	All	8 cyl.	55	Lucas	72DA/DA	XAL 10300 D		F
XB, ZG — From 12/73	All	8 cyl.	55	Bosch	72DA/LA	72DA 10300 LA	Components ▲	L
XA/B — GT HO	54H, 65H	8 cyl.	55	Motorcraft	D0AF/A	GL 88 ●	GL 88 A	G

▲ Components of 10300 Alternator and Pulley Assembly:— (1) 10346 Alternator Assembly, (1) 10A310 Fan, (1) 10344 Pulley, (1) Pulley Retaining Nut & (1) Pulley Retaining Washer.

ϕ With Double Sheave Pulley — Use for assembly replacement of alternator with single sheave pulley.

■ Single Sheave Pulley — Without Air Conditioning.

* Double Sheave Pulley — With Air Conditioning.

● Less Fan and Pulley.

ALTERNATOR AND PULLEY ASSEMBLIES

ENGINE	AMP.	MAKE	IDENTIFICATION	PART NUMBER	REPLACED BY	PARTS LIST
6 cyl.	55	Lucas	ARC2DF/EA	XA 10300 EA	XAL 10300 E	A
8 cyl.	40	Lucas	ARC2DF/BA/CA	XA 10300 BA	XAL 10300 B	B
8 cyl.	55	Lucas	ARC2DF/DA/GA	XA 10300 DA	XAL 10300 D	C
6 cyl.	55	Lucas	72DA/EA	XAL 10300 E ϕ		D
8 cyl.	40	Lucas	72DA/BA/CA	XAL 10300 B		E
8 cyl.	55	Lucas	72DA/DA	XAL 10300 D		F
8 cyl.	55	Motorcraft	D0AF/A	GL 88 ●	GL 88 A	G
6 cyl.	40	Bosch	ARD2DF/AA	XA 10300 AA	XAB 10300 A	H
6 cyl.	40	Bosch	72DA/AA	XAB 10300 A	Components ▲	I
6 cyl.	55	Bosch	72DA/JA	72DA 10300 JA ■	Components ▲	J
6 cyl.	55	Bosch	72DA/KA	72DA 10300 KA *	Components ▲	K
8 cyl.	55	Bosch	72DA/LA	72DA 10300 LA	Components ▲	L
8 cyl.	40	Bosch	72DA/HA	72DA 10300 HA	Components ▲	M
6 cyl.	40	Bosch	72DA/AC	72DA 10300 AC	Components ▲	N
8 cyl.	55	Motorcraft	D20F/HA	GL 88 A ●		O

▲ Components of 10300 Alternator and Pulley Assembly:— (1) 10346 Alternator Assembly, (1) 10A310 Fan, (1) 10344 Pulley, (1) Pulley Retaining Nut & (1) Pulley Retaining Washer.

ϕ With Double Sheave Pulley — Use for assembly replacement of alternator with single sheave pulley.

■ Single Sheave Pulley — Without Air Conditioning.

* Double Sheave Pulley — With Air Conditioning.

● Less Fan and Pulley.

DESCRIPTION	PART NUMBER	ALTERNATOR PARTS LIST "A TO L"											
		A	B	C	D	E	F	G	H	I	J	K	L
SUNDRY PARTS SET	**10B301**												
	XAL 10B301 A	A	B	C									
	XAL 10B301 B				D	E	F						
	GY 900							G					
KIT – ROTOR PARTS SET	**10A333**												
	XAB 10A333 A								H	I	J	K	L
BEARING – DRIVE END	**10094**												
	XAB 10094 A	A	B	C	D	E	F		H	I	J	K	L
	GE 16							G					
OIL CUP (REFER SECTION 120)	**10141**												
KIT – RECTIFIER	**10304**												
	GY 959							G					
BEARING – SLIP RING END	**10A304**												
	XAL 10A304 A	A	B	C	D	E	F						
	GE 13							G					
	XAB 10A304 A								H	I	J	K	L
FAN	**10A310**												
	XAL 10A310 B	A	B	C	D	E	F						
O.N.R.	GP 473 A							G					
	XAB 10A310 A								H	I	J	K	L
REGULATOR ASSY. – ALTERNATOR	**10316**												
	XAL 10316 B	A											
	XAL 10316 A		B	C	D	E	F						
	GR 341 A							G					
	XAB 10316 AA									I	J	K	L
BRUSH BOX MOULDING	**10320**												
	CH 10320 A				D	E	F						
SCREW – PLATE RETAINING	**10A323**												
	CH 10A323 A				D	E	F						
SLIP RING – ROTOR	**10328**												
	XAL 10328 A	A	B	C	D	E	F						
	XAB 10328 A								H	I			
Not serviced	XAB 10328 B										J	K	L
INSULATOR – TERMINAL	**10329**												
	GY 911							G					
White	GY 912							G					
Battery	GY 816							2					
HEAD – DRIVE END	**10333**												
	XAL 10333 A	A	B	C	D	E	F						
	GD 309							G					
	XAB 10333 A								H	I	J	K	L
SUPPORT WASHER	**10B333**												
	CH 10B333 B				D	E	F						
HEAD – SLIP RING END	**10334**												
	XAL 10334 A	A	B	C									
	XAL 10334 C				D								
	XAL 10334 E					E	F						
	GH 307							G					
	XAB 10334 A								H				
	XAB 10334 B									I	J	K	L
Bolt – hex. hd – No. 10 – 24 x 2-1/8"	378466 S100							3					

DESCRIPTION	PART NUMBER	ALTERNATOR PARTS LIST "A TO L"											
		A	B	C	D	E	F	G	H	I	J	K	L
ROTOR – COMPLETE	**10335**												
	GM 335							G					
	XAB 10335 A								H	I			
	XAB 10335 B										J	K	L
PLATE – BEARING RETAINER	**10A335**												
	XAL 10A335 A	A	B	C	D	E	F						
STATOR & COIL ASSY.	**10336**												
	GC 299							G					
BRUSH & SPRING SET (REFER 10347)	**10A341**												
BRUSH & SPRING SET (REFER 10347)	**10B341**												
PULLEY – BELT	**10344**												
Double sheave – 2.75" dia. colour code grey	XAL 10344 BA	A											
Single sheave – 2.75" dia. colour code red	XAL 10344 A		B			E							
Double sheave – 2.75" dia. colour code black	XAL 10344 F			C									
Single sheave – 3.25" dia. colour code white	XAL 10344 D			C	D								
Single sheave – 3.25" dia. colour code green	XAL 10344 C						F						
Single sheave 2.75" dia. colour code nil.	XAL 10344 G						F						
Single sheave 3.88" dia. colour code yellow	XAL 10344 E							G					
Single sheave – 2.68" dia. colour code nil.	XAB 10344 A								H	I	J		
Double sheave – 2.75" dia. colour code grey	XAB 10344 C											K	
Single sheave – 3.25" dia. colour code white	XAB 10344 B												L
Lockwasher pulley retaining	351496 S									I	J	K	L
Nut – pulley retaining	351124 S									I	J	K	L
COLLAR – DRIVE END	**10A344**												
	XAL 10A344 A	A	B	C	D	E	F						
ALTERNATOR ASSY. – LESS PULLEY	**10346**												
	XAB 10346 A									I			
	XA 10346 B										J	K	L
BRUSH & SPRING SET	**10347**												
	XAL 10347 A	A	B	C	D								
	CH 10B341 A					E	F						
	GB 111							G					
STATOR – WOUND	XAB 10347 A								H	I	J	K	L
	10A347												
	XAL 10A347 A	A		C	D		F						
	XAL 10A347 B		B			E							
	XAB 10A347 A								H	I			
	XAB 10A347 B										J	K	L
SPRING – BRUSH	**10349**												
	GY 913							2					
	XAB 10349 A								2	2	2	2	2
BRUSH – HOLDER	**10351**												
	XAL 10351 A	A		C									
	XAL 10351 D		B			E	F						
	XAL 10351 C				D								
	GY 1011							G					
	XAB 10351 A								H	I	J	K	L
ROTOR	**10355**												
	XAL 10355 A	A		C	D		F						
	XAL 10355 B		B			E							

DESCRIPTION	PART NUMBER	ALTERNATOR PART LIST "A TO L"											
		A	B	C	D	E	F	G	H	I	J	K	L
RETAINER – FRONT BEARING	**10A355**												
O.N.R.	GY 693							G					
SNAP RING – ROTOR STOP	**10370**												
	XAL 10370 A	A	B	C	D	E	F						
O.N.R.	C3XZ 10370							G					
DIODE – POSITIVE	**10374**												
	XAL 10374 A	A		C									
	XAL 10374 B		B			E							
	XAL 10374 C				D		F						
	GY 702							3					
RECTIFIER ASSY.	**10376**												
	XAB 10376 A								H	I			
	XAB 10376 C										J	K	L
DIODE – NEGATIVE	**10378**												
	XAL 10378 A	A		C									
	XAL 10378 B		B			E							
	XAL 10378 C				D		F						
	GY 704							3					
INSULATOR – DIODE PLATE	**10A383**												
	XAL 10A383 A	A	B	C									
	XAL 10A383 C				D	E	F						
9/32" I.D. x 5/8" O.D. – O.N.R.	GY 816							G					
	GY 937							G					
BOLT – THROUGH FIXING	**10A396**												
	XAL 10A396 A	3		3	3		3						
	XAL 10A396 B		3			3					3	3	3
	378466 S100							3					
	XAB 10A396 A								4	4			

DESCRIPTION	PART NUMBER	ALTERNATOR PARTS LIST "M TO X"											
		M	N	O	P	Q	R	S	T	U	V	W	X
SUNDRY PARTS SET	10B301												
	GY 900			O									
KIT – ROTOR PARTS SET	10A333												
	XAB 10A333 A	M	N										
BEARING – DRIVE END	10094												
	XAB 10094 A	M	N										
	GE 16			O									
KIT – RECTIFIER	10304												
	GY 959			O									
BEARING – SLIP RING END	10A304												
	XAB 10A304 A	M	N										
	GE 13			O									
FAN	10A310												
	XAB 10A310 A	M	N										
O.N.R.	GP 473 A			O									
REGULATOR ASSY. – ALTERNATOR	10316												
	XAB 10316 AA	M	N										
	GR 341 A			O									
SLIP RING – ROTOR	10328												
	XAB 10328 A	M	N										
	C3SZ 10328 A			O									
INSULATOR – TERMINAL White	10329												
	GY 912			O									
HEAD – DRIVE END	10333												
	XAB 10333 A	M	N										
	GD 324 A			O									
HEAD – SLIP RING END	10334												
	XAB 10334 B	M	N										
	GH 307			O									
Bolt – hex. hd – No. 10 – 24 x 2-1/8"	378466 S100			3									
ROTOR – COMPLETE	10335												
	XAB 10335 A	M	N										
	GM 335			O									
STATOR & COIL ASSY.	10336												
	GC 309			O									
PULLEY – BELT	10344												
Single sheave – 3.25" dia. colour code white	XAB 10344 B	M											
Single sheave – 2.68" dia. – colour code nil	XAB 10344 A		N										
Lockwasher pulley retaining	351496 S	M	N										
Nut pulley retaining	351124 S	M	N										
ALTERNATOR ASSY. – LESS PULLEY	10346												
	XAB 10346 A	M	N										
BRUSH & SPRING SET	10347												
	XAB 10347 A	M	N										
	GB 111			O									
STATOR – WOUND	10A347												
	XAB 10A347 A	M	N										
SPRING – BRUSH	10349												
	XAB 10349 A	2	2										
	GY 913			2									

DESCRIPTION	PART NUMBER	ALTERNATOR PARTS LIST "M TO X"											
		M	N	O	P	Q	R	S	T	U	V	W	X
BRUSH – HOLDER	**10351**												
	XAB 10351 A	M	N										
	GY 1011			O									
RETAINER – FRONT BEARING	**10A355**												
	D20Z 10A355 A			O									
STOP – ROTOR	**10A360**												
	C5AZ 10A360 A			O									
INSULATOR – STATOR END	**10A361**												
	GY 620			2									
RECTIFIER ASSY.	**10376**												
	XAB 10376 B	M	N										
INSULATOR – DIODE PLATE	**10A383**												
	GY 937			O									
	GY 816 A			O									
BOLT – THROUGH FIXING	**10A396**												
	XAB 10A396 A	4	4										
	378466 S100			3									

MODEL	BODY TYPE	REMARKS	UNIT	PART NUMBER
-- 10039 -- BRACKET ASSY. -- ALTERNATOR MOUNTING				
XA/B, ZF/G	All	6 cyl. -- W/o A/C	1	XY 10039 A
XA/B, ZF/G	All	6 cyl -- with A/C	1	XA 10039 A
XA/B, ZF/G	All	6 cyl. -- bolt -- 7/16" -- 14 x 4.0" -- bracket to alt.	1	45566 S8
XA/B, ZF/G	All	6 cyl. -- lockwasher 7/16" -- brkt. to alt.	1	34808 S78
XA/B, ZF/G	All	6 cyl. -- nut -- 7/16" -- 14 brkt. to alt.	1	34670 S36
XA/B, ZF/G	All	6 cyl. -- with A/C bolt 3/8" -- 16 x 1.0" bracket & brace (2889) to compressor	1	20388 S2
XA/B, ZF/G	All	6 cyl. -- with A/C washer 3/8" -- bracket & brace (2889) to compressor	1	44728 S36
XA/B, ZF/G	All	6 cyl. -- with A/C -- bolt 3/8" -- 16 x .75" -- att. bracket to compressor	1	20348 S2
XA/B, ZF/G	All	6 cyl. -- with A/C lockwasher 3/8" -- brkt. to compressor -- O.N.R.	1	34827 GS40
XA/B, ZF/G	All	8 cyl. -- bolt 7/16" -- 14 x 6.25" alternator to block	1	384631 S36
-- 10145 -- ARM -- ALTERNATOR BELT ADJUSTING				
XA/B, ZF/G	All	6 cyl. -- W/o A/C	1	XY 10145 C
XA/B, ZF/G	All	6 cyl. -- with A/C	1	XA 10145 AA
XA/B, ZF/G	All	8 cyl.	1	XW 10145 A
XA/B, ZF/G	All	Washer -- 3/8" lock arm to alt.	1	34807 S8
XA/B, ZF/G	All	Bolt -- 3/8" -- 16 x 1.25" -- arm to alt.	1	20468 S8
XA,ZF	All	6 cyl. -- bolt -- 5/16" -- 11 x 1.92" -- arm to block --O.N.R.	1	379682 S8
XA/B, ZF/G	All	8 cyl. -- bolt 3/8" -- 16 x 1.25" -- arm to block	1	20468 S8
XA/B, ZF/G	All	6 cyl. -- with A/C -- bolt -- 5/16" -- 24 x .88" -- arm to bracket	1	20367 ESB
XA/B, ZF/G	All	6 cyl. -- with A/C nut 5/16" x 24 -- arm to brkt.	1	34443 ES8C
XA/B, ZF/G	All	6 cyl. -- nut -- 7/16" -- 14 -- bracket to alternator	a/r	34670 S36
XA/B, ZF/G	All	6 cyl. -- with A/C nut -- arm to alternator	1	34987 S2
XB,ZG	All	Bolt -- bracket to cyl. block -- 3.125" -- 18 x 2"	3	V 388449 S2
XB,ZG	All	Bolt -- bracket to w/pump -- 3.125" -- 18 x 2.25"	1	V 388450 S2
-- 10A145 -- BRACKET -- ALTERNATOR ARM BELT ADJUSTING				
XA,ZF	All	250 c.i.d. 2V -- with A/C	1	XY 10A145 A
-- 10156 -- BRACKET -- ALTERNATOR FRONT				
XA/B, ZF/G	All	8 cyl.	1	XW 10156 A
XA/B, ZF/G	All	8 cyl. -- with A/C & p/steering	1	XW 10156 B
XA/B, ZF/G	All	8 cyl. -- washer 7/16" -- bracket to alternator	a/r	34808 S78
-- 10A336 -- ADAPTOR -- ALTERNATOR MOUNTING BRACKET				
XA/B, ZF/G	All	8 cyl. -- with A/C & p/steering	1	XW 10A336 BA
-- 10A370 -- SPACER -- ALTERNATOR BRACKET				
XA, ZF	All	8 cyl.	1	GY 946 B
XB,ZG	All		1	GY 946 B
-- 10A399 -- TAG -- WARNING ALTERNATOR				
XA/B, ZF/G	All		1	XA 10A399 A
-- 10A589 -- WIRE ASSY. -- ALTERNATOR TO REGULATOR				
XA/B, ZF/G	All	With 55 amp Bosch alternator -- from 8/73 to 12/74	1	XA 10A589 A
-- 10655 -- BATTERY				
XA/B, ZF/G	All	48 amp/hr	1	AXY 5 A
XA/B, ZF/G	All	61 amp/hr -- exc. with two way radio	1	AXY 5 B
XA/B, ZF/G	All	61 amp/hr -- with two way radio	1	AXY 5 E
-- 10A659 -- COVER -- BATTERY UPPER				
XA/B, ZF/G	All	Police & taxi only	1	XB 10A659 A
-- 10A666 -- SUPPORT ASSY. -- BATTERY TRAY				
XA/B, ZF/G	All		1	XA 10A666 A
-- 10K671 -- SUPPORT ASSY. -- BATTERY TRAY REAR				
XA/B, ZF/G	All		1	XA 10K671 A
-- 10718 -- CLAMP -- BATTERY HOLD DOWN				
XA/B, ZF/G	All		1	XY 10718 A
XA/B, ZF/G	All	Nut -- att. clamp to battery	2	114323 ES8

MODEL	BODY TYPE	REMARKS	UNIT	PART NUMBER		
– – 10720 – – CAP – BATTERY						
XA/B, ZF/G	All	48 amp battery	a/r	XA	10720	A
XA/B, ZF/G	All	61 amp battery	a/r	XA	10720	B
– – 10732 – – TRAY ASSY. – BATTERY						
XA/B, ZF/G	All		1	XA	10732	AA
– – 10756 – – BOLT – BATTERY CLAMP						
XA/B, ZF/G	All		2	XY	10756	AA
– – 10804 – – REGULATOR – VOLTAGE INSTRUMENT CLUSTER						
ZF/G	All		1	ZF	10804	A
– – 10838 – – HOUSING ASSY. – INSTRUMENT CLUSTER						
XA/B	All	Exc. rally pack	1	XB	10838	A
XA/B	All	Rally pack	1	XB	10838	B
XA	All	Taxi	1	XA	10838	CA
XB	All	Taxi	1	XB	10838	C
ZF/G	All	Exc. with heated backlite	1	ZF	10838	AB
ZF/G	All	With heated backlite	1	ZG	10838	A*
XA/B	54H, 65H	Screw – No. 8 – 18 x ¾" – att. housing assy.	a/r	55928 S36		
XA/B, ZF/G	All	Screw – No. 8 – 18 x ½" – att. housing assy. – O.N.R.	a/r	52726 S40		
– – 10838 – – HOUSING ASSY. – FUEL & TEMP. INST. CLUSTER						
XA/B	All	With rally pack – also metric export	1	XA	10838	D
– – 10E838 – – HOUSING ASSY. – VOLTS & OIL INST. CLUSTER						
XA/B	All	With rally pack – also metric export	1	XA	10E838	A
– – 10K843 – – PRINTED CIRCUIT – INSTRUMENT CLUSTER						
XA/B	All	Exc. rally pack	1	XA	10K843	A
XA/B	All	Rally pack	1	XA	10K843	BA
ZF/G	All		1	ZF	10K843	A
– – 10845 – – BRACKET – BEZEL INSTRUMENT PANEL						
XA/B, ZF/G	All		1	XA	10845	A
ZF/G	All	Screw – No. 8 – 18 x ½" – att. bracket – O.N.R.	a/r	52726 S40		
– – 10850 – – BODY, POINTER & DIAL ASSY. – CHARGE INDICATOR						
XA	All	With rally pack – to 2/73	1	XA	10850	A
XA/B	All	With rally pack – from 2/73	1	XA	10850	B
– – 10852 – – BEZEL – TOP CONTROL SWITCH						
XA/B	71	Power tailgate	1	C6GY	10852	A
– – 10B870 – – FILTER – INSTRUMENT CLUSTER BACK						
XA/B	All		a/r	C20F	10B870	A
– – 10A872 – – TRIM – INSTRUMENT BEZEL CLUSTER						
ZF/G	All	Wood grain	1	ZF	10A872	AA
– – 10875 – – GASKET – INSTRUMENT CLUSTER BEZEL						
XA/B	All	With rally pack	2	CH	10875	AA
– – 10876 – – BEZEL – INSTRUMENT CLUSTER MAIN						
XA	All	Exc. rally pack – paint to suit – O.R.C. (1) XB 10875 A, (1) XB 10838 B, (1) XB 54 04810 B, (1) XB 54 04826 A	1	XA	10876	A
XA	All	Rally pack – paint to suit – O.R.C. (1) XB 10876 A, (1) XB 10838 B, (1) XB 54 04810 B, (1) XB 54 04826 A	1	XA	10876	B
XA	All	Taxi – paint to suit – O.R.C. (1) XB 10876 C, (1) XB 10838 C, (1) XB 54 04810 A (1) XB 54 04826 A	1	XA	10876	C
ZF	All	Exc. taxi – O.R.C. (1) ZG 10876 A, (1) XB 54 04810 A (1) XB 54 04826 A	1	ZF	10876	A
ZF	All	Taxi only – paint to suit – O.N.R.	1	ZF	10876	B
XB	All	Exc. rally pack	1	XB	10876	A
XB	All	Rally pack – Note: O.R.B. XB 10876 A, Dealer to rework by cutting out clock face and paint to suit	1	XB	10876	B
XB	All	Taxi	1	XB	10876	C
XB	All	With heated rear window	1	XB	10876	D
XB	All	With heated rear window & rally pack	1	XB	10876	E
ZG	All	Except taxi	1	ZG	10876	A
ZG	All	Taxi	1	ZG	10876	B

MODEL	BODY TYPE	REMARKS	UNIT	PART NUMBER
– – 10A882 – – MASK ASSY. – INSTRUMENT CLUSTER				
XA/B	All		1	XA 10A882 AA
ZF/G	All	Miles	1	ZF 10A882 A
ZF/G	All	Kilos – export	1	ZF 10A882 C
ZG	All	Kilos	1	ZG 10A882 BA
– – 10B882 – – PLATE & FILTER ASSY. – INSTRUMENT CLUSTER				
XA	All	Exc. rally pack	1	XA 10B882 A
XA	All	Rally pack	1	XA 10B882 BA
XB	All	Exc. rally pack	1	XB 10B882 A
XB	All	Rally pack	1	XB 10B882 B
ZF/G	All		1	ZF 10B882 A
– – 10D882 – – PLATE & FILTER ASSY. – FUEL & TEMP. BACK				
XA/B	All	Rally pack	1	XA 10D882 A
– – 10D883 – – PLATE & FILTER ASSY. – VOLTS & OIL BACK				
XA/B	All	Rally pack	1	XA 10D883 A
– – 10884 – – SENDER ASSY. – WATER TEMP. INDICATOR				
XA,ZF	All	6 cyl. – to 10/73	1	C3UF 10884 A
XA,ZF	All	8 cyl. – to 10/73	1	XW 10884 A
XB,ZG	All	6 cyl. – from 10/73	1	C5EH 10884 B
XB,ZG	All	8 cyl. – from 10/73	1	XA 10884 A
XA,ZF	All	351 c.i.d. – rework wire terminal to fit	1	SW 924
– – 10B885 – – LENS – INSTRUMENT CLUSTER				
XA/B	All		1	XA 10B885 A
– – 10D885 – – LENS – FUEL & TEMP. INST. CLUSTER				
XA	All	Rally pack – to 2/73	1	XA 10D885 A
XA/B	All	Rally pack – from 2/73	1	XA 10D885 B
– – 10D886 – – LENS – VOLTS & OIL INST. CLUSTER				
XA	All	Rally pack – to 2/73	1	XA 10D886 A
XA/B	All	Rally pack – from 2/73	1	XA 10D886 B
– – 10A890/1 – – LENS – INSTRUMENT CLUSTER				
ZF/G	All		1	ZF 10A891 AA
– – 10A906/7 – – BRACKET ASSY. – BEZEL ATTACHING				
XA/B, ZF/G	All	R.H.	1	XA 10A906 AA
XA/B, ZF/G	All	L.H.	1	XA 10A907 AA
– – 10C914 – – INSULATOR – INSTRUMENT CLUSTER				
XA/B	All	Exc. rally pack	a/r	XA 10C914 AA
– – 10B924 – – SWITCH ASSY. – SEAT BELT WARNING LIGHT				
XA/B, ZF/G	All		1	SW 1094
– – 10A936 – – JEWEL – INSTRUMENT CLUSTER WARNING LAMP				
XA/B	All	Oil pressure – exc. rally pack	1	XA 10A936 FA
XA/B	All	Brake – exc. rally pack	1	XA 10A936 CA
XA/B	All	Alternator – exc. rally pack	1	XA 10A936 DA
XA/B	All	Seat belts – exc. rally pack	1	XA 10A936 EA
XA/B	All	Main beam	1	XA 10A936 GA
XA/B	All	Oil pressure blanking – rally pack	1	XA 10A936 JB
XA/B	All	Brake – rally pack	1	XA 10A936 MA
XA/B	All	Alternator – rally pack	1	XA 10A936 KA
XA/B	All	Seat belt – rally pack	1	XA 10A936 LA
ZF/G	All	Turn signal – O.N.R.	2	ZF 10A936 AA
ZF/G	All	Seat belts	1	ZF 10A936 BA
ZF/G	All	Brake	1	ZF 10A936 CA
ZF/G	All	Alternator	1	ZF 10A936 DA
ZF/G	All	Oil pressure	1	ZF 10A936 EA
ZF/G	All	Main beam – O.N.R.	1	ZF 10A936 FA

MODEL	BODY TYPE	REMARKS	UNIT	PART NUMBER		
– – 10942 – – WIRING ASSY. – INSTRUMENT CLUSTER						
XA	All	Exc. rally pack	1	XA	10942	C
XA	All	Rally pack	1	XA	10942	D
ZF	All		1	ZF	10942	A
XB	All	Exc. rally pack – to 12/74	1	XB	10942	A
XB	All	Exc. rally pack – from 12/74	1	XB	10942	AC*
XB	All	Rally pack – to 12/74	1	XB	10942	B
XB	All	Rally pack – from 12/74	1	XB	10942	BC*
ZG	All	To 12/74	1	ZG	10942	A
ZG	All	From 12/74	1	ZG	10942	AB*
– – 10B942 – – WIRING ASSY. – INST. CLUSTER AUX. CHARGE						
XA/B	All	Rally pack	1	XA	10B942	A
– – 10B944 – – CLUSTER ASSY. – AUXILIARY INSTRUMENT – VOLTS & OIL						
XA	All	Rally pack – to 2/73	1	XA	10B944	A
XA/B	All	Rally pack – from 2/73 to 6/74	1	XA	10B944	C
XB	All	Rally pack – from 6/74	1	XB	10B944	A*
XA/B	54H, 65H	Export – metric – to 6/74	1	XA	10B944	D
– – 10D944 – – CLUSTER ASSY. – AUXILIARY INSTRUMENT – FUEL & TEMP.						
XA	All	Rally pack – to 2/73	1	XA	10D944	A
XA/B	All	Rally pack – from 2/73	1	XA	10D944	C
XA/B	54H, 65H	Export – metric	1	XA	10D944	D
– – 10A949 – – GASKET – INSTRUMENT CLUSTER						
XA/B	All		1	XA	10A949	C
– – 10970 – – BODY – DIAL & POINTER ASSY. – TEMP. INDICATOR						
XA/B	All	Exc. rally pack	1	XA	10970	A
XA/B	All	Rally pack	1	XA	10970	B
XA/B	54H, 65H	Metric – export only	1	XA	10970	C
ZF/G	All		1	ZF	10970	A
– – 10D992 – – JEWEL – INSTRUMENT PANEL WARNING LIGHT						
XA/B,ZF/G	All	Orange – heated backlite warning	1	XA	10D992	A

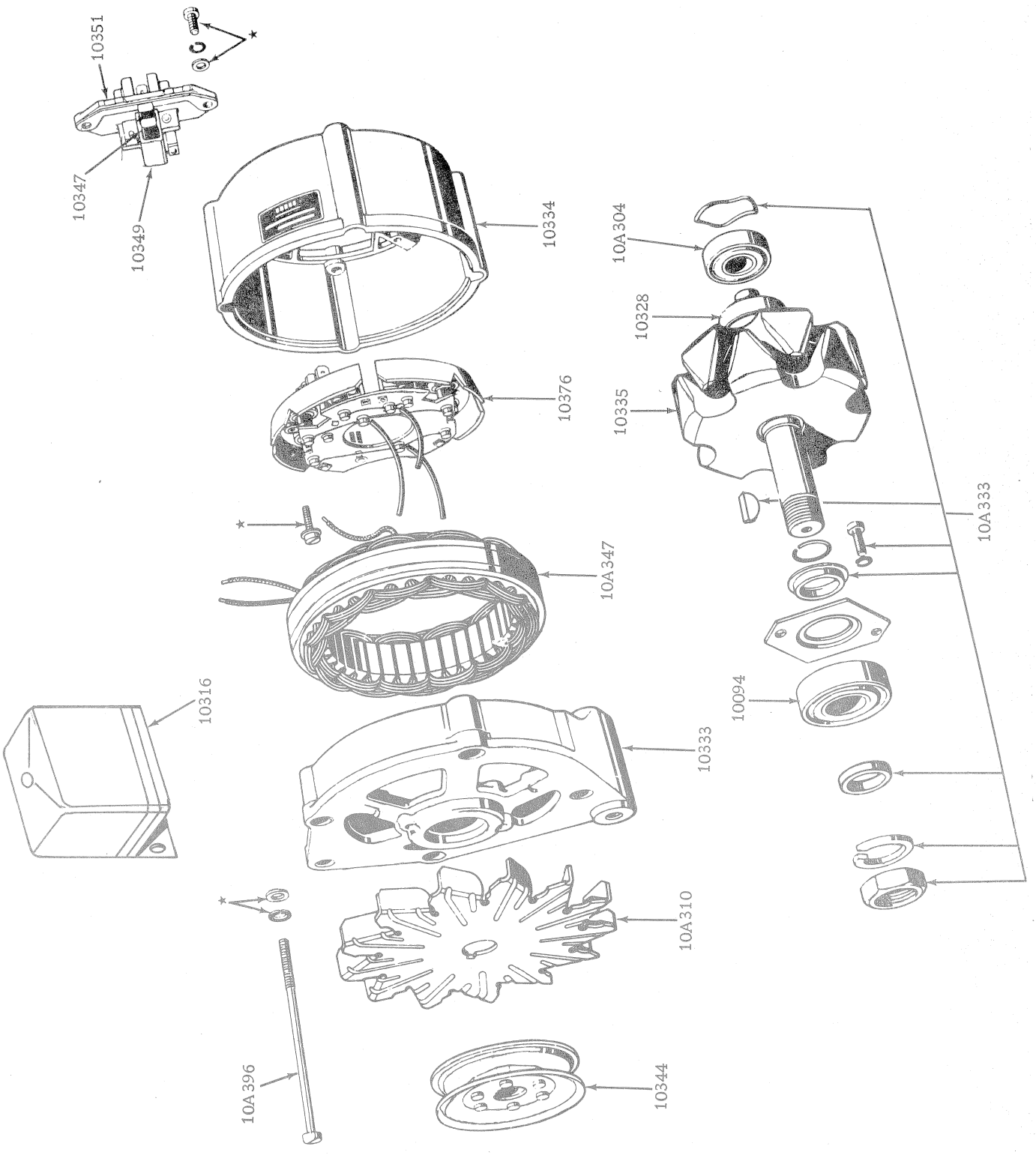

ALTERNATOR - BOSCH

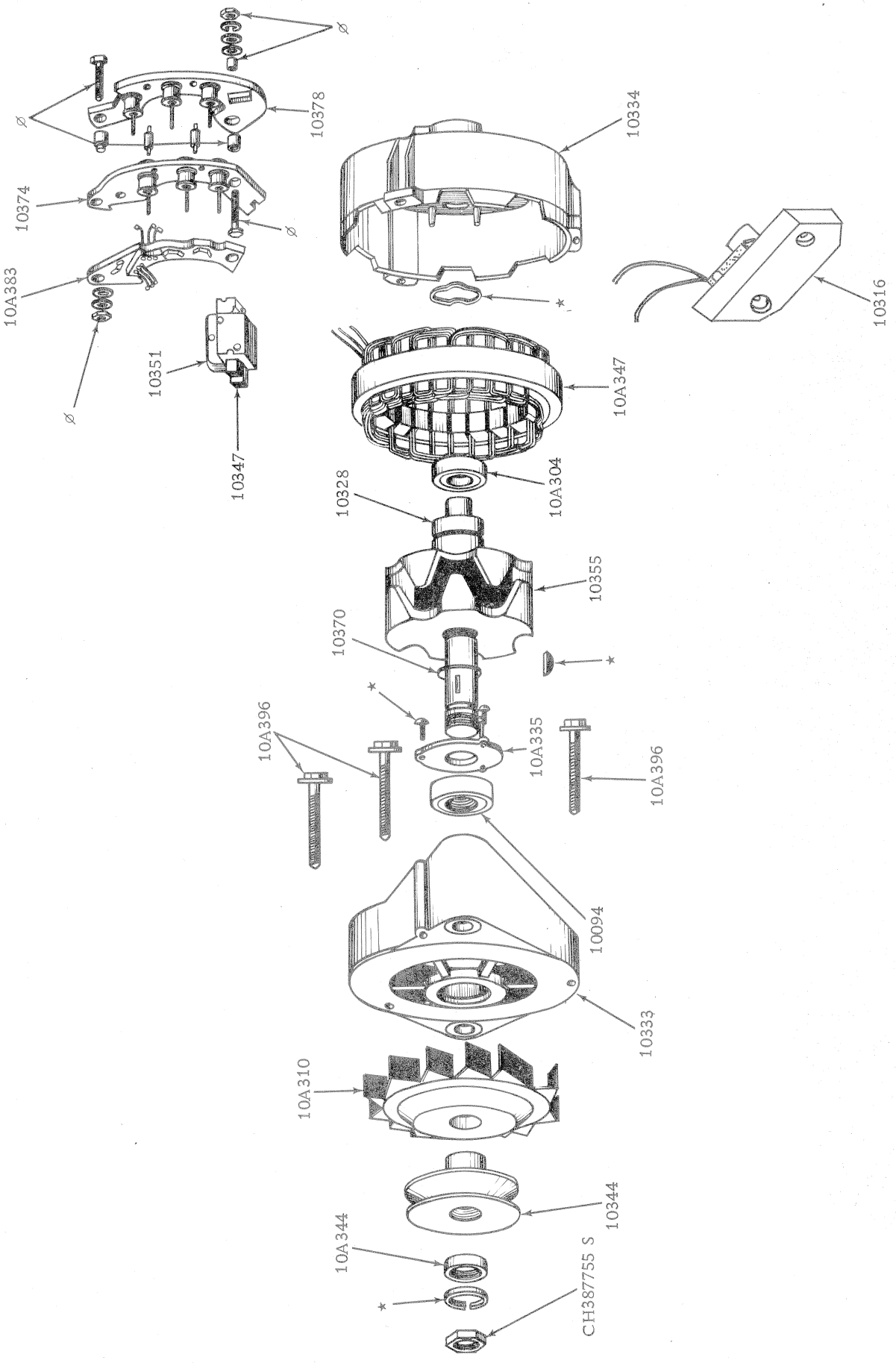

Ø PART OF 10B301 SUNDRY PARTS SET

ALTERNATOR- LUCAS

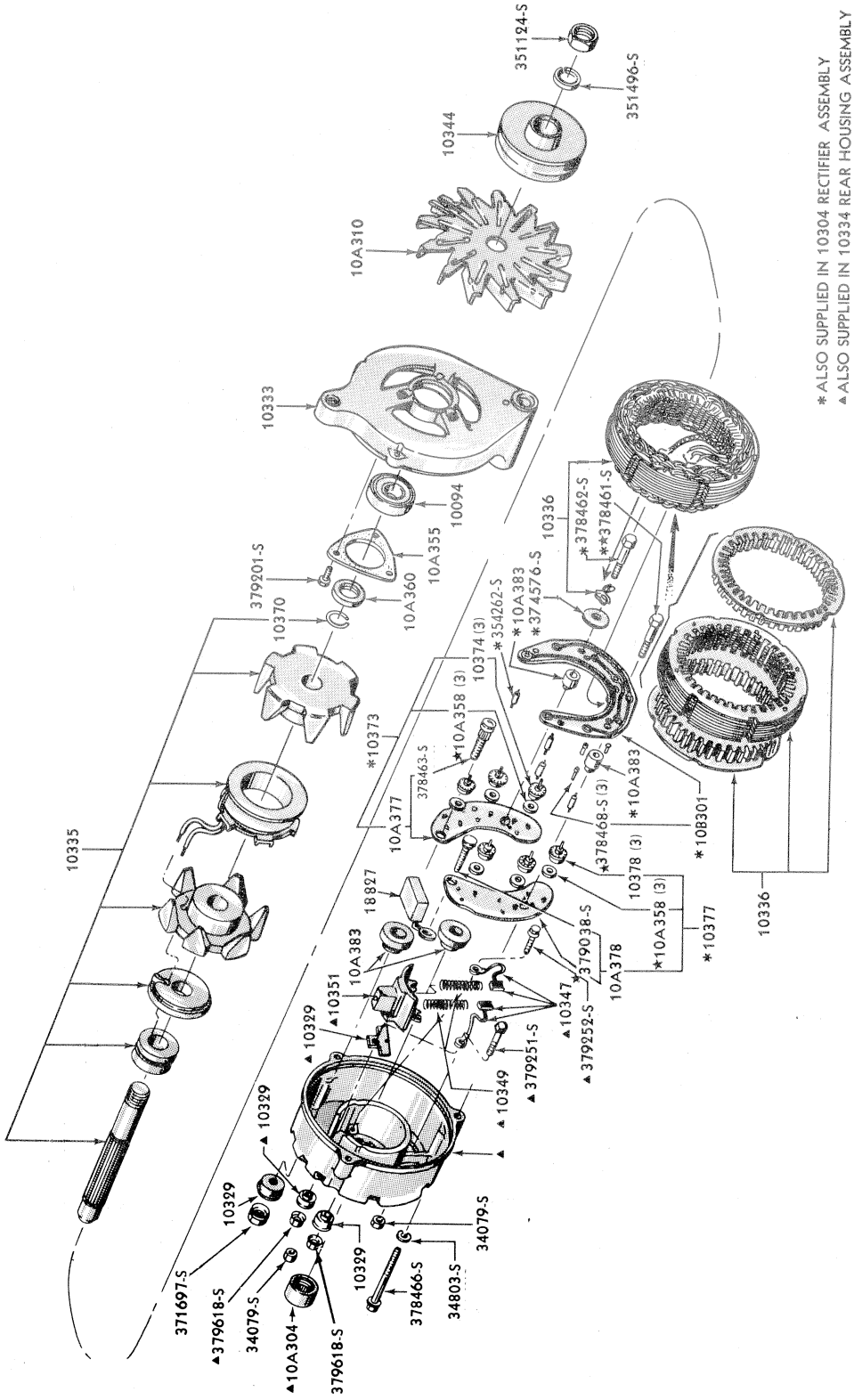

ALTERNATOR - MOTORCRAFT

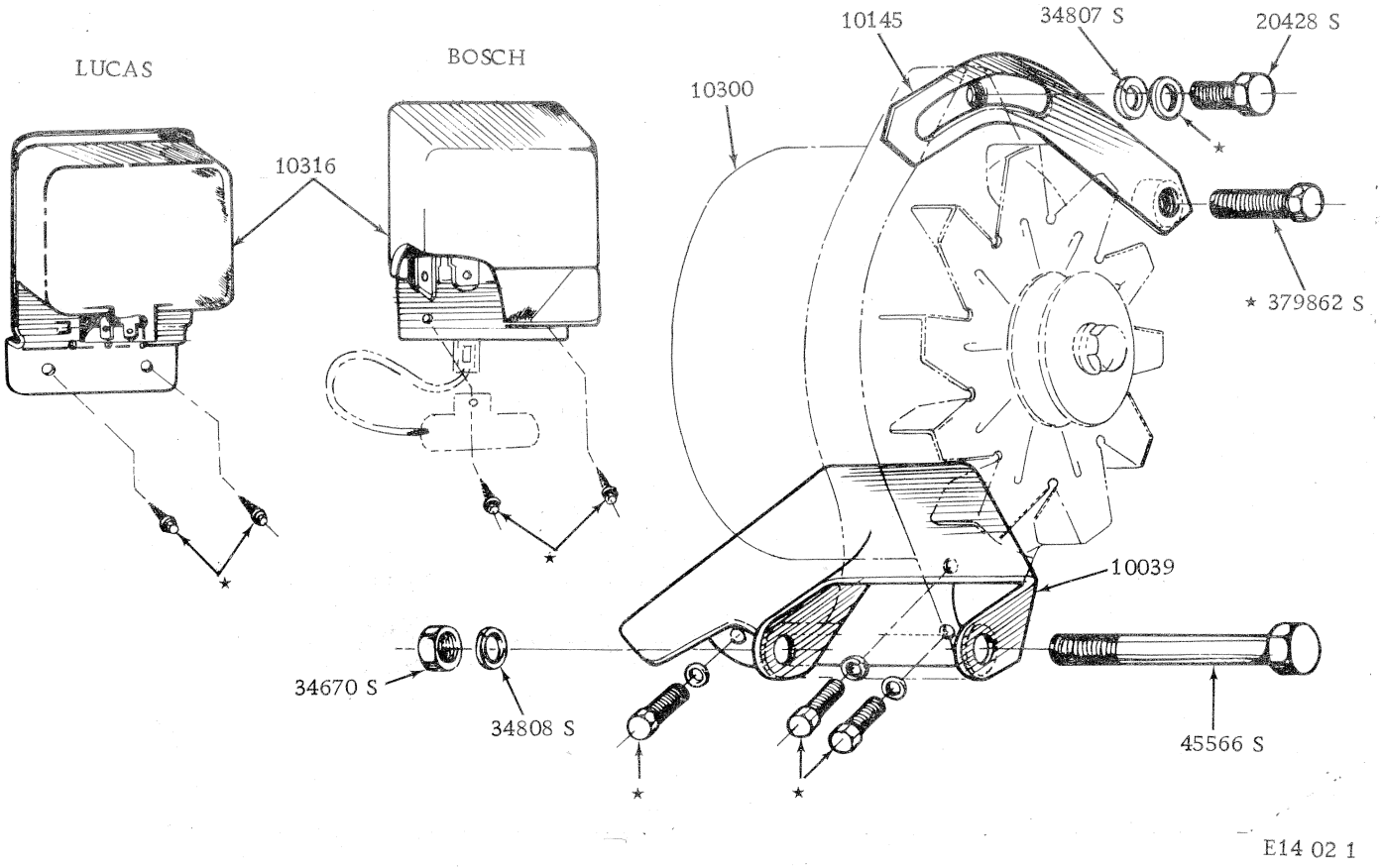

E14 02 1

ALTERNATOR . REGULATOR AND MOUNTING BRACKETS 6CYL

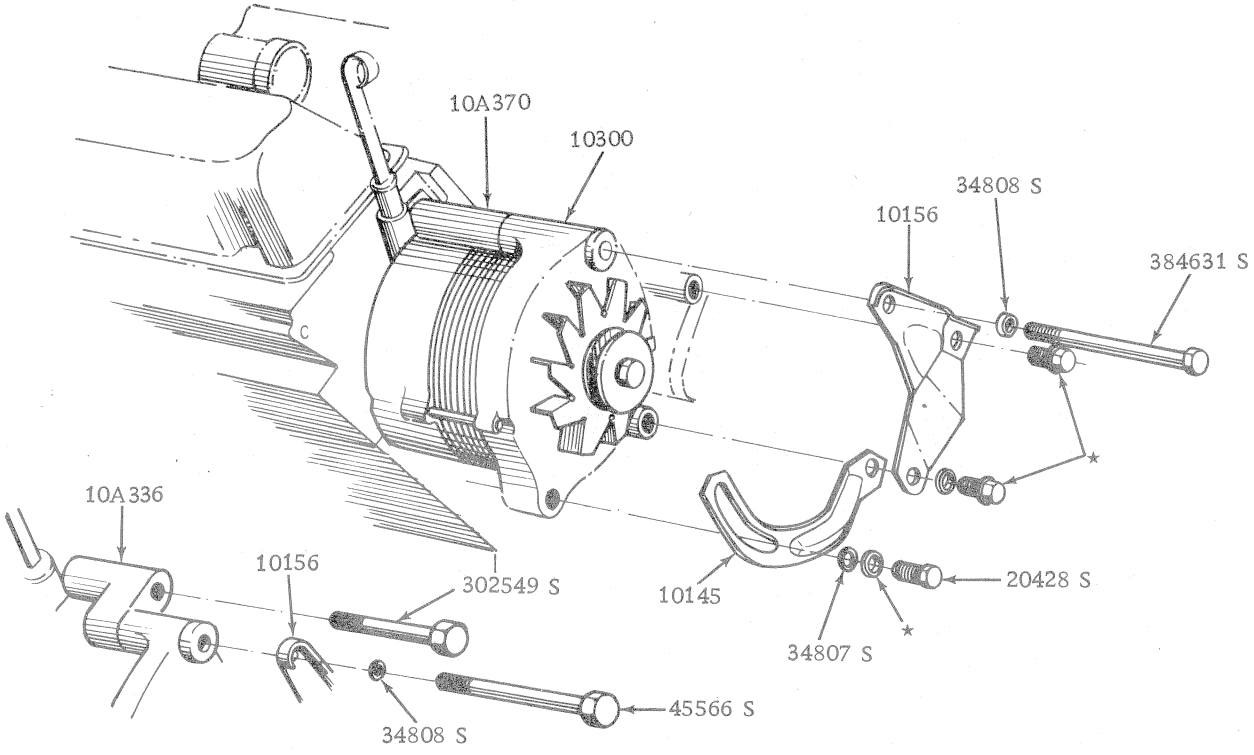

P/STEERING&A/COND

E14 02 1

ALTERNATOR AND MOUNTING BRACKETS 8CYL

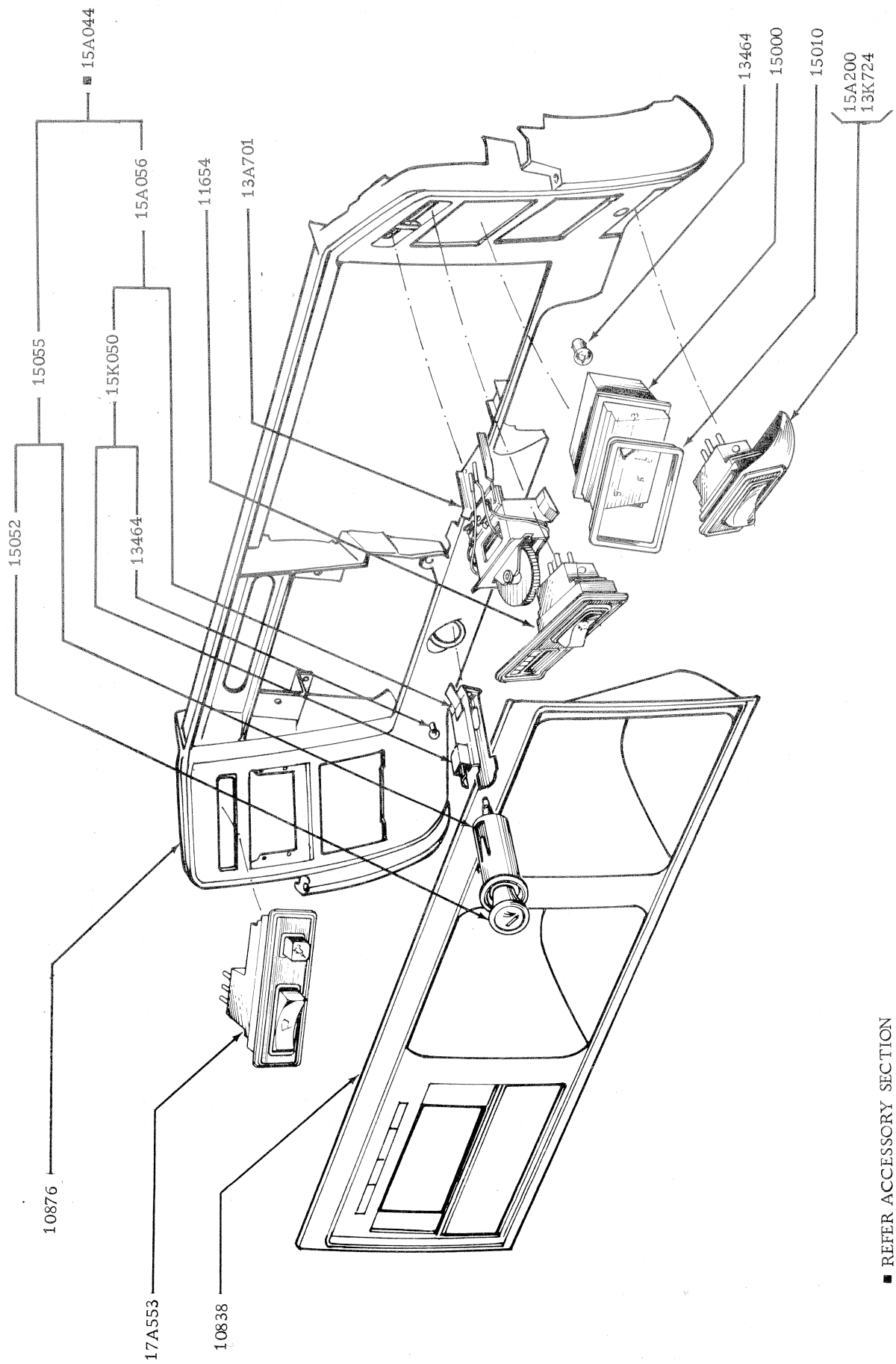

INSTRUMENT PANEL & CONTROLS - EXC 54H, 65H & RALLY PACK

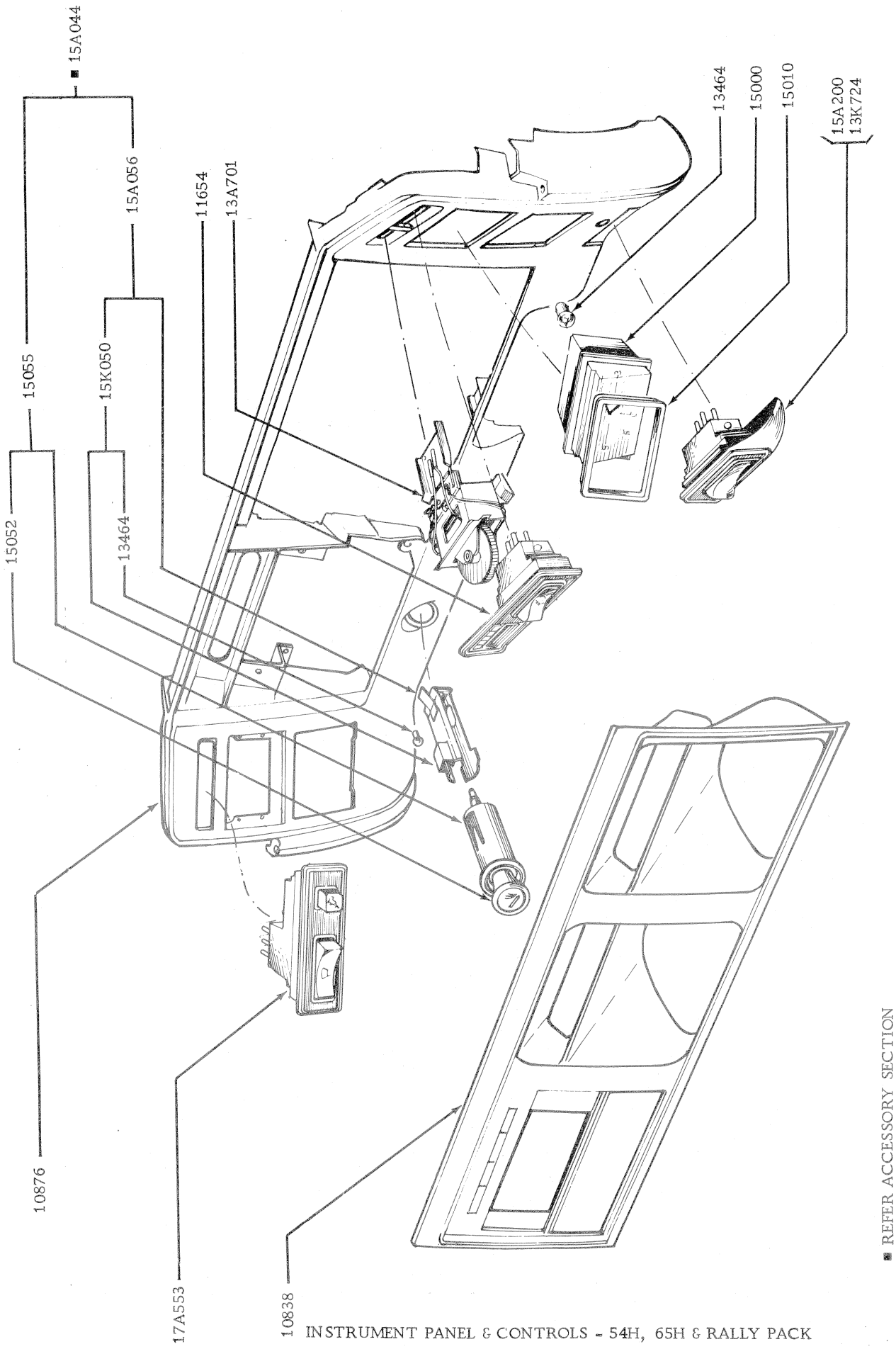

■ REFER ACCESSORY SECTION

INSTRUMENT PANEL & CONTROLS - 54H, 65H & RALLY PACK

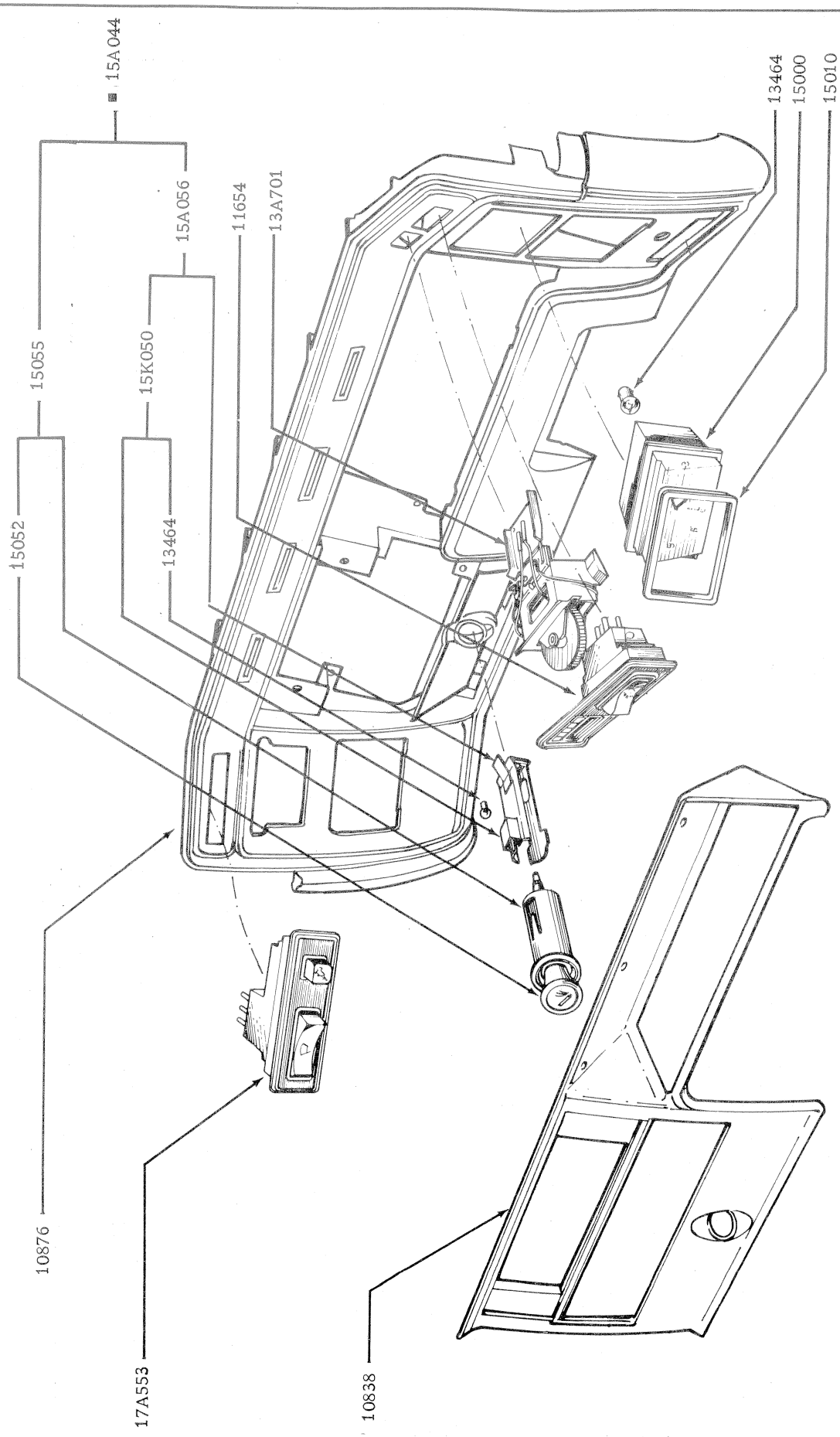

■ REFER ACCESSORY SECTION

INSTRUMENT PANEL & CONTROLS - FAIRLANE

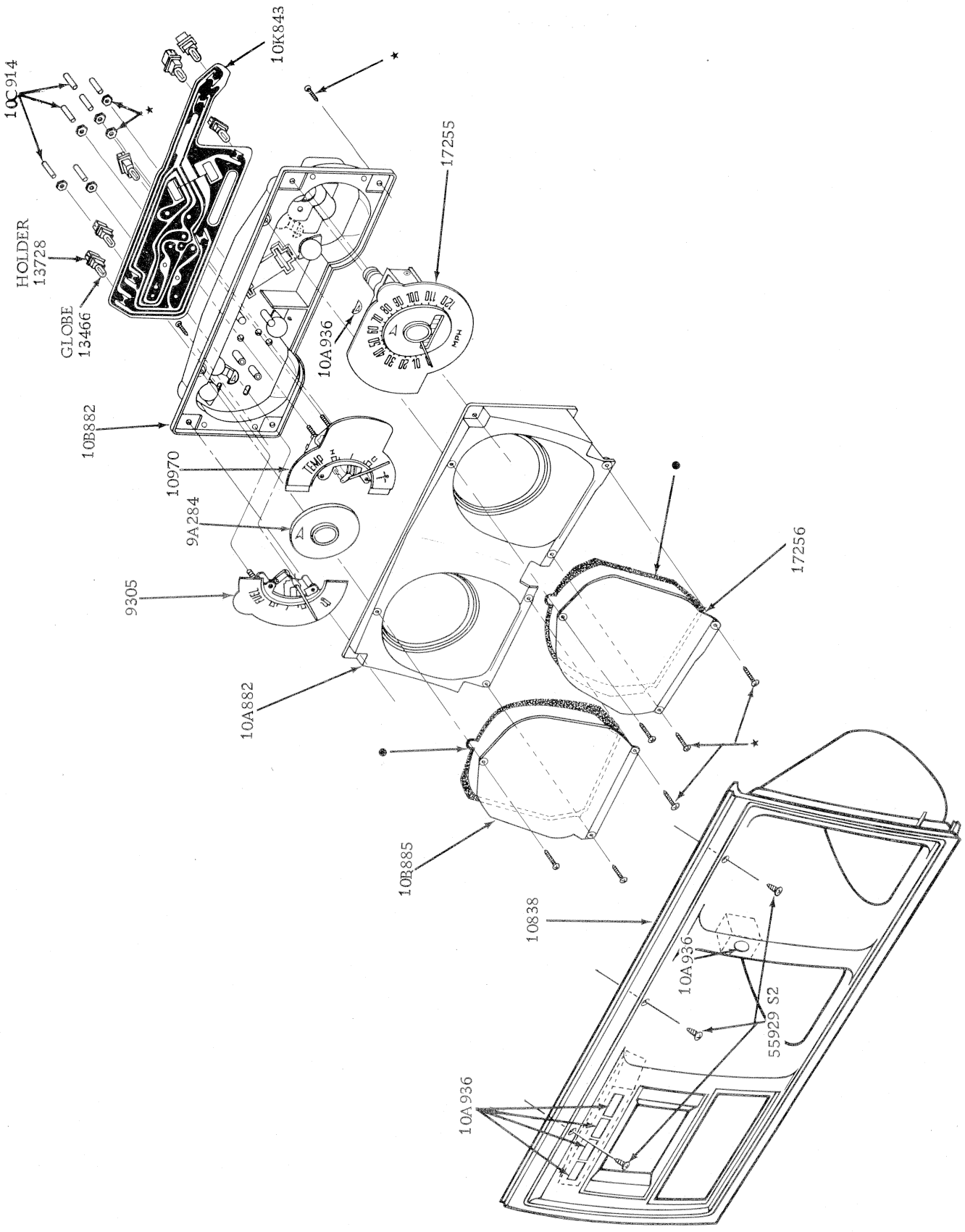

INSTRUMENT CLUSTER AND RELATED PARTS FALCON EXC. 54H, 65H AND RALLY PACK

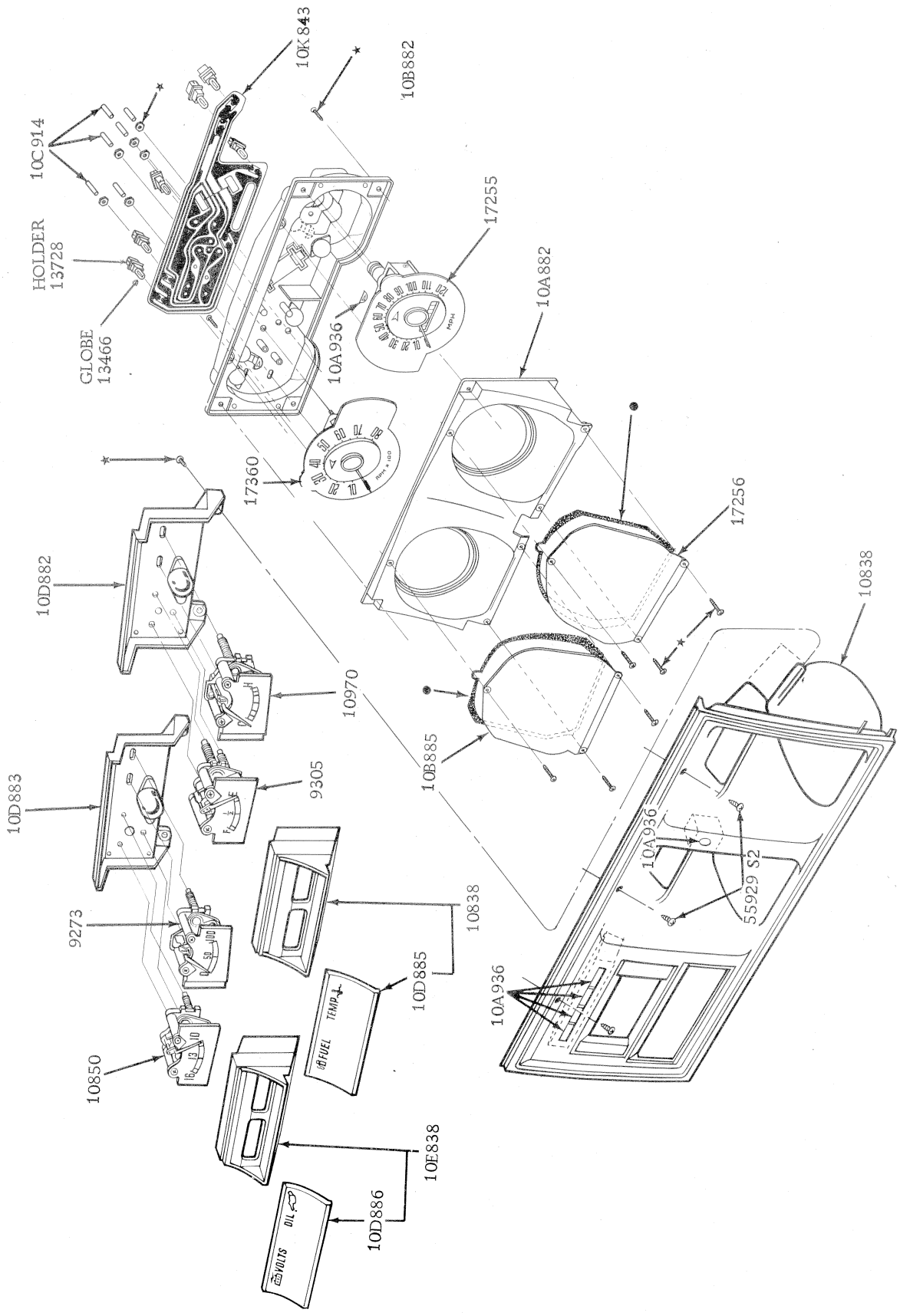

INSTRUMENT CLUSTER AND RELATED PARTS FALCON 54H, 65H AND RALLY PACK

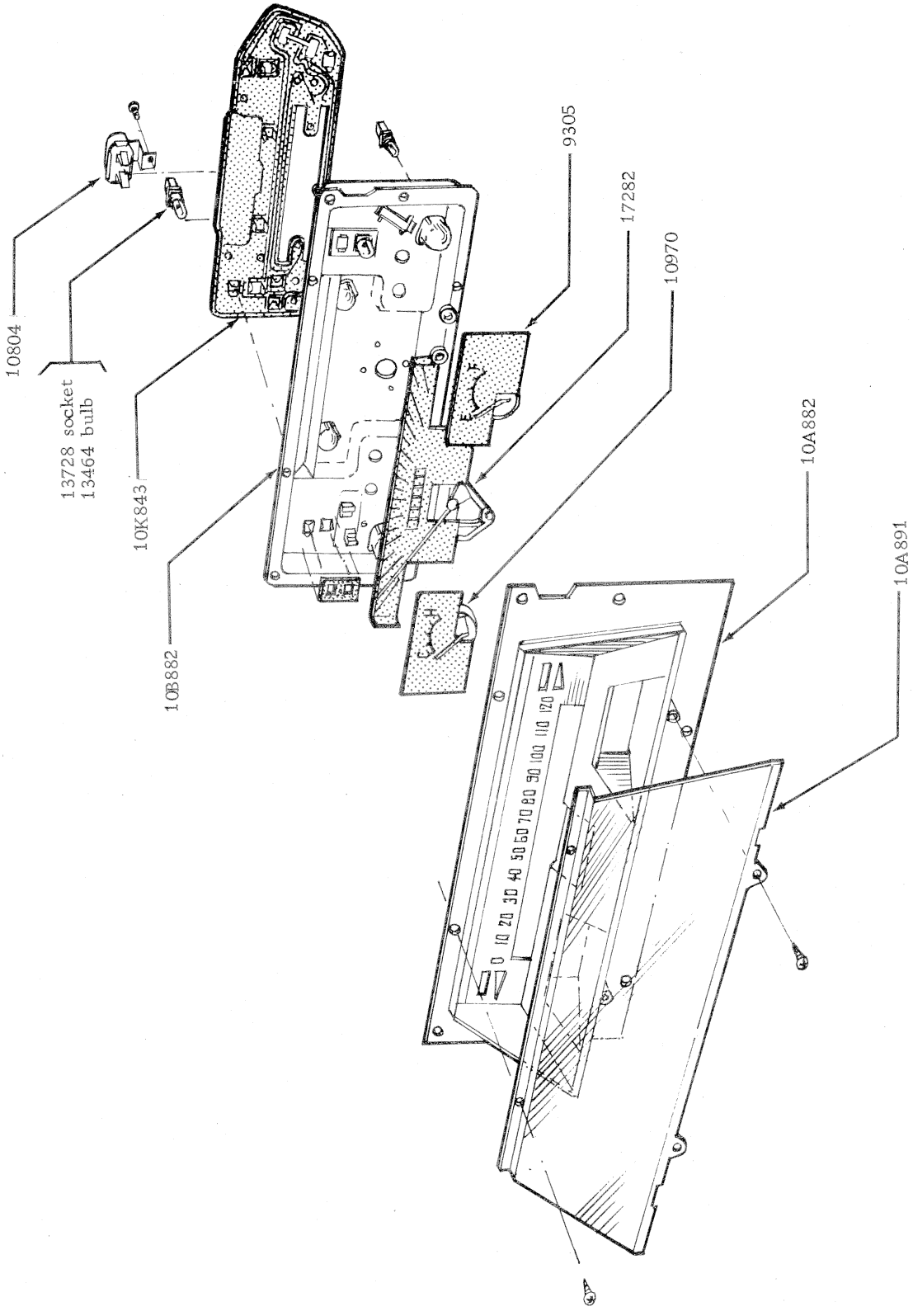

INSTRUMENT CLUSTER - FAIRLANE

HOW TO IDENTIFY STARTER MOTOR PARTS

1. Locate the tag or plate on the starter motor housing.

2. Refer to the 'Starter Motor Application Chart' to find the parts list for the model.

   Example: An XB Falcon 500 utility with 351 c.i.d. 2V engine, fitted with a Bosch pre-engaged starter motor identified 9 000 063 020 uses parts list 'D'.

   Turn to the parts list and select the component part required. Small parts kits are shown at the beginning of the parts list.

STARTER MOTOR APPLICATION CHART

MODEL/YEAR RANGE	BODY TYPE	ENGINE	TRANS-MISSION	STARTER MOTOR TYPE	IDENT-IFICATION	PART NUMBER	REPLACED BY	PARTS LIST
XA/B	All	200 c.i.d.	All	Lucas — Pre-engaged	62925070 A	XA 11001 A ▲		A
XA/B	All	200 c.i.d.	All	Lucas — Pre-engaged	62925070 B&D	11001 ▲	XA 11001 A	B
XA/B, ZF/G	All	250 c.i.d.	All	Bosch — Pre-engaged	9 000 063 007	XW 11001 A		C
XA/B, ZF/G	All	302 c.i.d. 351 c.i.d.2V	All	Bosch — Pre-engaged	9 000 063 020	XA 11001 B		D
XA/B	54H, 65H	351 c.i.d.4V	Manual	Bosch — Pre-engaged	9 000 063 020	XA 11001 B		D
XA — To 7/72	54H, 65H	351 c.i.d.4V	Auto	Motorcraft — Pre-engaged	D2AF/CA	SA 660		E
XA/B — From 7/72 — To 7/74	54H, 65H	351 c.i.d.4V	Auto	Motorcraft Pre-engaged	D3AF/BA	C20Z 11002 B	SA 660	F
XB — From 7/74	54H, 65H	351 c.i.d.4V	Auto	Motorcraft Pre-engaged	D50F/AA	SA 660 A		G

▲ ALTERNATIVE FITMENT

DESCRIPTION	PART NUMBER	STARTER MOTOR PARTS LIST "A TO L"											
		A	B	C	D	E	F	G	H	I	J	K	L
KIT — SMALL PARTS	**11A001**												
	XT 11A001 A			C	D								
Bolt — 3/8" — 16 x 1.5" — starter motor retaining	20468 S7				a/r								
Washer — 3/8" lock — starter motor retaining	34807 S8				a/r								
Bolt — 3/8" — 16 x 1.12" — starter motor retaining	20408 S2					a/r	a/r	a/r					
ARMATURE	**11005**												
	XA 11005 A	A											
	XT 11005 A			C	D								
	SM 335					E	F	G					
	XA 11005 B		B										
SEAL — REAR HOUSING BEARING	**11K013**												
	D0AZ 11K013 A					E	F	G					
WASHER (ALSO REFER 11A351)	**11036**												
Thrust	CH 11036 A	A	B										
Buffer rubber	XT 11036 A			C	D								
Thrust	SZ 628					E		G					
Thrust	C20F 11036 A						F						

DESCRIPTION	PART NUMBER	STARTER MOTOR PARTS LIST "A TO L"											
		A	B	C	D	E	F	G	H	I	J	K	L
PLATE ASSY. – BRUSH END	**11049**												
	XA 11049 A	A	B										
	XT 11049 A			C	D								
O.N.R.	SH 148					E							
	SH 172						F	G					
PLATE – OPERATING	**11A050**												
	ARC6DZ 11A050 A	A											
	XA 11A050 A		B										
BUSH – COMM. END	**11052**												
	XA 11052 A	A	B										
	XT 11052 A			C	D								
	MC 170					E	F	G					
CAP – END PLATE COVER	**11053**												
	XT 11053 A			C	D								
Washer – spring – end plate cover	AR 387594 S			C	D								
BRUSH ASSY. – GROUND	**11057**												
	18 11057						F	G					
BRUSH SET	**11057**												
	XA 11057 A	A	B										
	XT 11057 A			C	D								
Consists of (3) brushes & 1 screw	SB 134					E	F	G					
SPRING SET – BRUSH	**11059**												
	XA 11059 A	A	B										
	XT 11059 A			4	4								
	EB 11059					4							
	MS 502						4	4					
COVER – SWITCH SOLENOID	**11060**												
	XT 11060 A			C	D								
	SZ 589					E		G					
	C0DZ 11060 CMR						F						
Lockwasher – solenoid cover terminal	34806 S36			C	D								
Nut – solenoid cover – terminal – 5/16"	33922 S40			C	D								
GASKET – SOLENOID	**11065**												
0.5 mm thick	XT 11065 A			a/r	a/r								
1.0 mm thick	XT 11065 B			a/r	a/r								
	SZ 591					E	F	G					
LEVER	**11067**												
	SZ 593					E	F	G					
Pin dowel – ¼ x 5/8	72851 ES					E	F	G					
INSULATOR – SWITCH	**11068**												
3/16" I.D. x 3/8" O.D. x 5/32" thick	C2DZ 11068 A					4							
FIELD COIL ASSY.	**11081**												
	XA 11081 A	A	B										
	SC 398						F						
COIL ASSY. – STARTER MOTOR	**11082**												
	XW 11082 A			C	D								
	SC 398					E		G					

DESCRIPTION	PART NUMBER	STARTER MOTOR PARTS LIST "A TO L"											
		A	B	C	D	E	F	G	H	I	J	K	L
COIL – FIELD L.H.	**11083**												
	C6AZ 11083 A						F						
COIL – FIELD LOWER	**11084**												
	C6AZ 11084 A						F						
COIL – FIELD R.H.	**11085**												
	C6AZ 11085 A						F						
BOLT – THROUGH FIXING	**11091**												
	ARC6DZ 11091 A	2		2									
	CH 11091 B				2								
	C3AZ 10120 A					2	2	2					
	ARC4DF 11091 A		2										
Lockwasher	34905 S8							2					
WASHER – FIELD TERMINAL 3/8" I.D. oblong x 11/16" O.D. x 1/16" thick	**11093** B5A 11093 A					E	F						
WASHER – FIELD TERMINAL INSULATING 11/32" I.D. x 25/32" O.D. x 1/8" thick	**11094** 18 11094 B					E							
WASHER – FIELD TERMINAL SCREW 11/32" I.D. x 11/16" O.D. x 1/16" thick	**11095** B5A 11095 A					E							
TERMINAL – FIELD Kit	**11102** SZ 656					E	F	G					
SPRING	**11103** SZ 630					E	F	G					
SLEEVE – COIL RETAINING	**11105** C0DF 11105 A					E	F	G					
FLANGE – COIL RETAINING	**11106** C0DF 11106 A					E	F	G					
BUSHING – FIELD TERMINAL INSULATOR	**11107** 18 11107 B					E							
WASHER – THROUGH BOLT Not serviced	**11A114** XT 11A114 A			2	2								
INSULATOR – SPRING	**11116** XT 11116 A			C	D								
COVER – BAND ASSY. Includes brush	**11125** XT 11125 A			C	D								
BAND	**11126** C20Z 11126 A					E	F	G					
Screw – round head – band retaining	27185							G					
HOUSING & BUSHING – DRIVE END	**11130** SE 73 B					E	F	G					
Screw – drive O.N.R.	375605 S					E							
KIT – CONTACT POINT	**11134** SZ 641					E	F	G					
BUSHING – DRIVE	**11135** MC 209					E	F	G					

DESCRIPTION	PART NUMBER	STARTER MOTOR PARTS LIST "A TO L"											
		A	B	C	D	E	F	G	H	I	J	K	L
POST – CONTACT	**11176**												
Replaced by (1) C0DF 11104 B, (1) C8AF 11177 A													
	C20Z 11176 A					E							
	C20Z 11176 B						F						
INSULATOR – POLE SHOE	**11181**												
	C20F 11181 A					E							
SCREW – POLE SHOE	**11A181**												
	CH 11A181 A				D								
RING – DRIVE STOP	**11222**												
	SZ 604						F	G					
STOP – RING	**11223**												
	XT 11223 A			C	D								
	SZ 605					E	F	G					
DRIVE ASSY.	**11350**												
	ARC6DZ 11350 A	A											
Includes bush	XT 11350 A			C	D								
	SD 175					E	F	G					
	XA 11350 A		B										
WASHER – THRUST (ALSO REFER 11036)	**11A351**												
Steel – 15/16" I.D.	XA 11A351 B	A											
Nylon – 7/16" I.D.	XA 11A351 D	A	B										
	XA 11A351 E		B										
Steel – 7/16" I.D.	XA 11A351 C	A	B										
RING – JUMP	**11A352**												
	ARC6DZ 11A352 A	A	B										
COLLAR	**11B353**												
	XA 11B353 A	A											
Thrust	ARC4DF 11B353 A	A			D								
	XA 11B353 B		B										
BUSH – BEARING	**11357**												
	XT 11357 A			2	2								
BRACKET – DRIVE END	**11358**												
	ARC6DZ 11358 A	A											
	XT 11358 A			C									
	XA 11358 A				D								
	XA 11358 C		B										
SPRING – ENGAGING	**11375**												
	ARC6DZ 11375 A	A	B										
RING – LOCK	**11A394**												
	ARC6DZ 11A394 A	A	B										
BUSH – DRIVE END	**11395**												
	ARC0DF 11395 A	A	B										
	XT 11395 A			C	D								
SCREW	**11415**												
Pole piece	68 10044					3	3	3					
SOLENOID	**11A450**												
	ARC6DZ 11A450 A	A											
	XT 11A450 A			C	D								
	XA 11A450 A		B										
Screw – solenoid to starter – M4 x 21	AR 387595 S			2	2								
Screw – cover to solenoid	AR 387598 S			C	D								

DESCRIPTION	PART NUMBER	STARTER MOTOR PARTS LIST "A TO L"											
		A	B	C	D	E	F	G	H	I	J	K	L
BOLT – PIVOT	**11A530**												
	XA 11A530 A	A											
	XT 11A530 A			C	D								
	XA 11A530 B		B										
Lockwasher – pivot bolt	34805 S78			C	D								
NUT – PIVOT BOLT	**11A531**												
	ARC0DF 11A531 A	A											
	XT 11A531A			C	D								
	XA 11A531 A		B										
LEVER ASSY. – ENGAGING PINION	**11533**												
	ARC6DZ 11533 A	A											
	XT 11533 A			C	D								
	XA 11533 A		B										

MODEL	BODY TYPE	REMARKS	UNIT	PART NUMBER	
– – 11A005 – – SPACER – STARTER MOTOR					
XA/B, ZF/G	All	8 cyl. – man. trans.	1	XY	11A005 A
– – 11A103 – – WIRING – JUMPER					
XA	All	250 c.i.d. 2V	1	XA	11A103 A
– – 11450 – – RELAY ASSY. – STARTER MOTOR					
XA/B	54H, 65H	351 c.i.d. 4V – auto. trans. – also GTHO	1	72DA	11450 AA
XA/B	54H, 65H	Nut – No. 10 – 32 connector to relay assy.	2	34079 S78	
– – 11572 – – SWITCH ASSY. – IGNITION					
XA/B, ZF/G	All	.. ..	1	XY	11572 A
– – 11582 – – CYLINDER ASSY. – IGNITION LOCK					
XA/B, ZF/G	All	For installation discard nylon switch warning ignition	1	SW 1114	
– – 11N646 – – BREAKER ASSY. – HEADLAMP LOW BEAM CIRCUIT					
ZG	All	To 12/74	1	TD	11N646 A
ZG	All	From 12/74	1	ZG	11N646 AA*
– – 11654 – – SWITCH ASSY. – LIGHTING					
XA/B, ZF/G	All	.. ..	1	XA	11654 AA

MODEL	BODY TYPE	REMARKS	UNIT	PART NUMBER

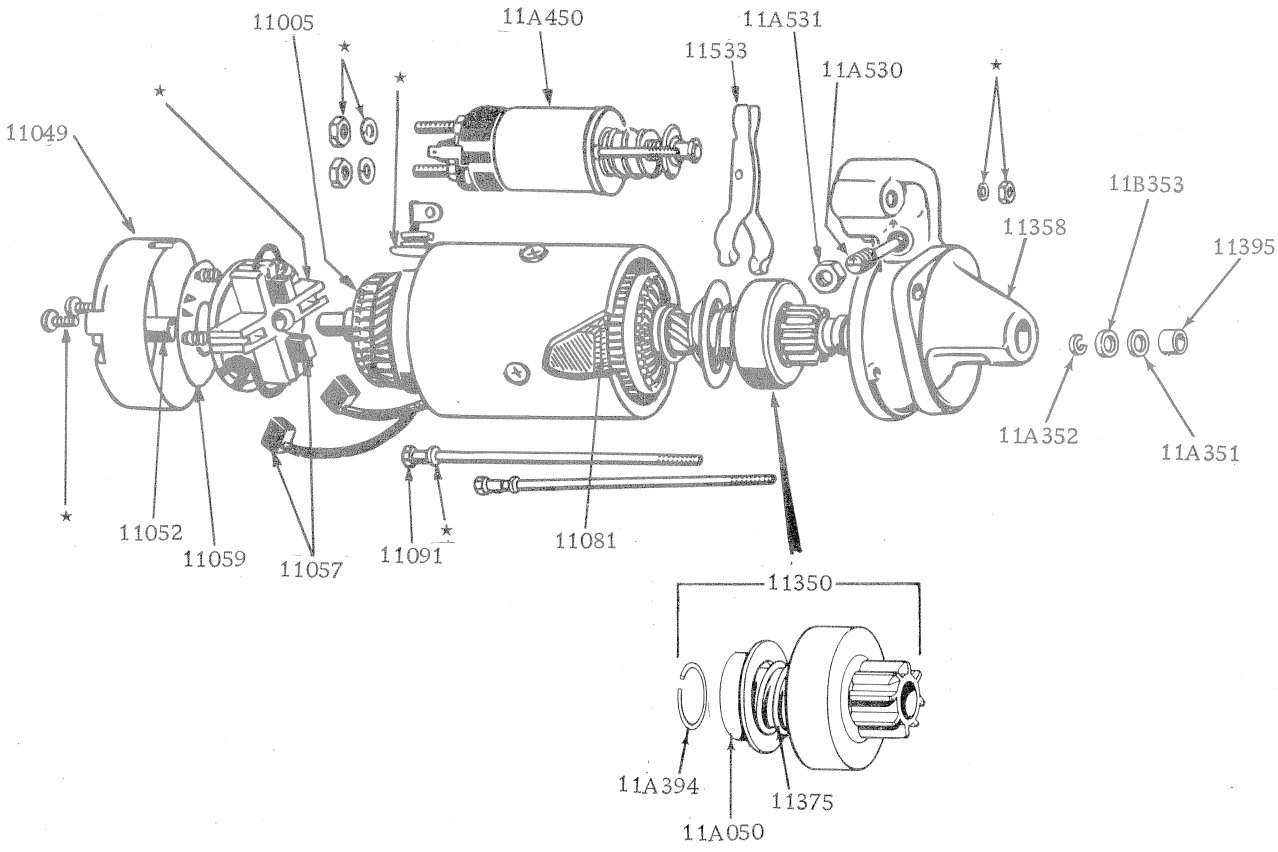

STARTER MOTOR - LUCAS

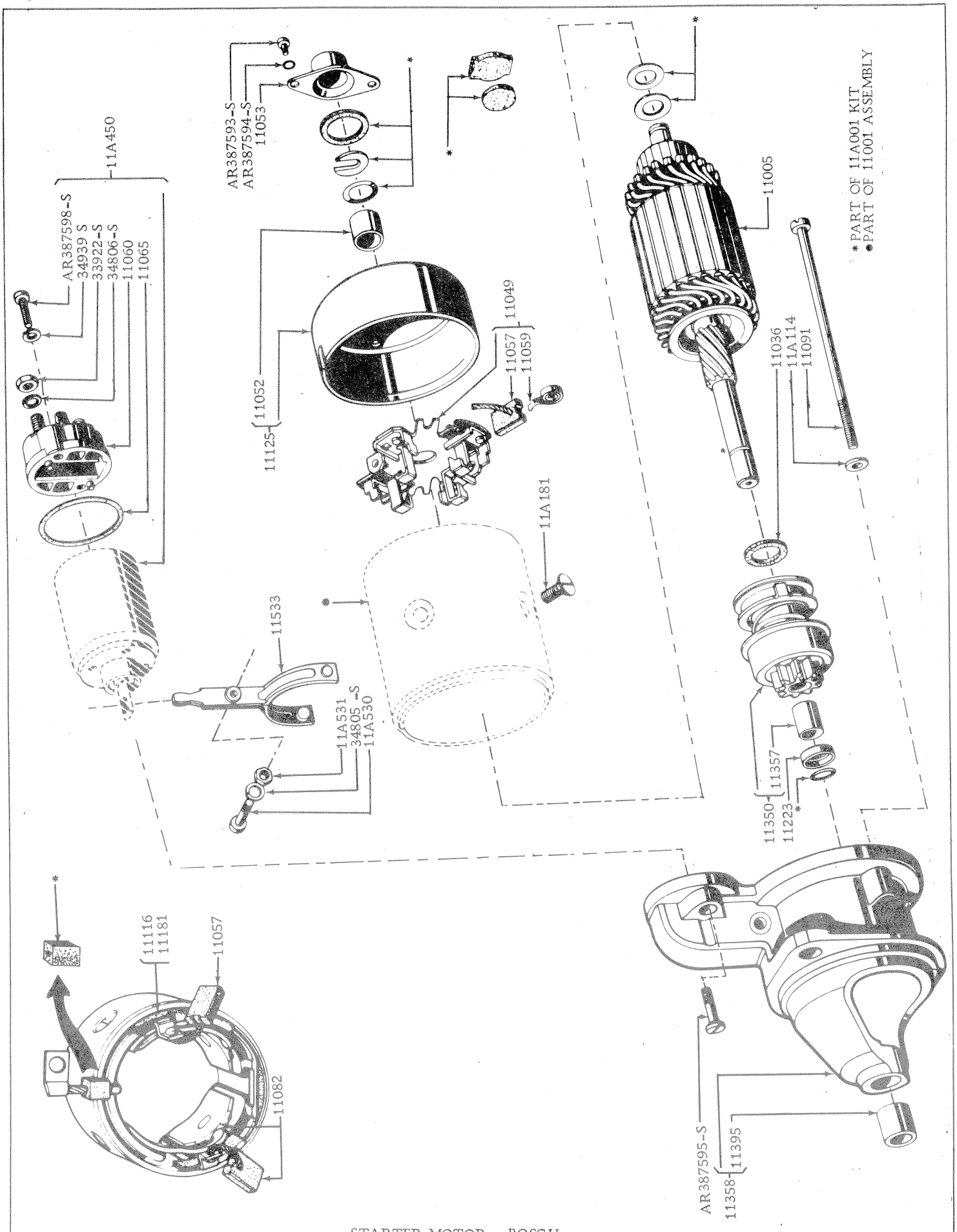

STARTER MOTOR BOSCH

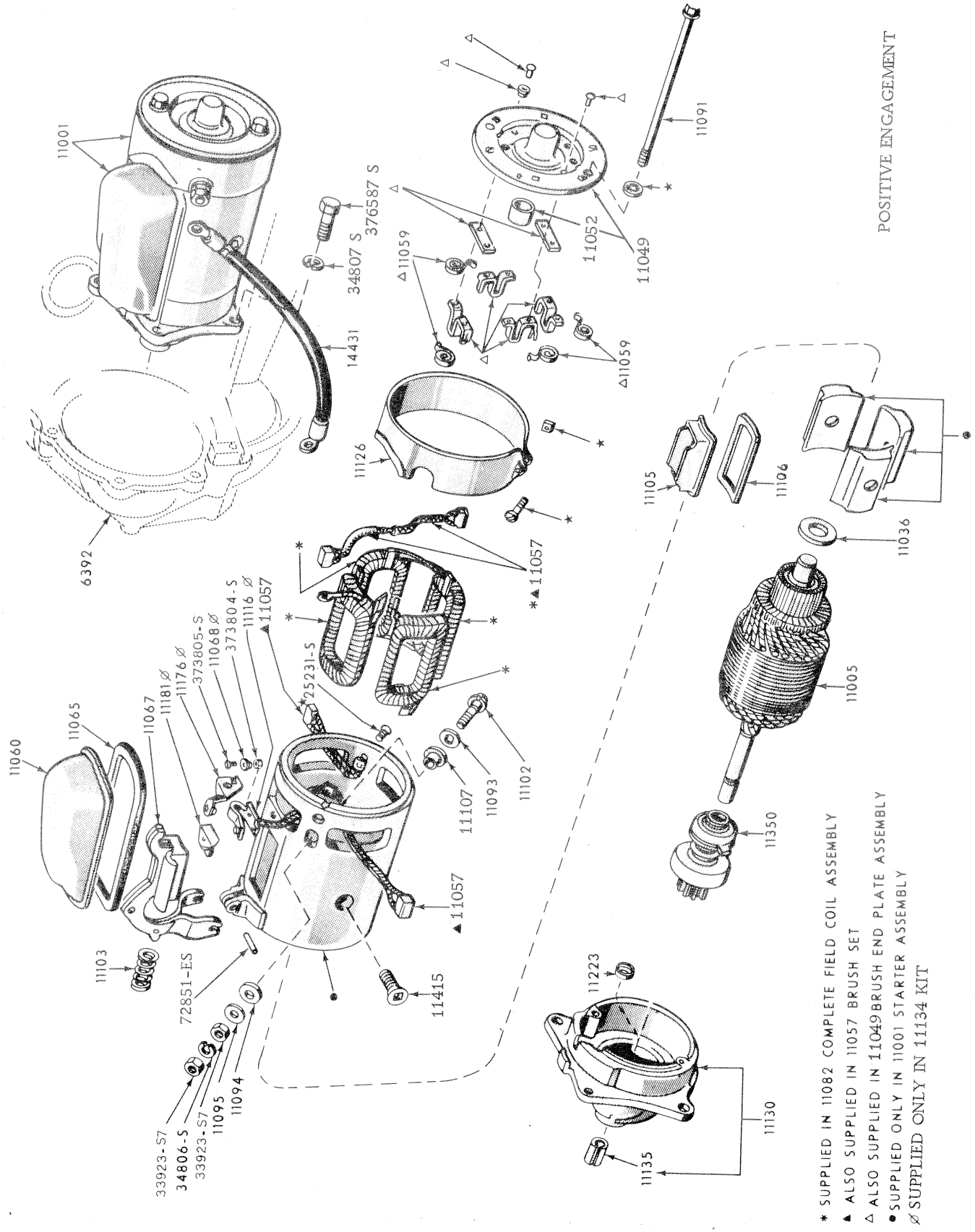

STARTER MOTOR MOTORCRAFT

HOW TO IDENTIFY DISTRIBUTOR PARTS

1. Locate the identification tag or plate on the distributor housing.

2. Refer to the 'Distributor Application Chart' to find the parts list for the model.

   Example: An XB Falcon 500 utility with 351 c.i.d. 2V engine, fitted with a Bosch distributor identified ARD1AE/EB, uses parts list 'H'.

   Turn to the parts list and select the component part required.

DISTRIBUTOR APPLICATION CHART

MODEL/ YEAR RANGE	BODY TYPE	ENGINE	ENGINE COMP.	DIST. TYPE	IDENTIFICATION	PART NUMBER	REPLACED BY	PARTS LIST
XA/B	All	200 c.i.d.	High	Bosch	ARD1DE/B	XY 12100 B		A
XA/B	All	200 c.i.d.	Low/Med	Bosch	ARD1DE/CA	XY 12100 CA		B
XA/B,ZF/G—To 1/74	All	250 c.i.d. 1V	High	Bosch	ARD10E/C	XY 12100 C		C
XB, ZG — From 1/74	All	250 c.i.d. 1V	High	Bosch	74DA/JA	XB 12100 C		F
XA/B,ZF/G	All	250 c.i.d. 1V	Low/Med	Bosch	ARD10E/EA	XY 12100 EA		D
XA, ZF	All	250 c.i.d. 2V	High	Bosch	ARD10E/D	XY 12100 D		E
XA/B, ZF/G	All	302 c.i.d.	High	Bosch	ARD1AE/AB	XA 12100 A		G
XA/B, ZF/G	All	351 c.i.d. 2V	High	Bosch	ARD1AE/EB	XA 12100 E		H
XA — To 6/72	54H, 65H	351 c.i.d. 4V ▲	High	Motorcraft	D00F/G	DA 1012		K
XA — From 6/72	54H, 65H	351 c.i.d. 4V ▲	High	Motorcraft	D00F/AF	DA 1037		L
XA/B	54H, 65H	351 c.i.d. 4V ϕ	High	Bosch	ARD1AE/DA	XA 12100 D		J
XA — GT HO	54H, 65H	351 c.i.d. 4V	High	Bosch	72DA/AA	XAG 12100 A	O.N.R.	I

▲ U.S. Build. ϕ AUST. Build.

DISTRIBUTOR ASSEMBLIES

POINTS	CONDENSOR	ROTOR	CAP.	IDENTIFICATION	PART NUMBER	REPLACED BY	PARTS LIST
ADP 5020	ADC 5000	ADR 5000	ADH 5031	ARD1DE/B	XY 12100 B		A
ADP 5020	ADC 5000	ADR 5000	ADH 5031	ARD1DE/CA	XY 12100 CA		B
ADP 5020	ADC 5000	ADR 5000	ADH 5031	ARD10E/C	XY 12100 C		C
ADP 5020	ADC 5000	ADR 5000	ADH 5031	ARD10E/EA	XY 12100 EA		D
ADP 5020	ADC 5000	ADR 5000	ADH 5031	ARD10E/D	XY 12100 D		E
ADP 5020	ADC 5000	ADR 5000	ADH 5031	74DA/JA	XB 12100 C		F
ADP 5019	ADC 5021	ADR 5021	ADH 5030	ARD1AE/AB	XA 12100 A		G
ADP 5019	ADC 5021	ADR 5021	ADH 5030	ARD1AE/EB	XA 12100 E		H
Not Serviced	ADC 5021	Not Serviced	ADH 5030	72DA/AA	XAG 12100 A	O.N.R.	I
ADP 5019	ADC 5021	ADR 5021	ADH 5030	ARD1AE/DA	XA 12100 D		J
ADP 12	ADC 12	ADR 5	ADH 6	D00F/G	DA 1012		K
ADP 12	ADC 12	ADR 5	ADG 6	D00F/AF	DA 1037		L

DESCRIPTION	PART NUMBER	DISTRIBUTOR PARTS LIST "A TO L"											
		A	B	C	D	E	F	G	H	I	J	K	L
OIL CUP	10141												
	ARC8DZ 10141 A	A	B	C	D	E							
PLUG – DISTRIBUTOR DIAPHRAGM	12A022												
	DZ 404											K	
BUTTON – DIST. BREAKER PLATE SUPPORT	12072												
	D2AZ 12072 A												3
SLEEVE – SHAFT PLATE	12A075												
	C2AZ 12A075 A											K	
HOUSING ASSY. – DISTRIBUTOR TERMINAL	12106												
	ADH 5031	A	B	C	D	E	F						
	ADH 5030							G	H	I	J		
	ADH 6											K	L
AIR VENT – DISTRIBUTOR O.N.R.	12A106												
	XY 12A106 A*	A	B	C	D								
BUSHING – UPPER	12120												
	ARC8DZ 12120 A	A	B	C	D	E							
	XA 12120 A						F	G	H	I	J		
	MC 175											K	L
BRUSH ASSY.	12122												
	ARC8DZ 12122 A	A	B	C	D	E	F	G	H	I	J		
BUSHING – LOWER	12132												
	MC 176											K	
SEAL – BASE TO BLOCK	12143												
	DZ 1											K	
	DZ 3												L
CLAMP – TERMINAL HOUSING	12144												
	XW 12144 A	2	2	2	2	2	2	2	2	2	2		
	DZ 337											2	2
RIVET – DISTRIBUTOR CAP CLAMP	12145												
	B 12145											2	2
SNAP RING – BREAKER PLATE	12146												
	ARC8DZ 12146 A	A	B	C	D	E	F	G	H	I	J		
RETAINER – DISTRIBUTOR BREAKER PLATE	12146												
	D2AZ 12146 A												L
PLATE ASSY. – BREAKER	12151												
	XY 12151 A	A	B	C	D	E	F						
	XW 12151 A							G	H		J		
Lower	DB 7											K	
Upper	DB 8											K	
Lower	D2AZ 12151 B												L
Upper	D2AZ 12151 C												L
Assy. – inc's plates, points & condenser	DB 187												L
Not serviced	12151									I			
Washer "C"	351825 S											K	
Spring washer	372395 S											K	
Washer flat	372396 S8											K	

DESCRIPTION	PART NUMBER	DISTRIBUTOR PARTS LIST "A TO L"											
		A	B	C	D	E	F	G	H	I	J	K	L
POINT SET	12171												
	ADP 5020	A	B	C	D	E	F						
	ADP 5019							G	H		J		
Not serviced	12171									2			
	ADP 12											K	L
Screw – att. 12171, 12264 & 12300 to 12151	DZE 426												3
SHAFT ASSY.	12175												
	ARC8DZ 12175 A	A	B	C	D	E	F						
	XA 12175 A							G	H	I	J		
	DF 369 A											K	
Inc's weights – not serviced	DF 369 C												L
Washer	AR 387550	A	B	C	D	E	F	G	H	I	J		
Washer – thrust between 12210 & 12175	379039 S											K	
PIN	12A175												
	XW 12A175 B	2	2	2	2	2	2	2	2	2	2		
RETAINER – CAM	12177												
	B7A 12177 A											K	L
WASHER	12179												
Shaft thrust – upper	DZ 413											K	L
SCREW & WASHER	12A179												
Attach condenser & vacuum control unit	XW 12A179 A	2	2	2	2	2	2	2	2	2	2		
SCREW & WASHER	12B179												
	XW 12B179 A							G	H		J		
LINK – DISTRIBUTOR BREAKER PLATE	12A186												
	D2AZ 12A186 A												L
SPRING – DISTRIBUTOR BREAKER PLATE	12A187												
	D2AZ 12A187 A												L
WEIGHTS	12188												
	ARC8DZ 12188 A	2	2	2	2	2	2						
Stamped type	XW 12188 A							2	2	2	2		
Circlip	AR 387548 S	2	2	2	2	2	2	2	2	2	2		
Spacer ring	AR 387549 S	A	B	C	D	E	F	G	H	I	J		
Ring	379023 S8B												L
SPRING	12192												
Helical light	XW 12192 B	A											
Helical heavy	XW 12192 F	A											
	XY 12192 A			C	D								
	XY 12192 B			C									
	XY 12192 D				D								
	XW 12192 E		2										
Helical heavy	XW 12192 E							G		I			
	XW 12192 A					E	F				J		
	XY 12192 F					E							
Heavy	XB 12192 A						F						
Helical light	XA 12192 A							G		I			
Helical heavy	XA 12192 B								H				
Helical light	XW 12192 C								H				
Primary	MS 474											K	
Secondary	MS 483											K	
Primary	MS 472												L
Secondary	MS 467												L
Vacuum	B7AZ 12192 B											K	L
Heavy	XA 12192 C										J		

DESCRIPTION	PART NUMBER	DISTRIBUTOR PARTS LIST "A TO L"											
		A	B	C	D	E	F	G	H	I	J	K	L
COLLAR – SHAFT	12195												
	XA 12195 A							G	H				
	7HA 12195											K	
	C8VY 12195 A												L
Pin	67555 S												L
ROTOR ASSY. – DISTRIBUTOR	12200												
	ADR 5000	A	B	C	D	E	F						
	ADR 5021							G	H		J		
Not serviced	12200									I			
	ADR 5											K	L
STOP – VACUUM ADVANCE	12202												
	B7A 12202 A											K	
	B8A 12202 A												L
CAM ASSY.	12210												
	XY 12210 A	A	B										
	XY 12210 B			C	D	E							
	XA 12210 A							G					
	XA 12210 B								H				
	DF 342											K	L
	XA 12210 C										J		
	XB 12210 A						F						
WIRE ASSY. – PRIMARY TERMINAL	12216												
	DW 34											K	L
WIRE ASSY. – BREAKER GROUND	12264												
	ML 291											K	L
CLAMP – DISTRIBUTOR TO CYLINDER BLOCK													
	12270												
	CH 12270 A	A	B	C	D	E	F	G	H	I	J	K	L
Screw & lockwasher – clamp to cyl. block	42846 S2	A	B	C	D	E	F	G	H	I	J	K	L
CONDENSER	12300												
	ADC 5000	A	B	C	D	E	F						
	ADC 5021							G	H	I	J		
	ADC 12											K	L
GASKET – DIAPHRAGM VACUUM CONNECTOR													
	12320												
5/8" I.D. – ¾" O.D. x 1/32" thick	B7A 12320 A											K	L
DIAPHRAGM – VACUUM CONTROL	12370												
	XY 12370 A	A		C		E							
	XY 12370 B		B		D								
	XA 12370 C							G	H				
	DD 377											K	
	DD 387												L
	XA 12370 D										J		
	XB 12370 A						F						
GEAR – DRIVEN	12390												
	DZ 364	A	B	C	D	E	F						
	DZ 365							G	H		J	K	L

MODEL	BODY TYPE	REMARKS	UNIT	PART NUMBER		
– – 12029 – – COIL ASSY.						
XA/B, ZF/G	All	6 cyl.	1	XY	12029	A
XA/B, ZF/G	All	8 cyl. 2V	1	XA	12029	AA
XB	All	8 cyl. 4V – from 1/74	1	XA	12029	AA
XA/B	All	8 cyl. 4V – to 12/73	1	DG 5		
XA/B, ZF/G	All	6 cyl. – screw 5/16 – 18 x .75 – att. strap & coil assy. to cyl. block – O.N.R.	2	57633 S36		
XB, ZG	All	Screw & washer – coil to cyl. block	2	42719 S		
– – 12043 – – STRAP – COIL						
XA/B, ZF/G	All	351 4V – from 7/72 to 12/73 – O.N.R.	1	DY 95		
– – 12A091 – – VALVE ASSY. – DISTRIBUTOR VACUUM CONTROL						
XA/B, ZF/G	All	250, 302, 351 c.i.d. – 2V & 351 c.i.d. 4V – man. trans – to 12/73	1	DY 126		
XB,ZG	All	6 & 8 cyl. – from 1/74	1	DY 126		
XA,ZF	All	351 c.i.d. 4V – auto trans. – to 12/73	1	DY 122		
– – 12A120 – – FILTER – DISTRIBUTOR VACUUM CONTROL VALVE						
XA/B, ZF/G	All	351 c.i.d. – man trans.	1	C8AZ	12A120	A
– – 12224 – – CONNECTOR – DISTRIBUTOR VACUUM TUBE						
XA/B, ZF/G	All	6 cyl. – tube to distributor & carburettor	2	XA	12224	A
XB,ZG	All	6 cyl. – with A/C – tube to inlet manifold	1	XB	12224	A*
– – 12226 – – TUBE – DISTRIBUTOR VACUUM						
XA/B, ZF/G	All	17" long	1	XA	12226	B
XA/B, ZF/G	All	22½" long	1	XA	12226	A
XA/B, ZF/G	All	26½" long	1	XA	12226	C
XA/B, ZF/G	All	Bulk roll – 50 ft. – cut to suit	a/r	KW 7A		
– – 12259 – – KIT – SPARK PLUG WIRES						
XA/B, ZF/G	All	6 cyl	1	WR 3802		
XA/B, ZF/G	All	8 cyl.	1	WR 3809		
– – 12282/7 – – WIRE – SPARK PLUG						
XA/B, ZF/G	All	6 cyl. – no. 1 cyl. (not serviced – order components)	1	C5DF	12286	C
XA/B, ZF/G	All	6 cyl. – no. 2 cyl.	1	C5DF	12283	C
XA/B, ZF/G	All	6 cyl. – no. 3 cyl.	1	C5DF	12284	C
XA/B, ZF/G	All	6 cyl. – no. 4 cyl.	1	C5DF	12287	C
XA/B, ZF/G	All	6 cyl. – no. 5 cyl. (not serviced – order components)	1	C5DF	12282	C
XA/B, ZF/G	All	6 cyl. – no. 6 cyl (not serviced – order components)	1	C5DF	12285	C
– – 12289 – – INSULATOR – CIRCUIT BREAKER						
XA/B, ZF/G	All	With electric windows and power tailgate	1	C5AZ	12289	A
– – 12297 – – SEPARATOR – IGNITION CABLE						
XA/B, ZF/G	All	Cable separating	a/r	B6A	12297	A
XA/B, ZF/G	All	Cable retaining	a/r	B8Q	12298	A
– – 12298 – – WIRE ASSY. – IGNITION COIL TO DISTRIBUTOR						
XA/B, ZF/G	All		1	D4HZ	12298	A
– – 12405 – – SPARK PLUG						
XA/B, ZF/G	All	6 cyl. 1V – individual	6	ABF 42		
XA/B, ZF/G	All	6 cyl. 1V – set	1	ABF 42 SET 6		
XA,ZF	All	6 cyl. 2V – individual	6	ABF 32		
XA,ZF	All	6 cyl. 2V – set	1	ABF 32 SET 6		
XA/B, ZF/G	All	8 cyl. – individual	8	AAF 32		
XA/B, ZF/G	All	8 cyl. – set	2	AAF 32 SET 4		

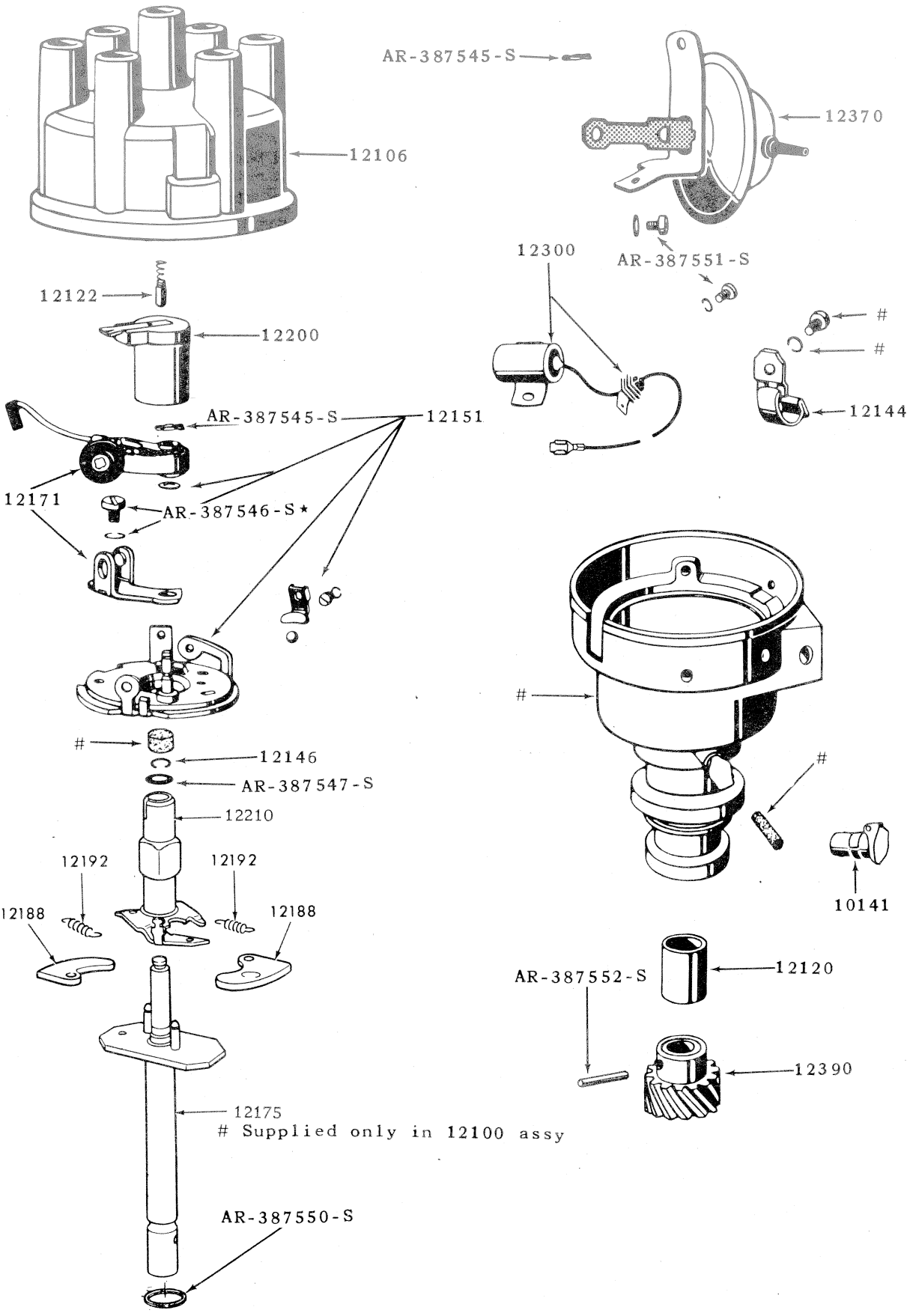

DISTRIBUTOR 6 CYLINDER BOSCH TYPE

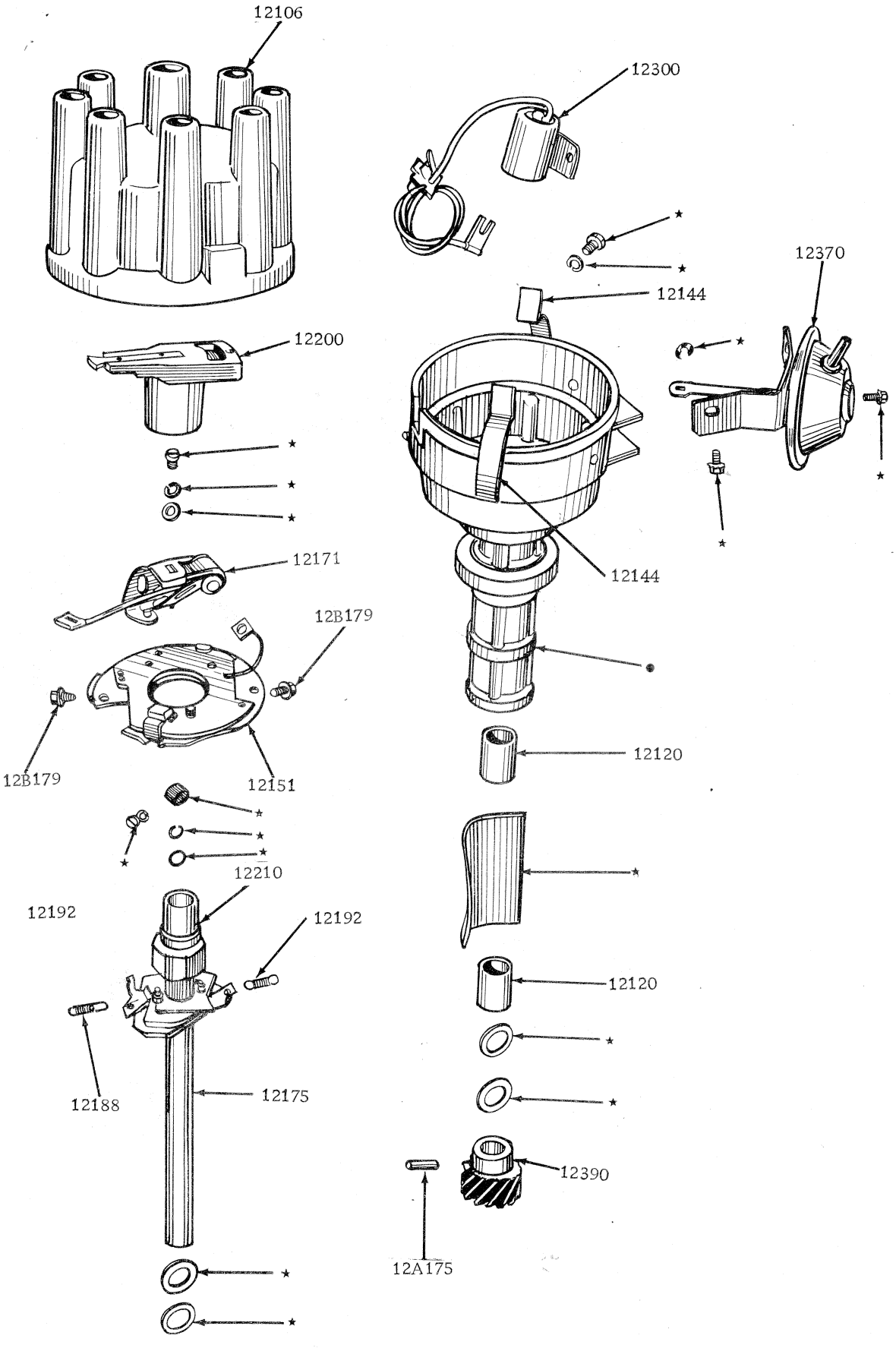

• SUPPLIED IN 12100 ASSY ONLY

DISTRIBUTOR 8 CYLINDER BOSCH TYPE

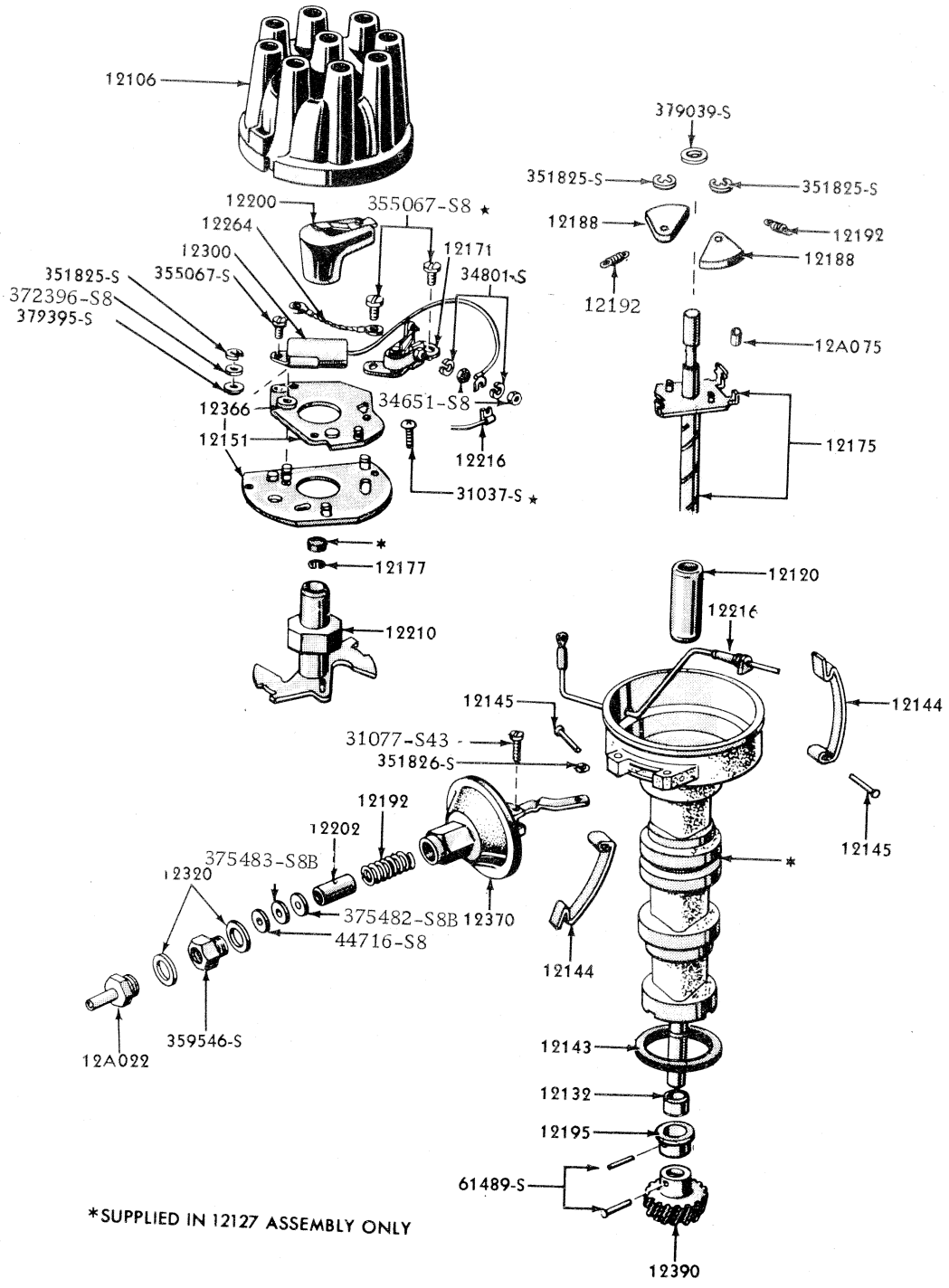

*SUPPLIED IN 12127 ASSEMBLY ONLY

DISTRIBUTOR 8 CYLINDER MOTORCRAFT TYPE

MODEL	BODY TYPE	REMARKS	UNIT	PART NUMBER		
– – 13007 – – BULB ASSY. – HEADLAMP SEALED BEAM						
XA/B	All	50/75 watt	2	ASU 3		
XA	54B	OSO G 6001/2	2	72DA	13007	AAOSO
ZF/G	All	Double filament	2	ASU 4		
ZF/G	All	Single filament	2	ASU 5		
– – 13008 – – LAMP ASSY. – HEAD – LESS WIRING						
XA	All	R.H.	1	XA	13008	AA
ZF	All	R.H.	1	ZF	13008	AA
XB	All	R.H.	1	XB	13008	A
ZG	All	R.H.	1	ZG	13008	A
XA	All	L.H.	1	XA	13035	AA
ZF	All	L.H.	1	ZF	13035	AA
XB	All	L.H.	1	XB	13035	A
ZG	All	L.H.	1	ZG	13035	A
– – 13007 – – BULB – QUARTZ HALOGEN DRIVING LIGHT						
XA/B	All		2	XB	13007	GLB*
– – 13015 – – RING – HEADLAMP BULB RETAINER						
XA/B	All		2	71BG	13015	AA
ZF/G	All		4	C5GY	13015	A
– – 13021 – – NUT – HEADLAMP ADJUSTING						
XA/B, ZF/G	All		8	D3AZ	13021	A
– – 13A024 – – KIT – HEADLAMP DIMMER SWITCH INSTALLATION						
XA,ZF	All		1	SW 263		
XA,ZF	All	Screw No. 10 – 16 – switch to dash panel – O.N.R.	2	377834 S101		
– – 13031 – – SPRING – HEADLAMP ADJUSTING						
XA/B, ZF	All		2/4	ARC6DB	13031	A
ZG	All		4	ZG	13031	A
– – 13032 – – SCREW – HEADLAMP ADJUSTING						
XA/B, ZF/G	All		a/r	XA	13032	A
– – 13035 – – LAMP ASSY. – HEAD – LESS WIRING (REFER 13008)						
– – 13052/3 – – DOOR HEADLAMP (REFER 13064)						
– – 13064 – – DOOR – HEADLAMP						
ZF	All	R.H.	2	ZF	13064	C
ZF	All	L.H.	2	ZF	13064	D
– – 13076 – – WIRE ASSY. – HEADLAMP LEAD						
XA/B	All	To 12/74	2	XA	13076	AA
ZF/G	All	To 9/74	2	ZF	13076	AA
ZG	All	From 9/74 to 12/74	2	ZG	13076	A
– – 13088 – – CLIP – HEADLAMP RETAINING RING – ANCHOR						
ZF/G	All		4	C5GY	13088	B
– – 13093 – – SCREW – HEADLAMP ADJUSTING						
XA/B	All		4	XA	13093	AA
– – 13099/13101 – – HOUSING ASSY. – HEADLAMP						
XA	All	R.H.	1	XA	13099	AA
XB	All	R.H.	1	XB	13099	A
ZF	All	R.H.	1	ZF	13099	AA
ZG	All	R.H.	1	ZG	13099	A
XA	All	L.H.	1	XA	13101	AA
XB	All	L.H.	1	XB	13101	A
ZF	All	L.H.	1	ZF	13101	AA
ZG	All	L.H.	1	ZG	13101	A

MODEL	BODY TYPE	REMARKS	UNIT	PART NUMBER		
– – 13118/9 – – RING ASSY. – HEADLAMP						
XA	All		2	XY	13118	B
XB	All	R.H.	1	XB	13118	A
XB	All	L.H.	1	XB	13118	B
ZF/G	All	R.H. – high beam	1	C5GY	13118	C
ZF/G	All	R.H. – low beam (ring only)	1	C5GY	13118	D
ZF/G	All	L.H. – high beam	1	C5GY	13119	C
ZF/G	All	L.H. – low beam (ring only)	1	C5GY	13119	D
– – 13200/1 – – LAMP ASSY. – PARKING (ALSO REFER GROUP 13206/7)						
XB	All	R.H.	1	XB	13200	A
XB	All	L.H.	1	XB	13201	A
– – 13202/3 – – LENS ASSY. – PARKING LAMP (REFER 13208/9)						
– – 13206/7 – – BODY – PARKING LAMP (ALSO REFER GROUP 13200/1)						
XA,ZF	All	R.H.	1	XA	13206	AA
ZG	All	R.H.	1	ZG	13206	A
XA,ZF	All	L.H.	1	XA	13207	AA
ZG	All	L.H.	1	ZG	13207	AA
XA,ZF	All	Nut, park light to fender	8	45262 S2		
– – 13208/9 – – LENS ASSY. – PARKING LAMP						
XA,ZF	All	R.H.	1	XA	13208	B
ZG	All	R.H.	1	XA	13208	B
XB	All	R.H.	1	XB	13208	A
XA,ZF	All	L.H.	1	XA	13209	B
ZG	All	L.H.	1	XA	13209	B
XB	All	L.H.	1	XB	13209	A
XA, ZF	All	Screw – No. 8 – recess – att. 13202/3 to 13206/7	8	56003 S		
XA,ZF	54,71	Screw, lens to body – No. 8 – 18 x ¾"	14	377924 S36		
XA	54, 66, 78	Screw, lens to body – No. 8 – 18 x ¾"	8	377924 S36		
– – 13210/1 – – GASKET – PARKING LAMP LENS						
XA, ZF/G	All		2	XA	13211	AA
– – 13305 – – HANDLE & SHANK ASSY. – TURN SIGNAL SWITCH						
XA,ZF	54D,E,G,H, 65D,H, 71D		1	XW	13305	AP
– – 13318 – – CAM – TURN SIGNAL TURN OFF						
XB,ZG	All		1	XB	13318	A
– – 13328/9 – – LENS REAR TURN INDICATOR LAMP						
XA	66, 71, 78	R.H. – to 12/72	1	XA	13328	A
XA/B	66, 71, 78	R.H. – from 1/73	1	XA	13328	B
XA	66, 71, 78	L.H. – to 12/72	1	XA	13329	A
XA/B	66, 71, 78	L.H. – from 1/73	1	XA	13329	B
– – 13341 – – SWITCH – MOUNTING PLATE ASSY. – TURN SIGNAL CONTROL						
XA,ZF	All		1	XY	13341	A
XB,ZG	All		1	XB	13341	A
– – 13350 – – FLASHER ASSY. – TURN SIGNAL						
XA/B, ZF/G	All	Exc when trailer wiring fitted	1	XA	13350	AA
XA/B, ZF/G	All	W/trailer wiring	1	XR	13350	A
– – 13A350 – – SWITCH ASSY. – HAZARD WARNING						
XB,ZG	All		1	72DA	13A350	AAOSO
– – 13351 – – BRACKET – TURN SIGNAL FLASHER MOUNTING						
XA/B, ZF/G	All	To 5/74	1	V 388355 S2		
XB,ZG	All	From 5/74	1	B5A	13351	A
– – 13A382 – – SOCKET ASSY. – TURN INDICATOR LAMP						
XA/B, ZF/G	All		2	3034E	13A382	A

MODEL	BODY TYPE	REMARKS	UNIT	PART NUMBER	
– – 13404/5 – – LAMP ASSY. – REAR (ALSO REFER GROUP 13434/5)					
XA	54		2	XA 13404	B
XB	54	R.H.	1	XB 13404	A
XB	54	L.H.	1	XB 13405	A
XA	65		2	XA 13404	CA
XB	65	R & L.H.	2	XB 13404	B
ZF	All	R.H.	1	ZF 13404	B
ZF	All	L.H.	1	ZF 13405	B
ZG	All	R.H.	1	ZG 13404	A
ZG	All	L.H.	1	ZG 13405	A
– – 13411 – – SOCKET ASSY. – REAR & STOP LAMP					
XA/B, ZF/G	54, 65	To 12/74	4	120E 13411	A
XB,ZG	54, 65	From 12/74	4	XB 13411	A
– – 13412 – – SOCKET & WIRING ASSY. – LICENCE LAMP					
XA/B, ZF/G	54, 65		1	XY 13412	A
XA/B	66, 71,78		1	ARC6DF 13412	A
– – 13A415 – – SHIELD – REAR LAMP					
ZF/G	54		2	ZF 13A415	A
– – 13420 – – PAD – REAR LAMP MOUNTING (ALSO REFER 13461)					
XA	54		2	XA 13420	AA
XB	54		2	XB 13420	A
XB	65		2	XB 13420	B
XA/B	66, 71, 78		2	XA 13420	C
ZF	All		6	ZF 13420	AA
ZG	All		3	ZF 13420	AA
– – 13434/5 – – BODY ASSY. – REAR LAMP (ALSO REFER GROUP 13404/5)					
XA/B	66, 71, 78	R.H.	1	XA 13434	BA
ZF/G	All	R.H.	1	ZF 13434	AA
XB	54	R.H.	1	XB 13434	A
XA/B	66, 71, 78	L.H.	1	XA 13435	BA
ZF/G	All	L.H.	1	ZF 13435	AA
XB	54	L.H.	1	XB 13435	A
– – 13450/1 – – LENS – REAR LAMP					
XA	54		2	XA 13450	D
XA	65		2	XA 13A497	CA
XA	66, 71, 78	R.H. – to 12/72	1	XA 13450	B
XA/B	66, 71, 78	R.H. – from 1/73	1	XA 13450	C
ZF	All	R.H.	1	ZF 13450	A
XB	54	R.H.	1	XB 13450	A
XB	65	R& L.H.	2	XB 13450	B
ZG	All	R.H.	1	ZG 13450	AC
XA	66, 71, 78	L.H. – to 12/72	1	XA 13451	B
XA/B	66, 71, 78	L.H. – from 1/73	1	XA 13451	C
ZF	All	L.H.	1	ZF 13451	A
XB	54	L.H.	1	XB 13451	A
ZG	All	L.H.	1	ZG 13451	AC
ZF	All	Centre	1	ZF 13A497	C
ZG	All	Centre	1	ZG 13A497	B
– – 13460/1 – – GASKET – REAR LAMP LENS					
XA	54		2	XA 13461	AA
XB	54		2	XB 13461	A
XA/B	66, 71, 78	Brake lamp	2	XA 13460	B
XA/B	66, 71, 78	Turn signal	2	XA 13460	C
ZF/G	All		2	ZF 13461	AA

MODEL	BODY TYPE	REMARKS	UNIT	PART NUMBER		
– – 13464/6 – – BULB ASSY. – LAMP						
XA/B, ZF/G	All	Courtesy lamp	1	AR206E	13730	A
XA/B, ZF/G	54C,D,E,G,H, 65B,H	Courtesy lamp	2	B6A	13730	A
XA/B, ZF/G	All	(1) Used alternator (1) oil (1) inst. panel (1) dual brake (2) minor gauge illum GT	6	69EB	13464	AA
XB	54B	Bulb assy. – 12V x 3W – speedometer – police OSO F6063 only	2	69EB	13464	AA
ZG	All	Bulb – 12V x 21/5 watt DC base tail and stop lamp	2	69AG	13464	AA
XA/B, ZF/G	All	32 cp – 12V sc – front turn lamp	2	C3DZ	13466	A
XA,ZF	54, 65	32 cp – 12V sc – rear turn signal	2	C3DZ	13466	A
ZG	All	32 cp – 12V sc – rear turn signal	a/r	C3DZ	13466	A
ZG	All	Bulb – 12V x 21W	1	69AG	13466	BA
XA,ZF	54, 65	4 cp – 12V sc – luggage compt. lamp – to 3/73	1	C3AZ	13466	A
ZG	All	4 cp – 12V sc – rear lamps	4	C3AZ	13466	A
XA,ZF	All	12V 2 cp (1) glove compt. lamp and inst. panel	a/r	C3AZ	13466	B
XA/B, ZF/G	All	12V 1.9 cp – control selector dial auto trans floor shift	1	C1VY	13466	A
XA	54A,B,C,D,H, 65B,D,H	Tail & stop lamp	4	C3AZ	13466	C
XA	66A,B	Tail & stop lamp	2	C3AZ	13466	C
XA,ZF	All	Licence lamp	1	ARC0DF	13466	A
ZF	54G	Under dash courtesy lamp	2	ARC0DF	13466	A
XA,ZF	All	Luggage compartment lamp – from 3/73	1	ARC0DF	13466	A
XA/B, ZF/G	All	Park lamp	2	ARC0DF	13466	A
XA/B, ZF/G	All	Auto trans. – column shift selector illumination – heated backlite switch	1	69AG	13465	EA
XA,ZF	All	Except 54H, 65H – Japan – part of 72DA 15A500 AOSO	2	EJ	13730	AA
XA,ZF	54C,D,E,G,H	Ash tray illumination	1	109E	13712	A
XA/B, ZF/G	All	Clock illumination	1	XB	13712	A
– – 13472/3 – – LENS ASSY. – INNER (REFER 13A372/3)						
– – 13A472/3 – – LENS ASSY. – INNER						
ZF	All	R.H.	1	ZF	13A472	A
ZG	All	R.H.	1	ZG	13472	A
ZF	All	L.H.	1	ZF	13A473	A
ZG	All	L.H.	1	ZG	13473	A
– – 13480 – – SWITCH ASSY. – STOP LAMP						
XA/B, ZF/G	All		1	XA	13480	A
– – 13482 – – RELAY – STOP LAMP FAILURE INDICATOR						
XA/B, ZF/G	54		1	XY	13482	A
– – 13A495 – – SEAL – REAR LAMP						
XB	54		2	XB	13A495	A
– – 13A497/8 – – LENS – REAR LAMP (REFER 13450/1)						
– – 13A536 – – BEZEL ASSY. – REAR LAMP						
XA	54		2	XA	13A536	A
– – 13A554 – – PLATE – LICENCE LAMP SOCKET						
XA/B, ZF/G	54, 65, 71		1	XA	13A554	A
XA/B	66, 78		1	XA	13A554	B
– – 13A555 – – SEAL – REAR LAMP BEZEL						
XA	54		2	XA	13A555	A
– – 13B691 – – WIRE ASSY. – RHEOSTAT EARTH						
XA/B, ZF/G	All	Use with XA 13A701 AA	1	XA	13B691	A
– – 13A701 – – SWITCH ASSY. – RHEOSTAT CONTROL						
XA/B, ZF/G	All		1	XA	13A701	AA
– – 13712 – – BULB ASSY. (REFER GROUP 13464/6)						
– – 13713 – – SWITCH ASSY. – COURTESY LAMP						
XA/B, ZF/G	All		2/4	SW 442		
XA/B, ZF/G	All	Used luggage comp. – from 3/73	1	SW 442		

MODEL	BODY TYPE	REMARKS	UNIT	PART NUMBER	
– – 13A719 – – SOCKET & WIRE ASSY. – DOME LAMP					
XA/B, ZF/G	54, 65, 66	Centre	1	XA	13A719 AA
XA/B	71B,D	Rear	1	XA	13A719 BA
XA/B	71	Mid dome	1	XA	13A719 C
XA/B, ZF/G	54, 65	With sliding sun roof	1	C0DF	13A719 B
XA/B, ZF/G	54C,D,E,G,H, 65D,H	Roof side rear	1	XA	13A719 D
XA/B, ZF/G	54, 65	Luggage compt.	1	CJ	13A719 AA
ZG	All	South Africa only	1	ARC6DF	13A719 A
XB	71D	Rear dome	1	XB	13A719 A
– – 13B721 – – WIRING ASSY. – REAR DOOR COURTESY LAMP					
XA/B, ZF/G	All		2	CH	13B721 AA
– – 13K721 – – SWITCH ASSY. – PUSH PULL FOR ROOF MARKER LAMP					
XB	54	OSO F6065 police car – short reach type – not serviced – purchase from hella p/no. 4403	1	BV73DA	13K721 AAOSO
XB	54	OSO F 6065 police car – long reach type – not serviced – purchase from hella p/no. 4400	1	BV74DA	13K721 AAOSO
– – 13K724 – – SWITCH ASSY. – POWER TAILGATE					
XA	71	To 9/73	1	XA	13K724 AA
XA/B	71	From 9/73	1	XA	13K724 AB
– – 13728 – – SOCKET ASSY. – LAMP INSTRUMENT CLUSTER					
XA/B, ZF/G	All	Part of instrument cluster	a/r	71BB	13728 AA
XA/B, ZF/G	All	Part of instrument cluster wiring loom	a/r	XA	13728 A*
– – 13730 – – BULB ASSY. – DOME COURTESY LAMP (REFER 13465/6)					
– – 13A756 – – LAMP ASSY. – LUGGAGE COMPARTMENT					
XA,ZF	54C,D,E,G,H, 65	To 3/73	1	D0AZ	13A756 A
– – 13B756 – – WIRE ASSY. – LUGGAGE COMPARTMENT LAMP					
XA	54A,B,C,	Taxi kit – to 8/73	1	ARC6DB	13B756 A
– – 13776 – – LAMP ASSY. – INTERIOR REAR					
XA/B	71D		1	69EG	13776 AA
– – 13783 – – LENS – INTERIOR DOME LAMP					
XA/B, ZF/G	All		1	ARC6DB	13783 A
XA/B, ZF/G	54, 65	Sliding sun roof	2	XA	13783 A
– – 13787 – – BODY – INTERIOR LAMP					
XA/B, ZF/G	All		1	C60B	13787 A
XA,ZF	All	Screw – O.N.R.	4	51755 S8	
– – 13801/2 – – HORN & BRACKET ASSY.					
XA/B, ZF/G	All	High note	1	XY	13801 D
XA/B, ZF/G	All	Low note	1	XY	13802 D
XB	54B	High note – police OSO F6061	2	V73DA	13801 AA
XB	54B	Low note – police OSO F6061	2	V73DA	13802 AA
– – 13B801 – – WIRE ASSY. – HORN WIRE EXTENSION					
XA/B, ZF/G	All	With dual horns	1	XY	13801 D
– – 13K802 – – COVER ASSY. – HORN					
XA,ZF	All exc. 54H,65H	Black – corinthian grain	1	XA	13K802 AA1A
XA,ZF	All exc. 54H,65H	Saddle – corinthian grain	1	XA	13K802 AA1F
XA	All exc. 54H65H	Blue – corinthian grain	1	XA	13K802 BA1B
ZF	All	Blue – corinthian grain	1	XA	13K802 AA1B
XA	54D,65D,71D	Burgundy – corinthian grain	1	XA	13K802 BA1J
ZF	54G	Burgundy – corinthian grain	1	XA	13K802 AA1J
– – 13K805 – – SWITCH ASSY. – HORN CYCLE					
XB	54B	Police – OSO F6061	1	V73DA	13K805 AA
– – 13A823 – – PLATE – HORN SWITCH BRUSH					
XA,ZF	All	Inner	1	XA	13A823 B
XA,ZF	All	Outer	1	XA	13A823 AA

MODEL	BODY TYPE	REMARKS	UNIT	PART NUMBER		
– – 13853 – – RELAY ASSY. – HORN						
XB	54B	Police OSO F6061	1	V73DA	13853	AA
– – 13A875 – – RING – RUBBER HORN BLOWING						
XA/B	All	Rally pack	1	D1AZ	13A875	A
– – 13A875 – – SWITCH ASSY. – HORN CONTROL						
XB	54B	Police OSO F6061	1	V73DA	13A875	AA
– – 13879 – – BRACKET – DOME LAMP MOUNTING						
XA/B, ZF/G	All	With sliding sun roof	1	XA	13879	A
– – 13A891 – – INSULATOR – HORN BLOWING RING INNER CONTACT PLATE						
XA/B, ZF/G	All	.. ..	1	XA	13A891	AA

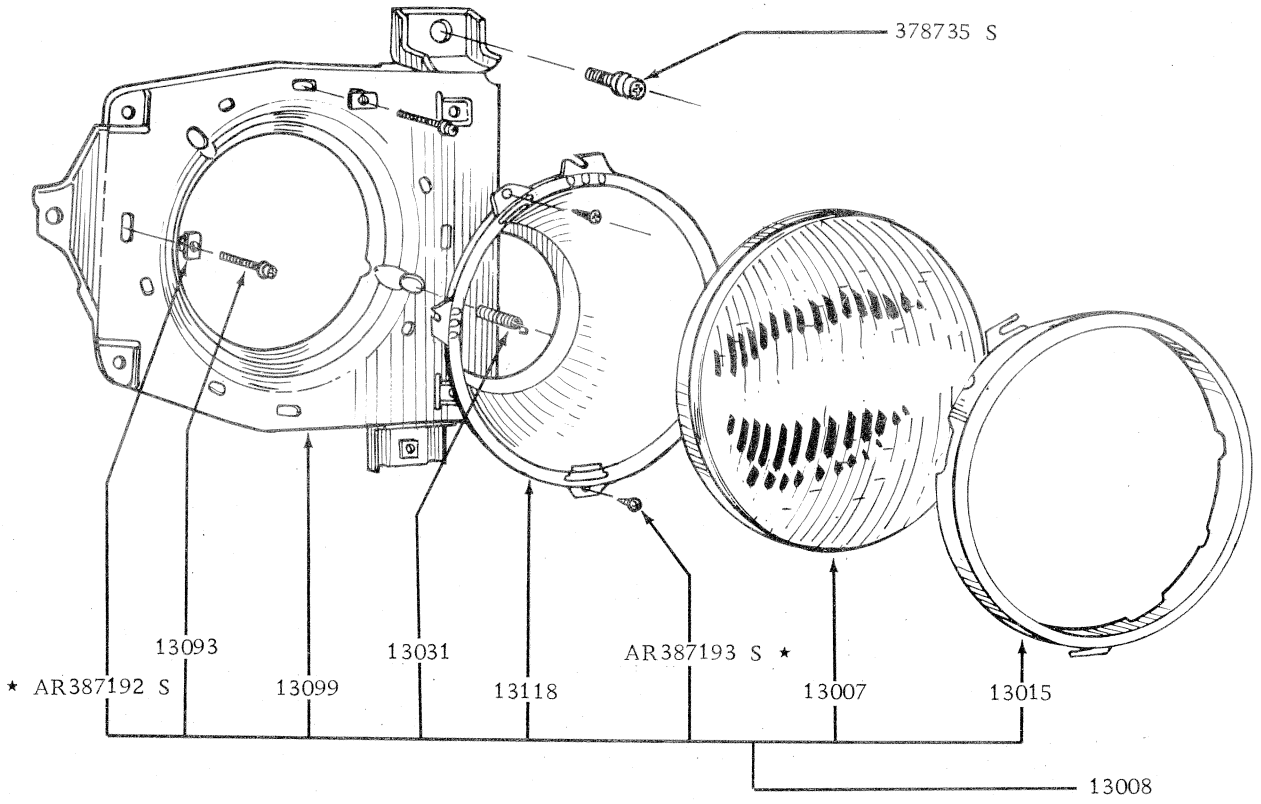

HEADLAMP - FALCON

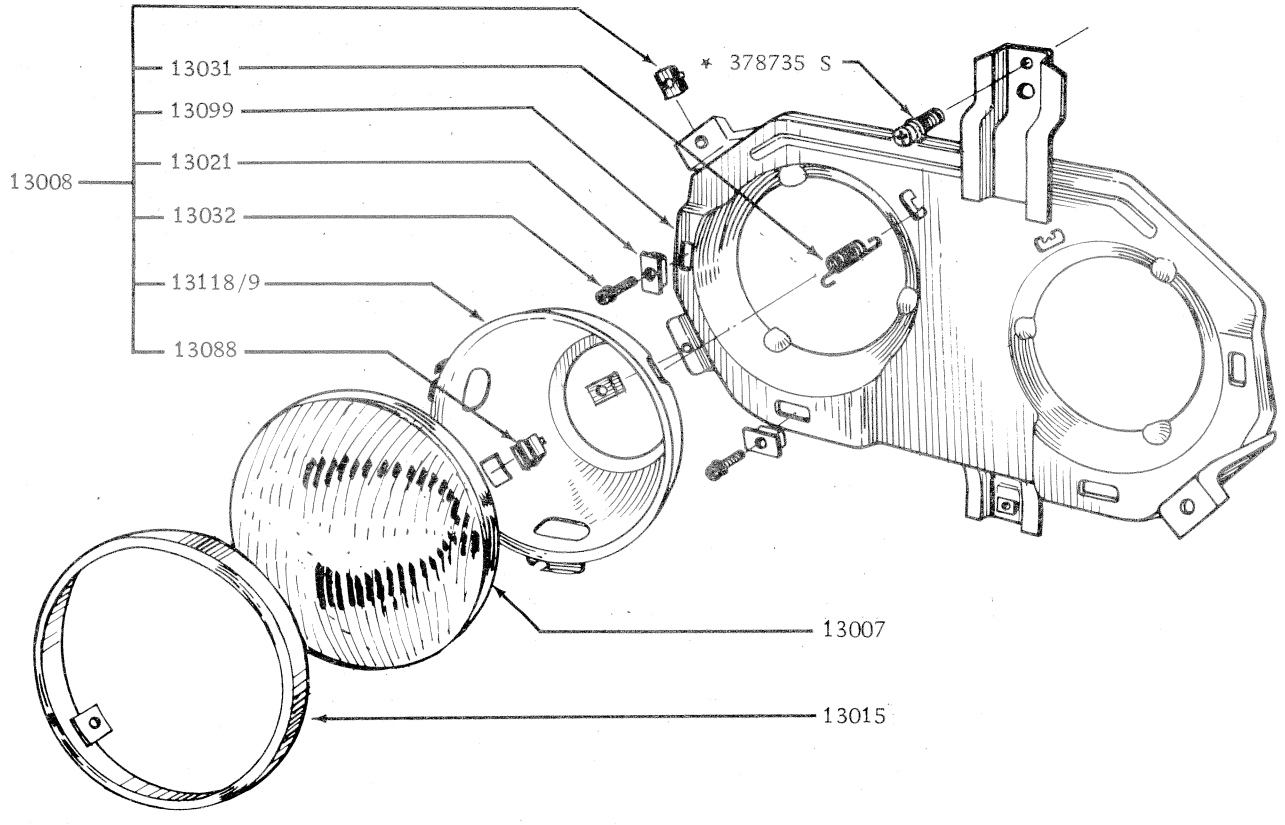

HEADLAMP - FAIRLANE

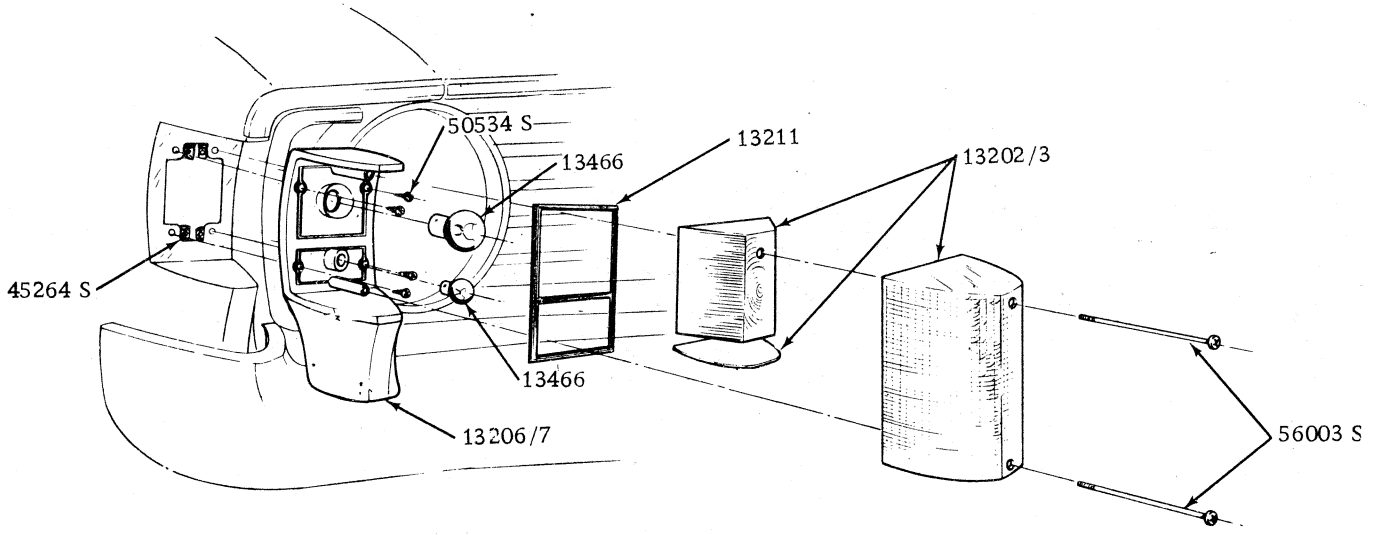

XA FALCON

PARKING LAMP

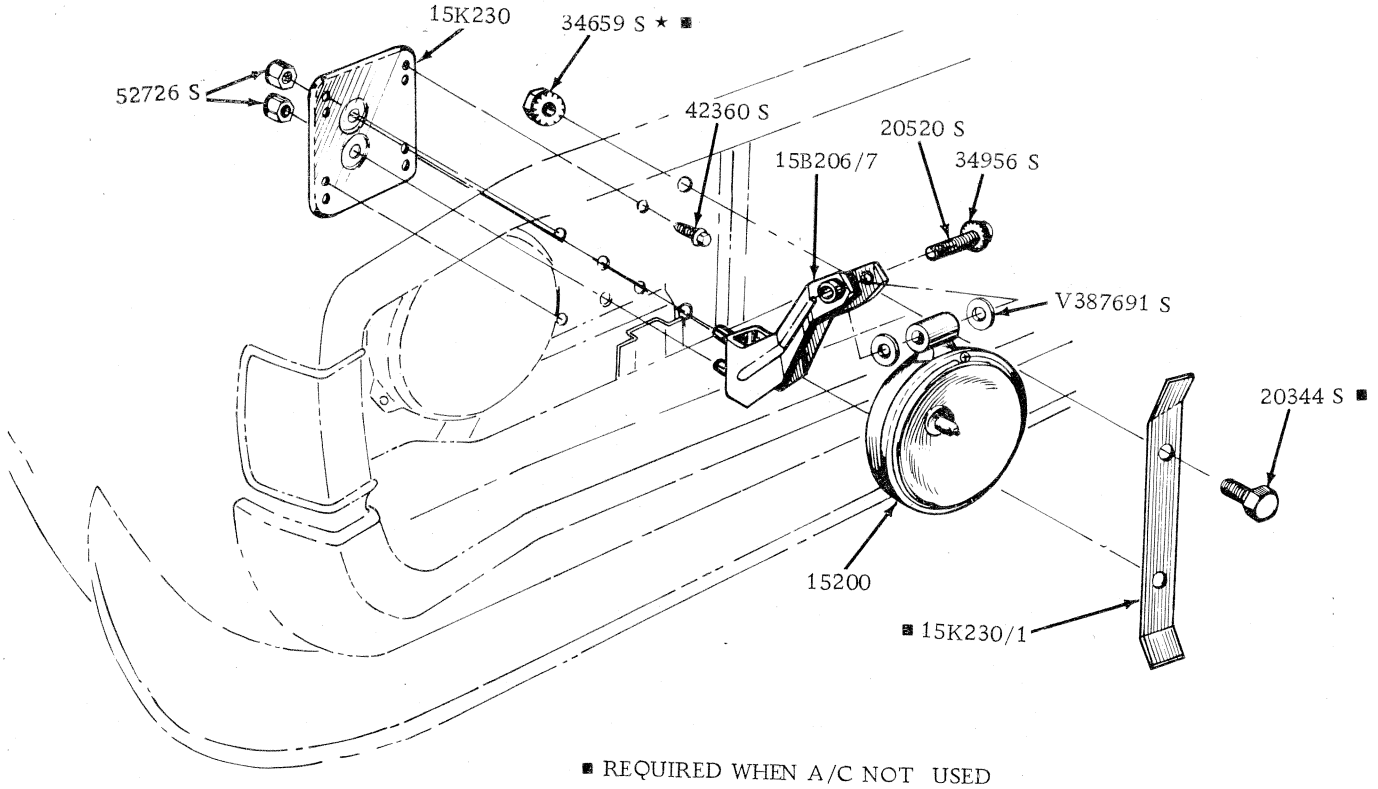

■ REQUIRED WHEN A/C NOT USED

E17 02 3

LONG RANGE DRIVING LAMPS

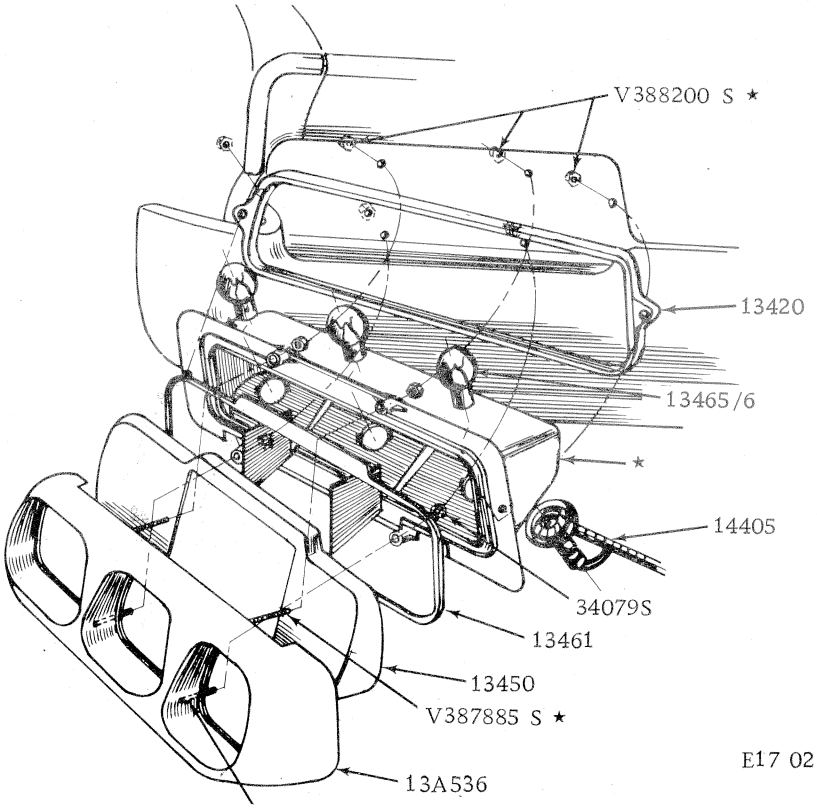

E17 02 1/5

XA SEDAN

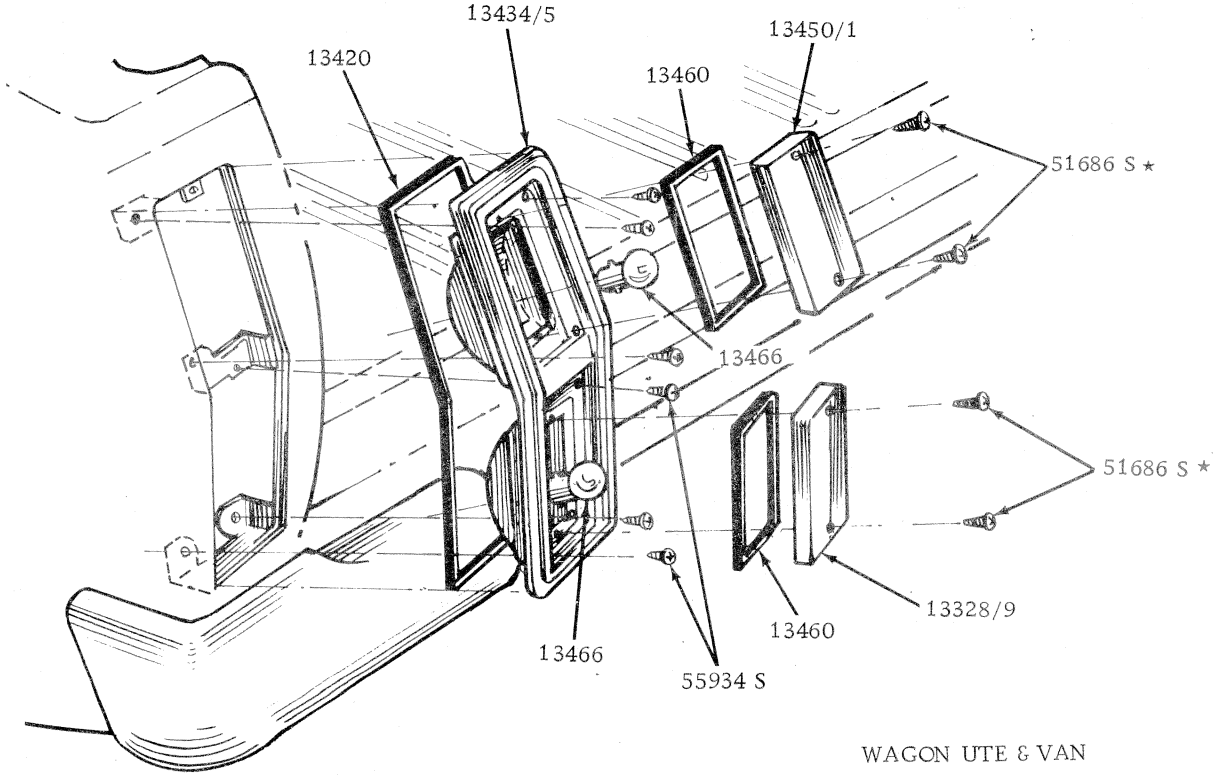

WAGON UTE & VAN

E17 02 01

LAMP ASSEMBLY REAR FALCON

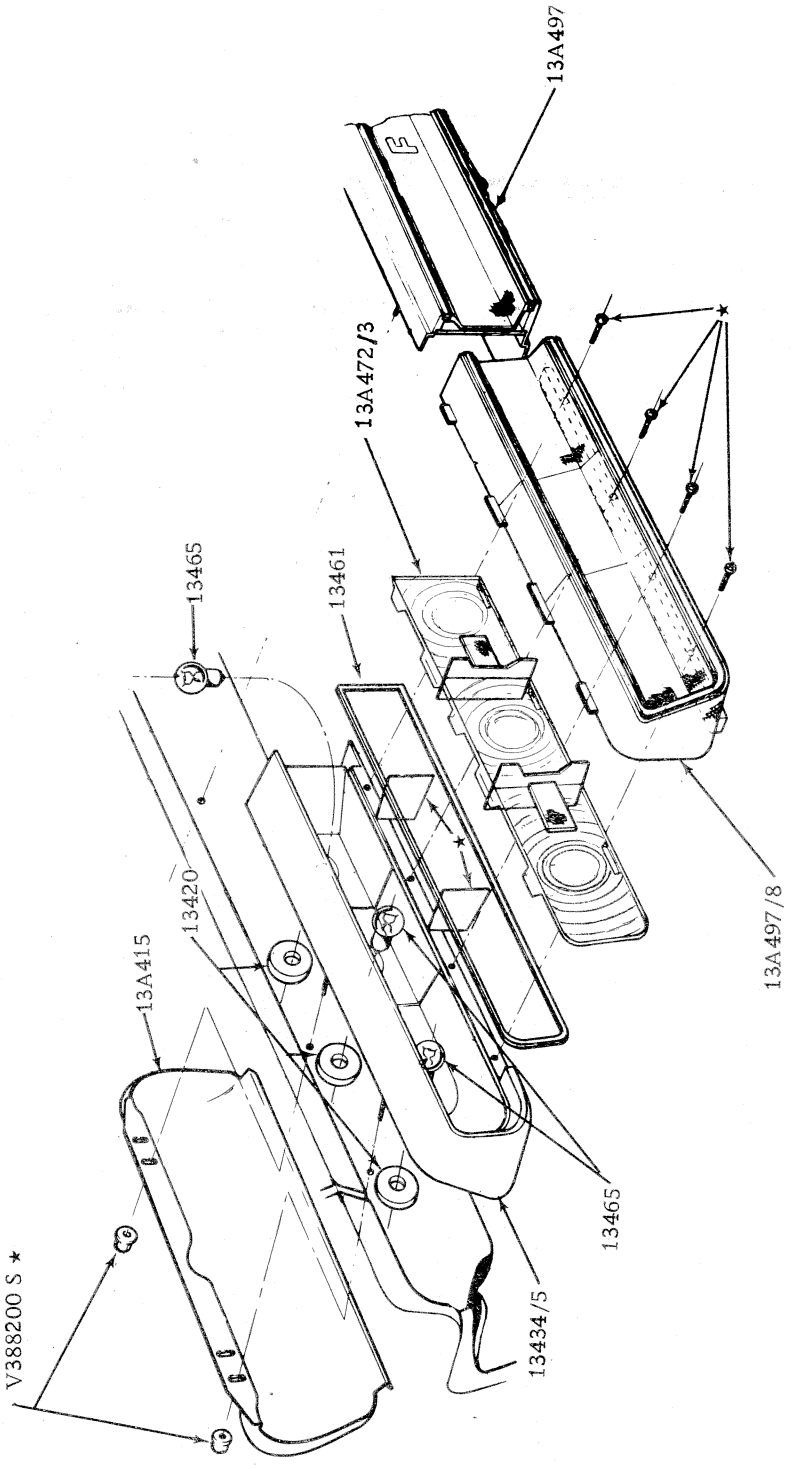

FAIRLANE

LAMP ASSEMBLY REAR

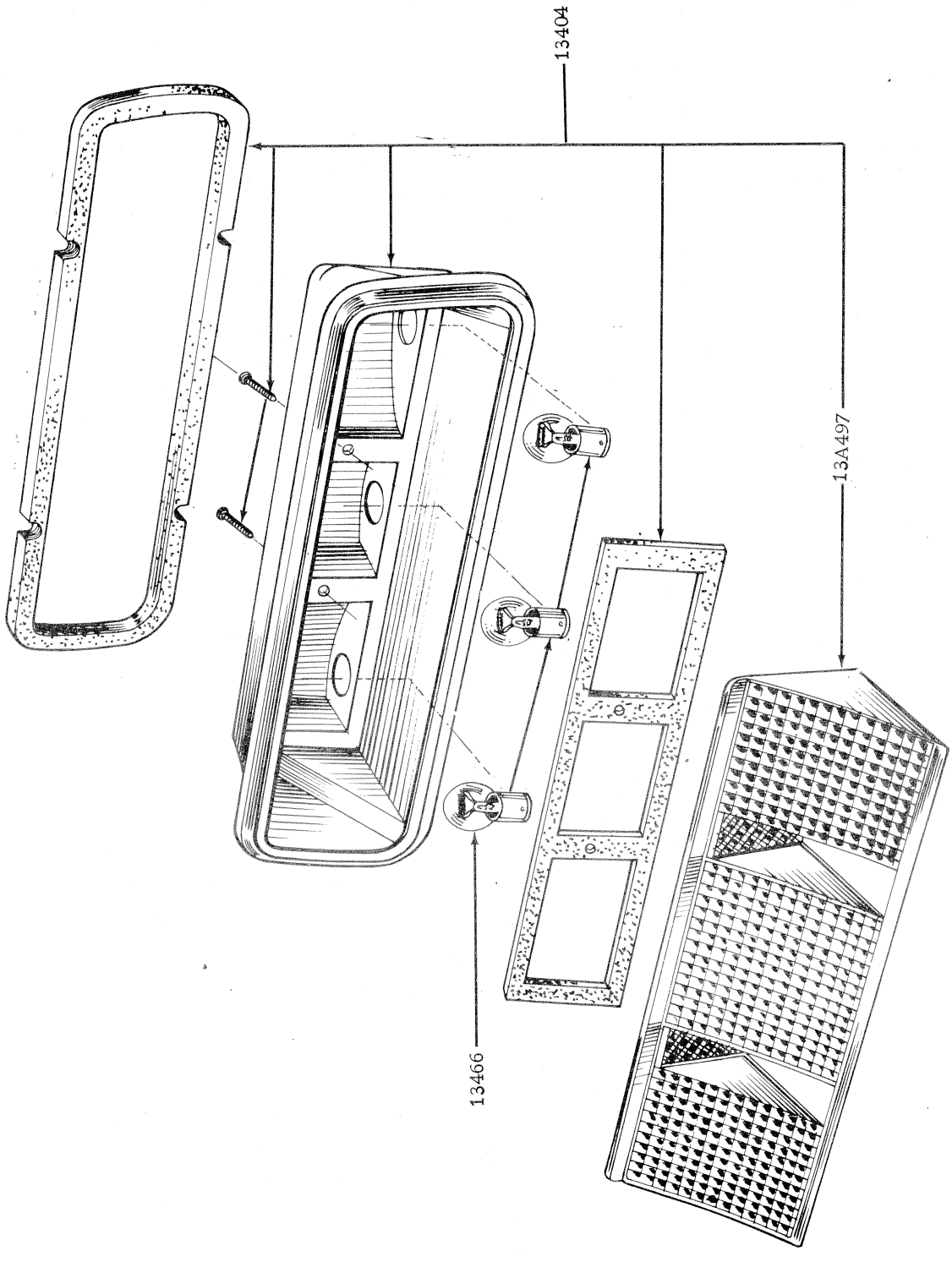

LAMP ASSEMBLY REAR FALCON BODY TYPE 65

XA FALCON

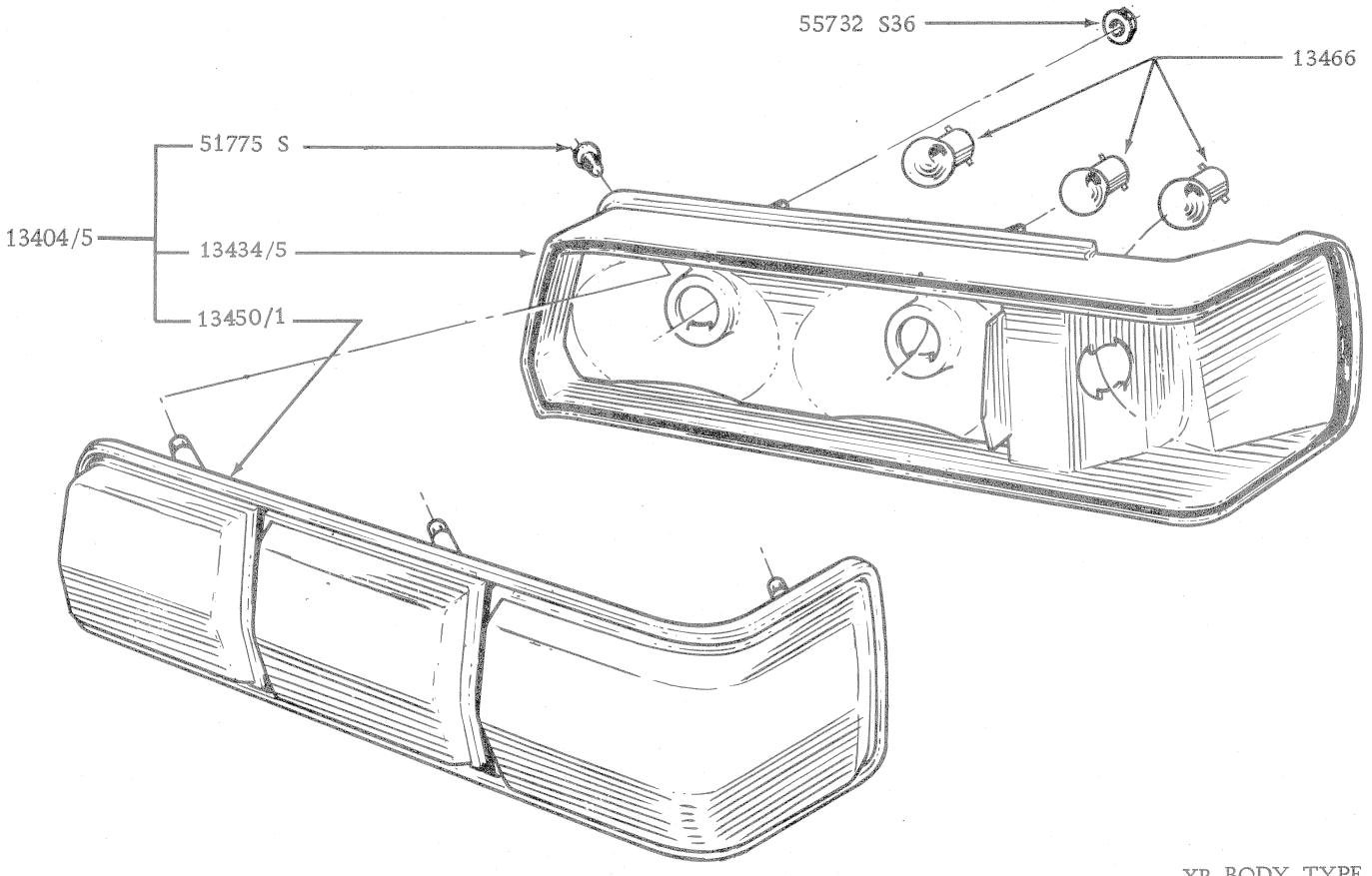

TAIL LAMP ASSEMBLY

XB BODY TYPE 54

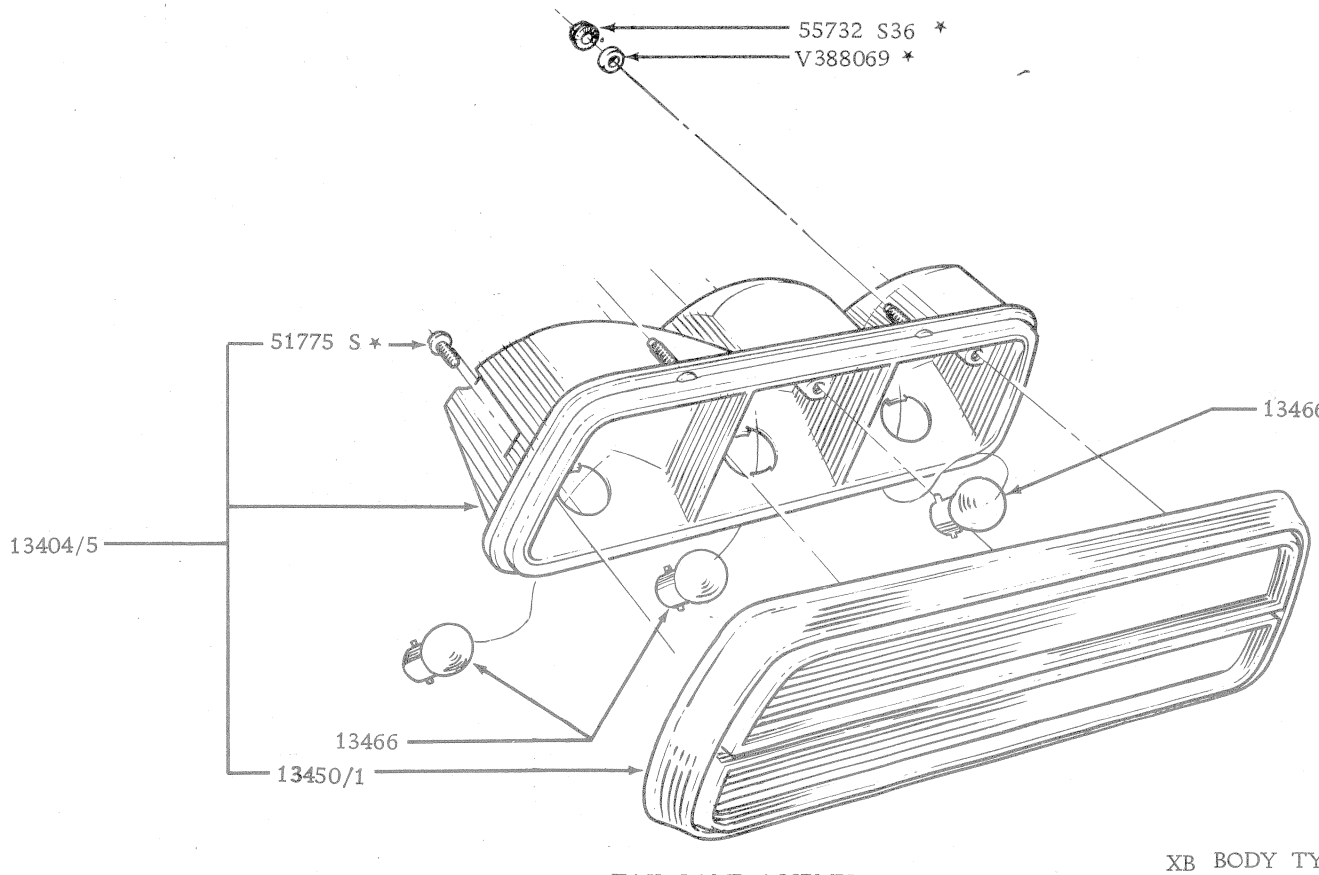

TAIL LAMP ASSEMBLY

XB BODY TYPE 65

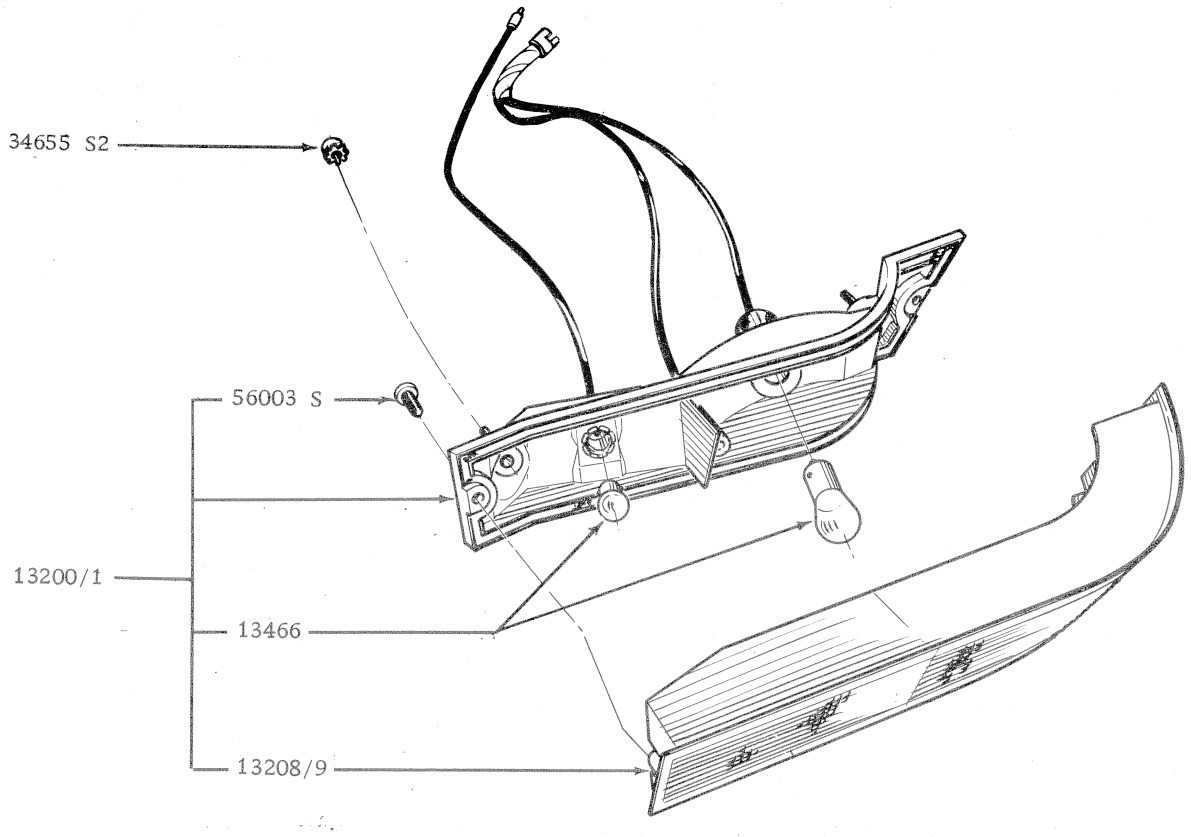

PARKING LAMP XB FALCON

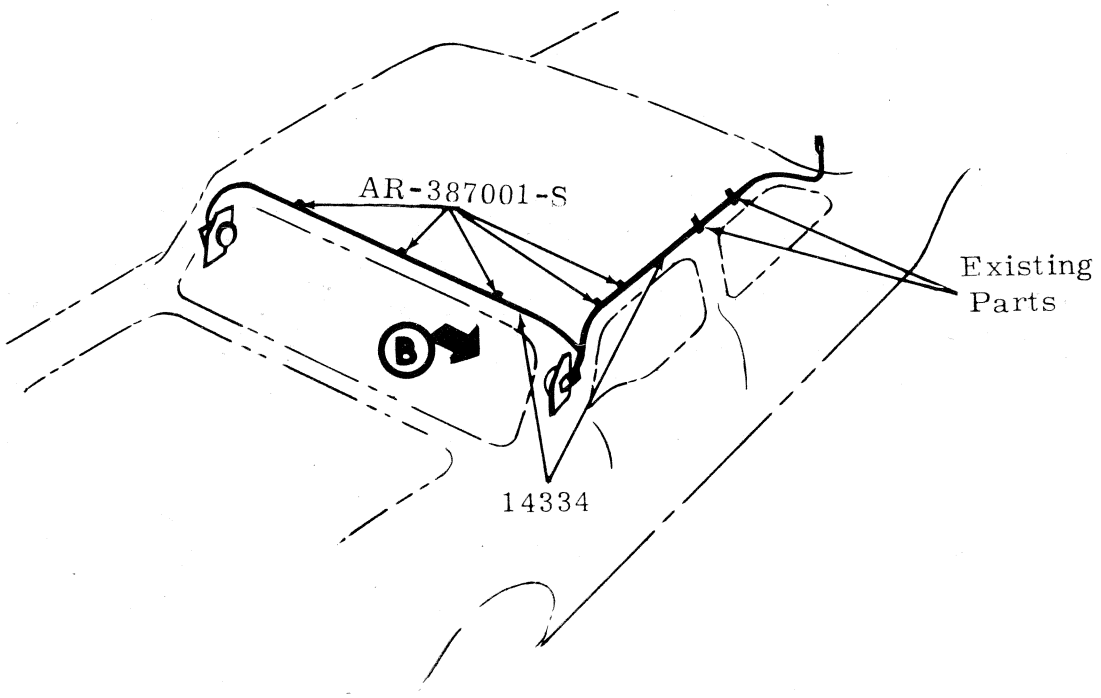

View B (both sides)

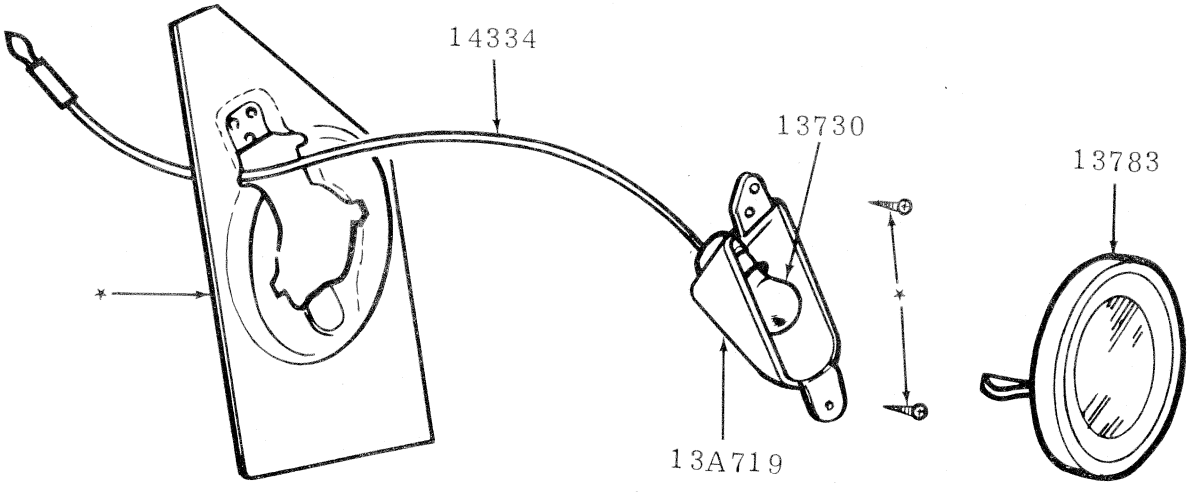

REAR DOME COURTESY LAMP BODY TYPE 54

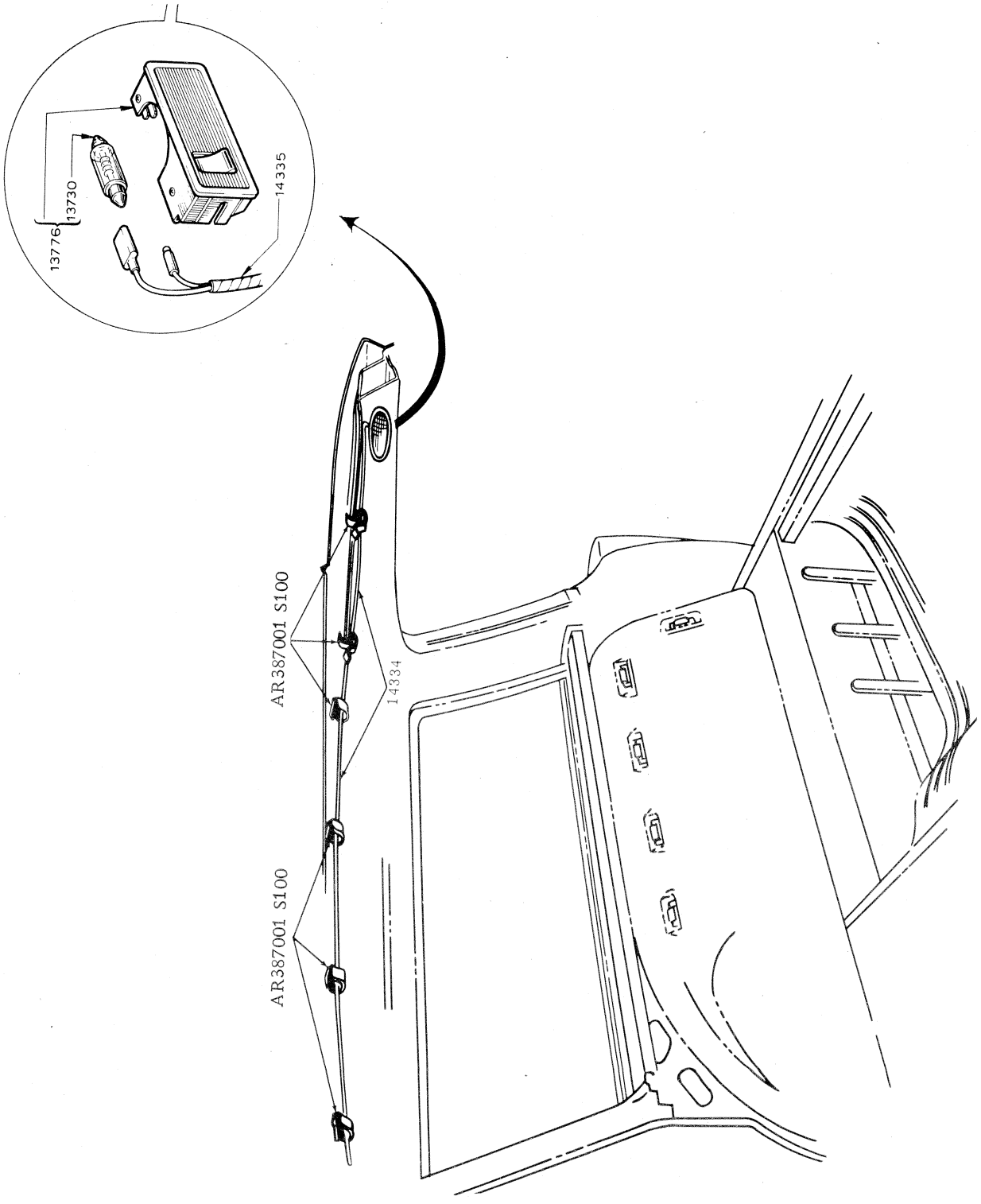

REAR COURTESY LAMP BODY TYPE 71

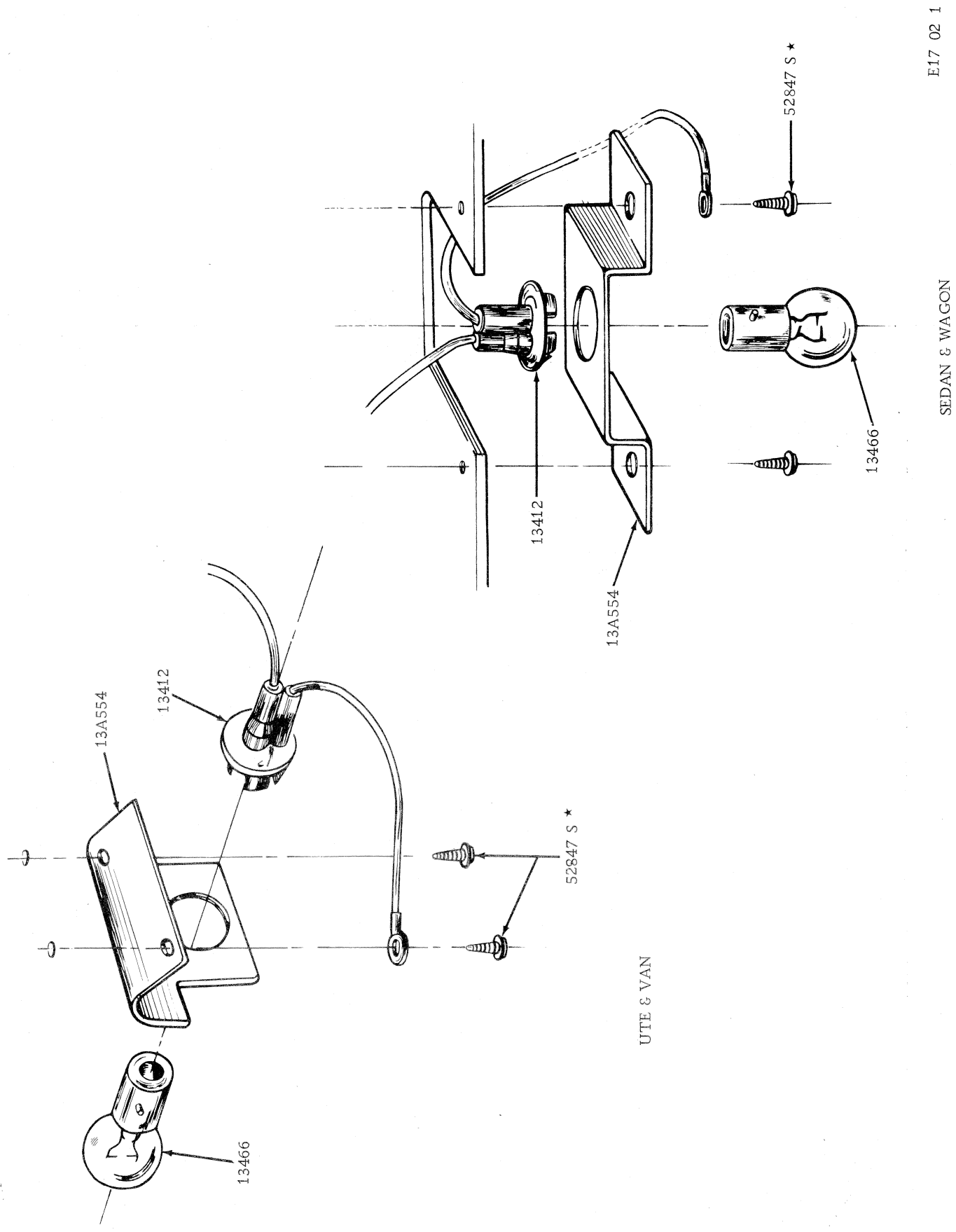

REAR LICENCE LAMP

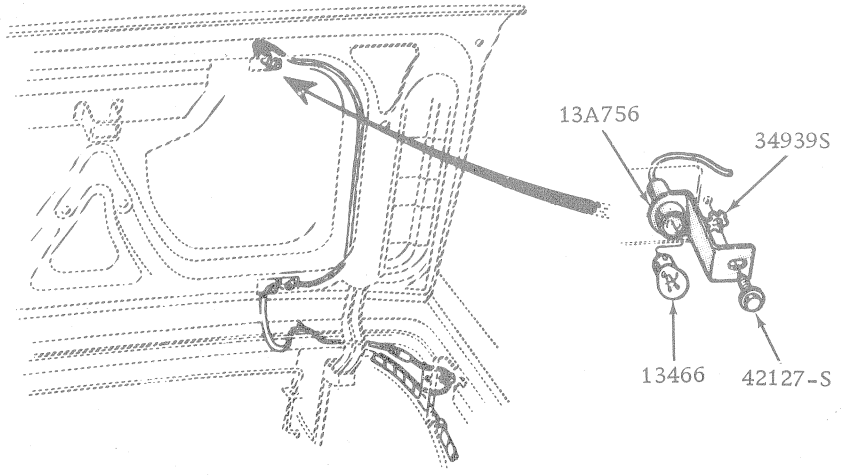

LUGGAGE COMPARTMENT LAMP

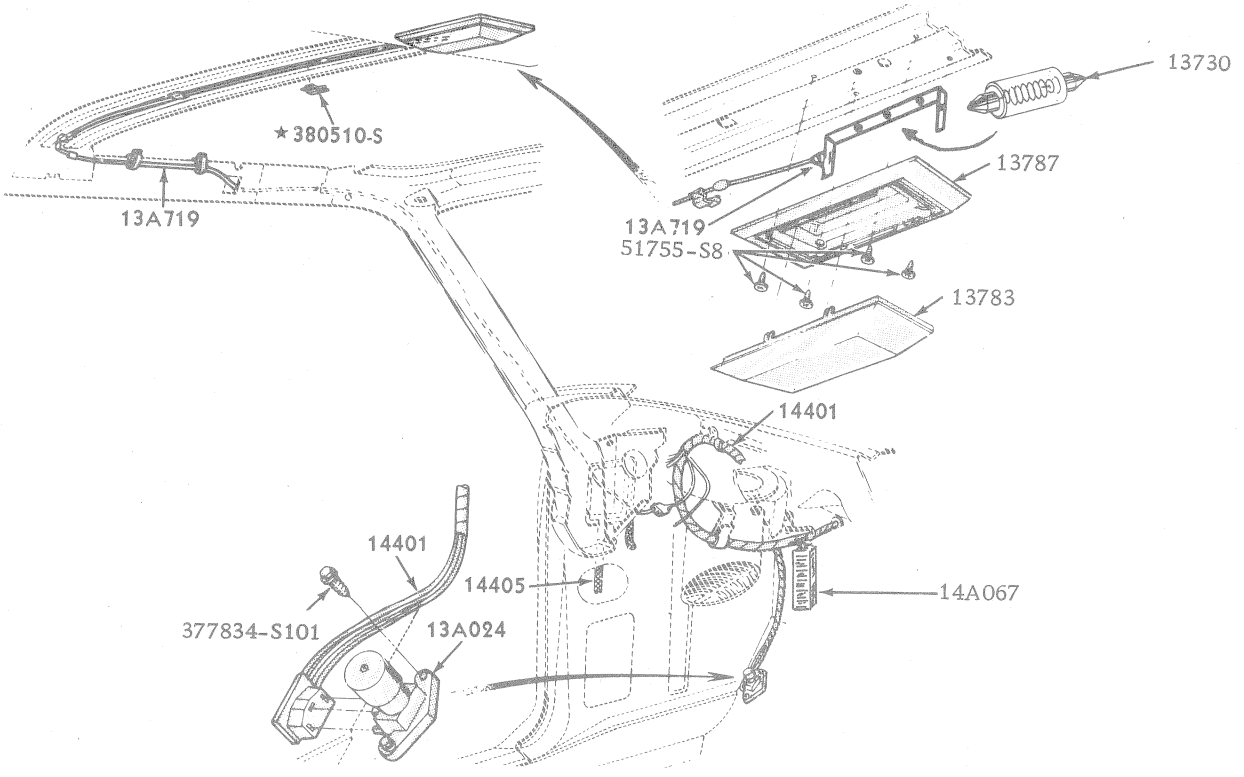

ROOF MOUNTED COURTESY LAMP, HEAD LAMP DIMMER SWITCH AND FUSE BOX

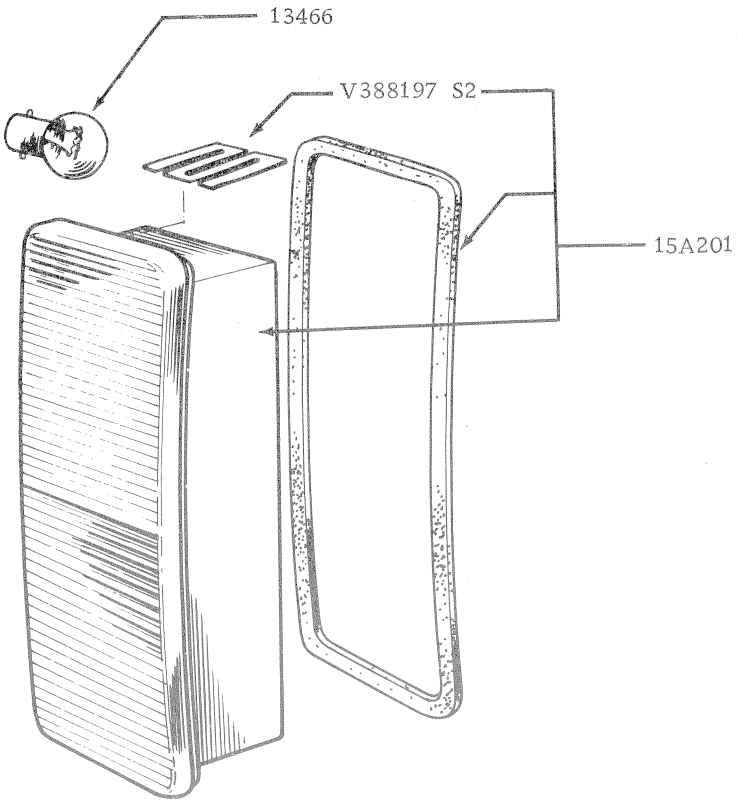

ONE PIECE TYPE

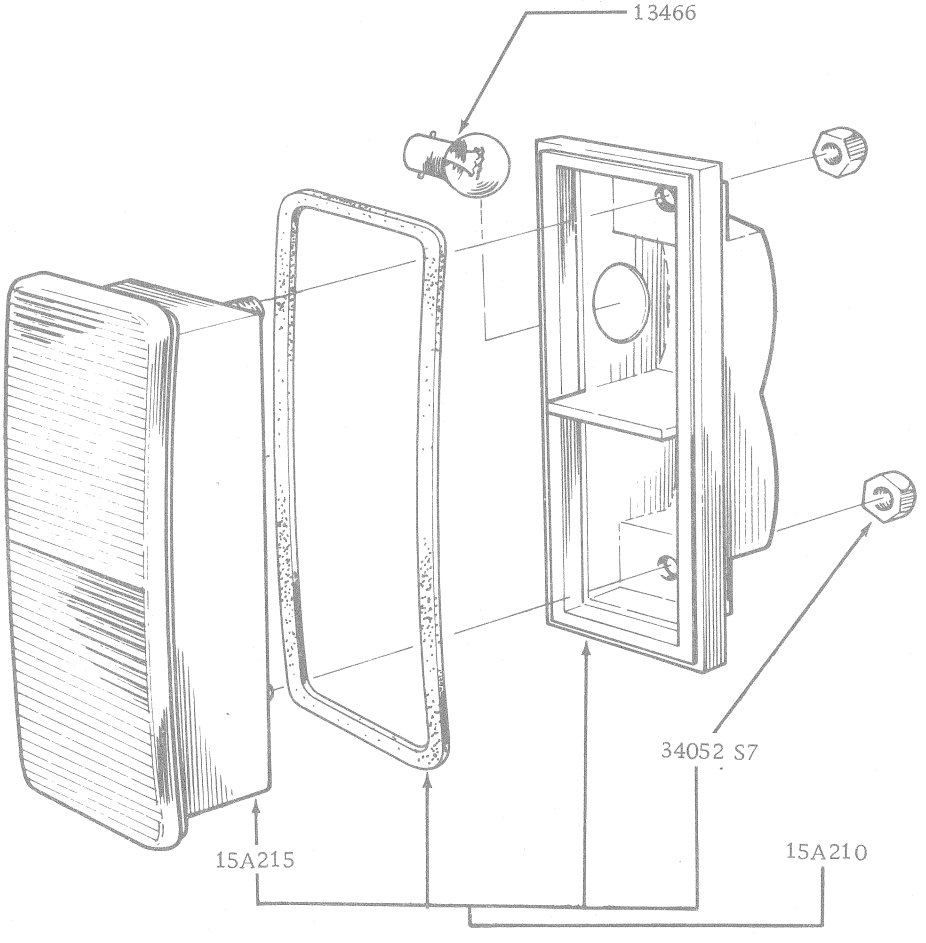

TWO PIECE TYPE

LAMP ASSY - BODY SIDE

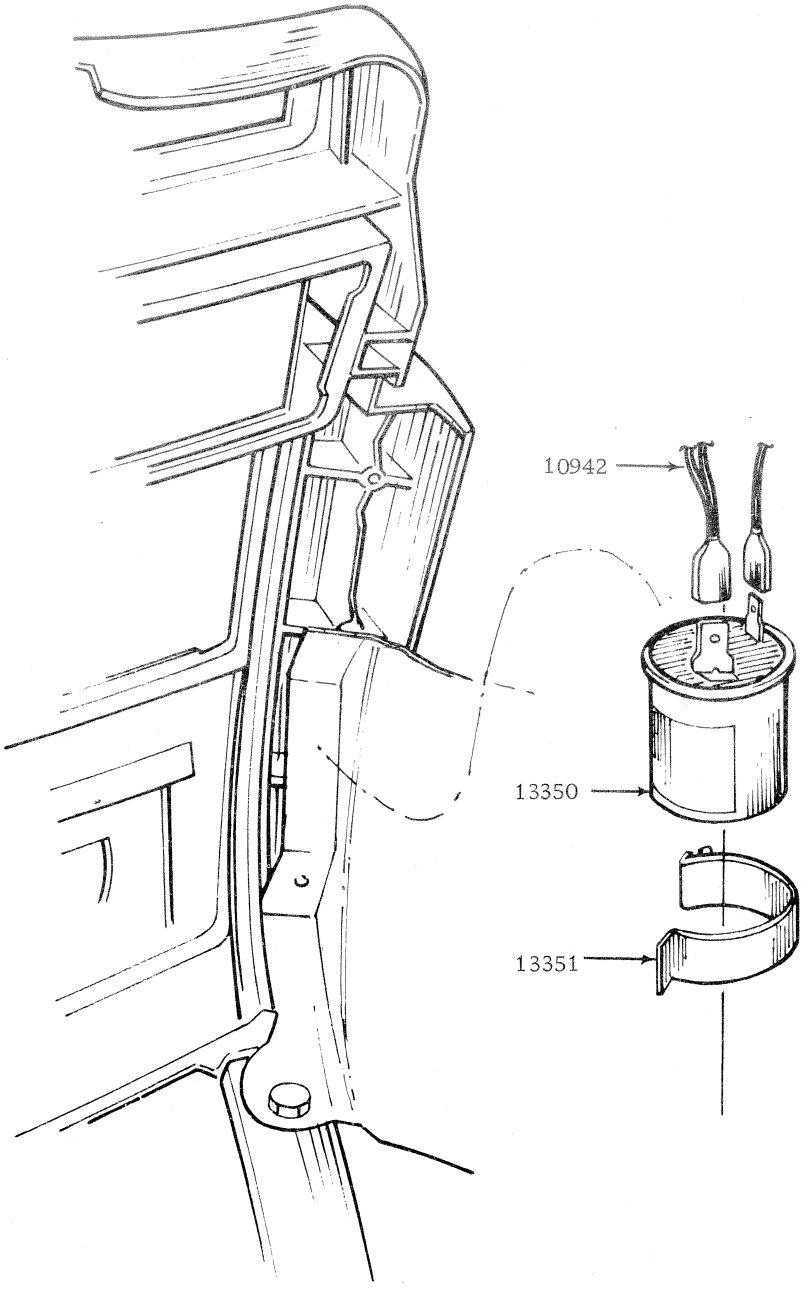

FLASHER INSTALLATION

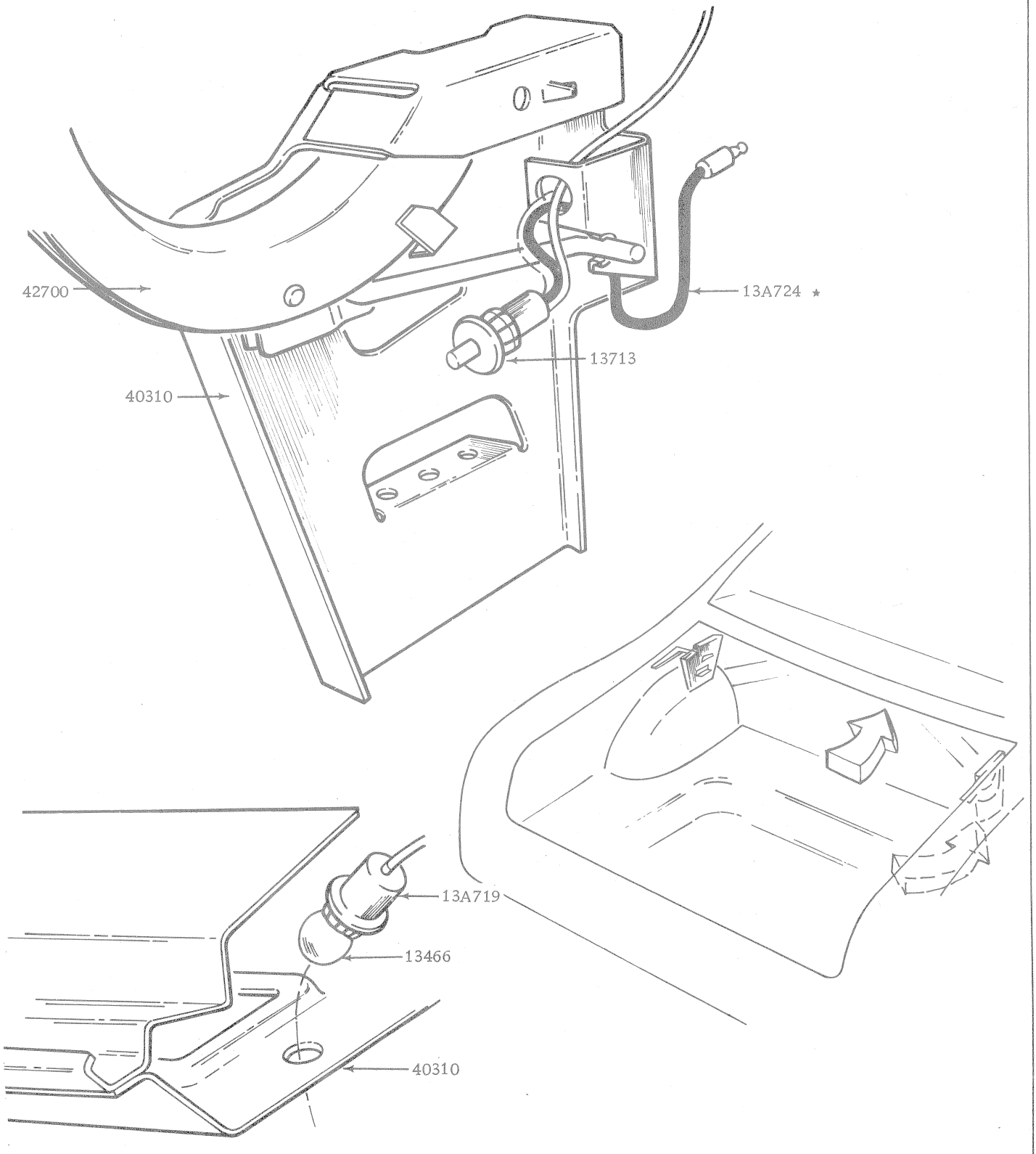

LUGGAGE COMPARTMENT COURTESY LAMP AND SWITCH

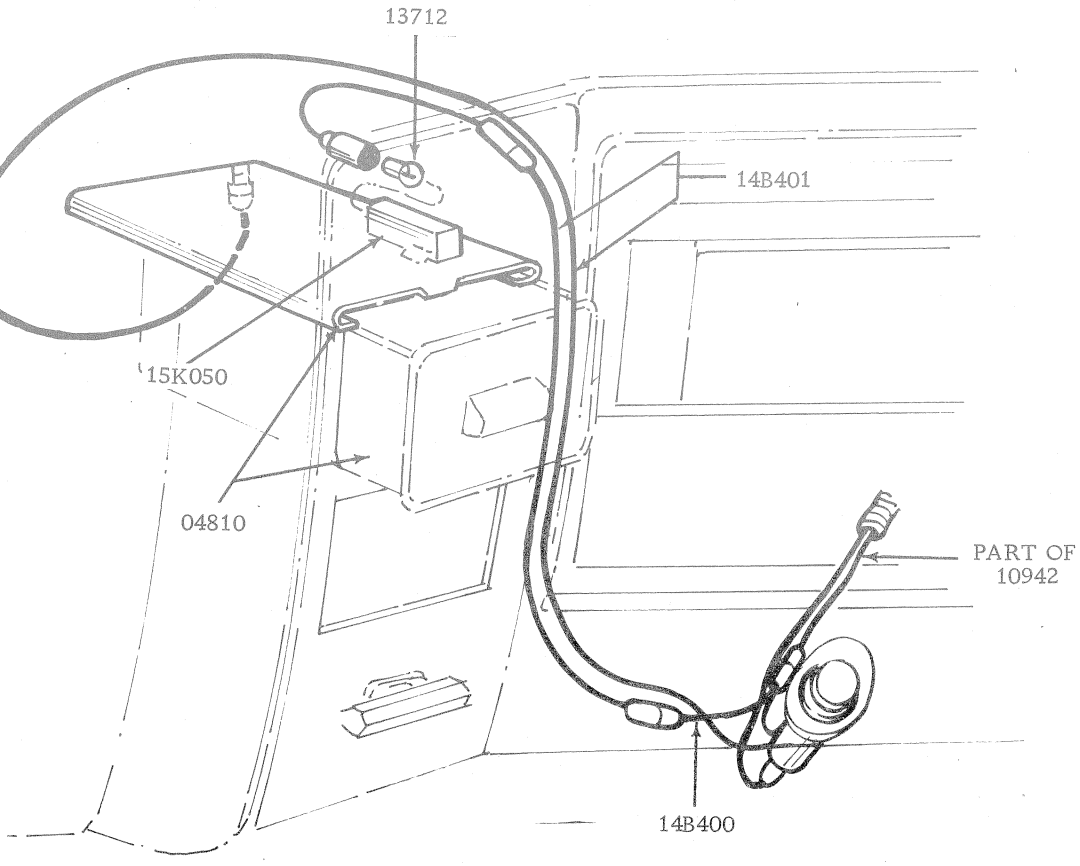

WIRING ASH TRAY LIGHT

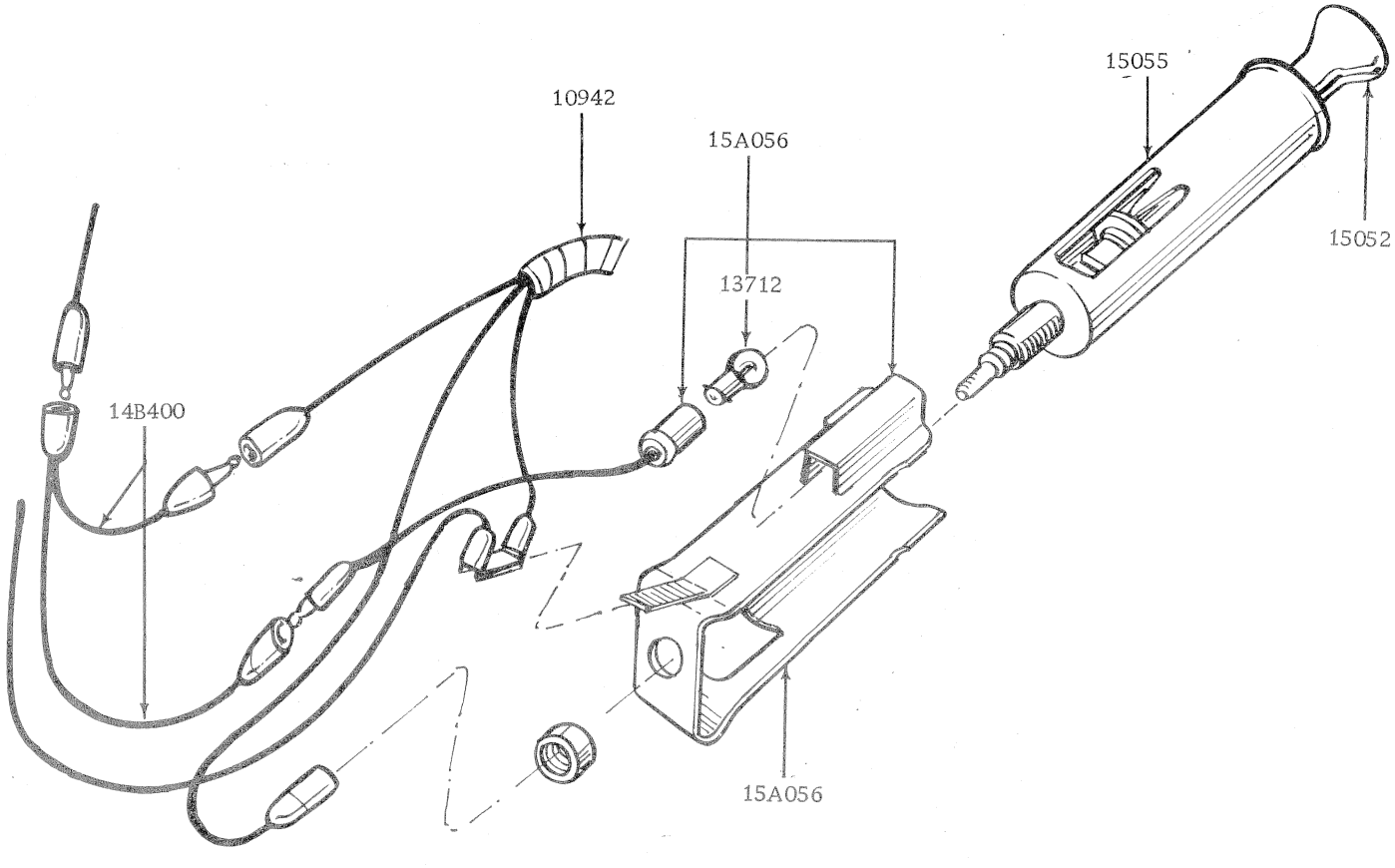

WIRING CIGAR LIGHTER

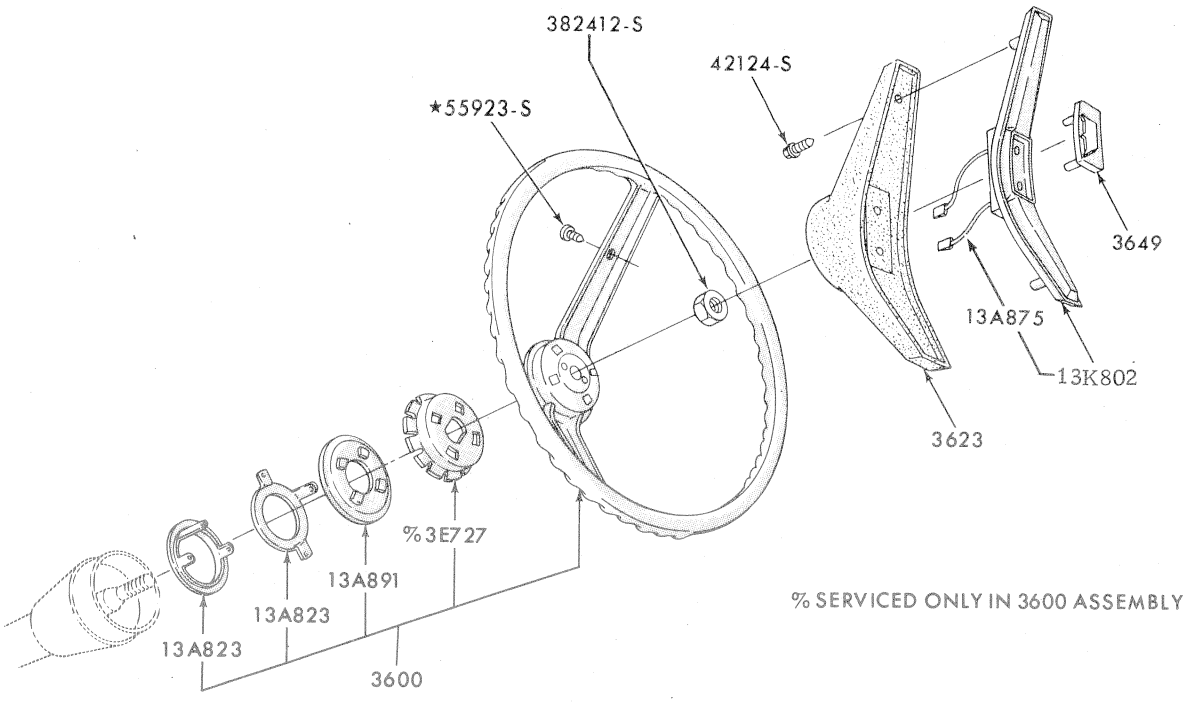

STEERING WHEEL AND HORN MECHANISM ALL EXC. 54H, 65H AND RALLY PACK

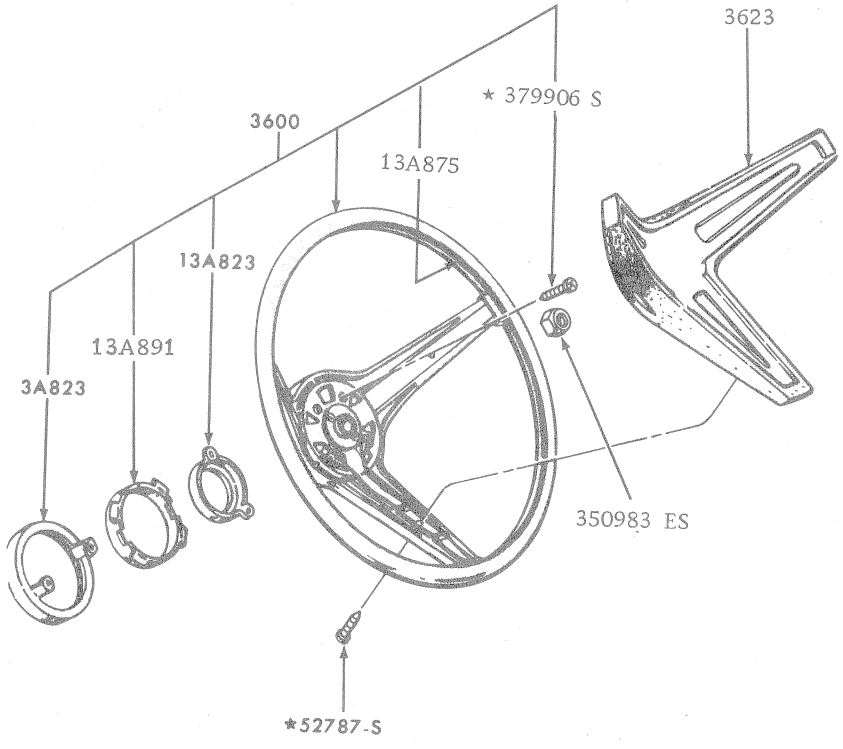

STEERING WHEEL AND HORN MECHANISM 54H, 65H AND RALLY PACK

MODEL	BODY TYPE	REMARKS	UNIT	PART NUMBER		
– – 14A011 – – SWITCH ASSY. – TAILGATE WINDOW LIMIT						
XA/B	71	Power tailgate	1	D2AZ	14A011	A
– – 14A066 – – BRACKET – CIRCUIT BREAKER MOUNTING						
XA/B, ZF/G	54, 65, 71	Electric windows & power tailgate	a/r	C1AZ	14A066	A
– – 14A067 – – FUSE BLOCK ASSY.						
XA,ZF	All	To 8/73	1	XA	14A067	AA
XA/B, ZF/G	All	From 8/73	1	XA	14A067	B
XA/B, ZF/G	All	Screw No. 10 x 12 x 1¾" hex. hd. tapping fuse block to R.H. inner lower panel	2	42165 S2		
XA/B, ZF/G	All	Clip – block removable	2	V 388249 S		
– – 14A073 – – PANEL ASSY. – FUSE BOX JUNCTION						
ZG	All	From 12/74	1	PL	14A073	A
– – 14A075 – – COVER ASSY. – FUSE BOX JUNCTION PANEL						
ZG	All	From 12/74	1	PL	14A075	A
– – 14A076 – – COVER – FUSE BOX						
XA/B, ZF/G	All		1	XA	14A076	AA
– – 14085 – – WIRING ASSY. – POWER WINDOW EXTENSION						
XA/B, ZF/G	All		2	XA	14085	A
– – 14A163 – – RETAINER – WIRING						
XA/B, ZF/G	All	Loom to cluster & body	a/r	XT	14A163	A
XA/B, ZF/G	All	10942 to cluster – 11572 to inst. panel	a/r	11 526458		
XA/B, ZF/G	54, 65	Rear lamp wiring to wheel housing	a/r	PL	14A163	A
– – 14A200 – – WIRING ASSY. – WINDOW REGULATOR SAFETY RELAY TO WINDOW REGULATOR SWITCH						
XA/B, ZF/G	54, 65	With electric windows or heated backlite – to 10/74	1	XA	14A200	A
XB,ZG	All	Exc. 351 c.i.d. 4V auto trans. – with electric windows or heated backlite – from 10/74	1	XA	14A200	A
XB	All	351 c.i.d. 4V auto trans. – with electric windows or heated backlite – from 10/74	1	XB	14A200	A*
XA/B	71	With electric windows or power tailgate	1	XA	14A200	A
– – 14300 – – CABLE ASSY. – BATTERY TO STARTER RELAY						
XA/B, ZF/G	All	200/250 c.i.d. – w/o A/C – to 7/74	1	ARC8DF	14300	A
XB,ZG	All	200/250 c.i.d. – W/o A/C – from 7/74	1	XB	14300	C
XA/B, ZF/G	All	250 c.i.d. – with A/C	1	XB	14300	B
XA/B, ZF/G	All	302 c.i.d. – to 7/74	1	XA	14300	C
XB,ZG	All	302 c.i.d. – from 7/74	1	XB	14300	A
XA/B, ZF/G	All	351 c.i.d. 2V	1	XB	14300	B
XA/B, ZF/G	All	351 c.i.d. 4V – man. trans.	1	XB	14300	B
XA/B	All	351 c.i.d. 4V – auto trans. – to 7/74	1	XA	14300	B
XB	All	351 c.i.d. 4V – auto trans. – from 7/74 to 12/74	1	XB	14300	D
XB	All	351 c.i.d. 4V – auto trans. – from 12/74	1	XB	14300	E*
– – 14301 – – CABLE ASSY. – BATTERY TO GROUND						
XA/B, ZF/G	All	200/250 c.i.d. – W/o A/C – to 12/74	1	XA	14301	A
XB,ZG	All	200/250 c.i.d. – W/o A/C – from 12/74	1	XB	14301	A*
XA/B, ZF/G	All	250 c.i.d. – with A/C	1	XA	14301	C
XA/B, ZF/G	All	302 c.i.d. – to 10/74	1	XT	14301	B
XB,ZG	All	302 c.i.d. – from 10/74 to 12/74	1	XB	14301	B*
XB,ZG	All	302 c.i.d. – from 12/74	1	XB	14301	E*
XA/B, ZF/G	All	351 c.i.d. 2V – to 12/74	1	XA	14301	D
XB,ZG	All	351 c.i.d. 2V – from 12/74	1	XB	14301	C*
XA/B	All	351 c.i.d. 4V – man. trans. – to 12/74	1	XA	14301	D
XB	All	351 c.i.d. 4V – man. trans. – from 12/74	1	XB	14301	C*
XA/B	All	351 c.i.d. 4V – auto trans. – to 12/74	1	XA	14301	B
XB	All	351 c.i.d. 4V – auto trans. – from 12/74	1	XB	14301	D*
XA/B, ZF/G	All	Washer 5/16" – cable to block 6 cyl. W/o A/C	1	34941 S7		
XA/B, ZF/G	All	Lockwasher 7/16" – cable to block	2	34943 S8		
XA/B, ZF/G	All	Nut ¼" – 20 – cable to battery	2	33796 S36		
XA/B, ZF/G	All	Washer 3/8" lock cable to block – O.N.R.	1	34827 GS40		
XA/B, ZF/G	All	8 cyl. – auto trans. – bolt – 3/8 – 14 x ¾" – cable to block	1	20348 S2		
XA/B, ZF/G	All	Screw No. 14 – 14 x ½"H.N. cable to fender	2	31497 S8		
XA/B, ZF/G	All	6 cyl. – bolt 5/16 – 24 x 3/8" – ground cable (14301) to block	1	20303 S36		
XA/B, ZF/G	All	Cable strap – att. cable to R.H. front fender apron	1	AR 387136 S		

MODEL	BODY TYPE	REMARKS	UNIT	PART NUMBER		
– – 14303 – – CABLE – DASH TO ENGINE GROUND						
XB,ZG	All	From 12/74	1	XB	14303	A*
– – 14334 – – WIRE ASSY.						
XA/B, ZF/G	54C,D,E,G,H	"C" pillar courtesy lamp	1	XA	14334	A
XA/B	54C, 71D	Dome lamp	1	ARC8DB	14334	B
XA/B, ZF/G	54C,D,E,G,H	Clip – att. wire assy.	2	AR 387001 S100		
– – 14A353 – – SEAL – WINDOW REGULATOR SWITCH						
XA/B	71	O.N.R.	1	C5AZ	14A353	B
– – 14B400 – – WIRING ASSY. – DOUBLE EXT. ASH TRAY						
XA/B, ZF/G	54C,D,E,G,H, 65D,H, 71D		1	XA	14B400	A
– – 14401 – – WIRING ASSY. – MAIN						
XA,ZF	All	6 cyl.	1	XA	14401	AA
XA,ZF	All	8 cyl.	1	XA	14401	C
XB,ZG	All	6 cyl. – to 12/74	1	XB	14401	A
XB,ZG	All	6 cyl. – from 12/74	1	XB	14401	C*
XB	All	8 cyl. – to 12/74	1	XB	14401	B
XB	All	8 cyl. – from 12/74	1	XB	14401	BA*
ZG	All	8 cyl. – to 10/74	1	XB	14401	B
ZG	All	8 cyl. – from 10/74 to 12/74	1	ZG	14401	A*
ZG	All	8 cyl. – from 12/74	1	ZG	14401	B*
XA/B, ZF/G	All	Cable strap – wiring assy. to dash (3), radiator supt (4), front fender apron R & L.H. (4).	11	AR 387136 S		
XA/B, ZF/G	All	Strap, wiring retaining (under dash) – from 3/73	4	11 526458		
– – 14B401 – – WIRING ASSY. – ASH TRAY						
XA/B, ZF/G	54C,D,E,G,H, 65D,H, 71D		1	XA	14B401	A
– – 14B402 – – WIRING ASSY. – AERIAL DOUBLE EXTENSION						
XA/B, ZF/G	All	Use with power window for motorized aerial fitment	1	XA	14B402	AA
– – 14405 – – WIRING ASSY. – REAR LAMP						
XA	54, 65		1	XA	14405	AA
XA/B, ZF/G	54	With h/brake warning light	1	XA	14405	BR
XB	54	To 12/74	1	XB	14405	A
XB	54	From 12/74	1	XB	14405	AC*
XB	65	To 12/74	1	XB	14405	B
XB	65	From 12/74	1	XB	14405	BC*
XA/B	66, 78	To 12/74	1	XA	14405	BA
XB	66, 78	From 12/74	1	XB	14405	DA*
XA	71		1	XA	14405	CA
XB	71	To 12/74	1	XB	14405	C
XB	71	From 12/74	1	XB	14405	CB*
ZF	All		1	ZF	14405	AA
ZG	All	To 12/74	1	ZG	14405	A
ZG	All	From 12/74	1	ZG	14405	AD*
XA/B	66, 78	Cable strap – wiring assy. to floor	3	AR 387136 S		
– – 14411 – – HOLDER ASSY. – FUSE						
XB,ZG	All	With A/C – from 8/74	1	XB	14411	A*
– – 14413 – – LAMP, SWITCH AND WIRING ASSY. – GLOVE COMPARTMENT						
XA/B, ZF/G	54C,D,E,G,H, 65D,H, 71D		1	XA	14413	A
– – 14431 – – CABLE ASSY. – STARTER MOTOR RELAY TO STARTER MOTOR						
XA/B	54H, 65H	351 c.i.d. 4V – auto trans. – to 12/74	1	XW	14431	B
XB	54H, 65H	351 c.i.d. 4V – auto trans – from 12/74	1	XB	14431	A*
– – 14A436 – – RELAY ASSY. – HEAD LAMP LOW BEAM						
ZG	All	From 12/74	1	PL	14A436	A
– – 14A440 – – WIRING ASSY. – WARNING LAMP – SEAT BELT						
XA/B, ZF/G	All	Front – bucket seats	1	XA	14A440	A
XA/B, ZF/G	All		1	XA	14A440	B
XA,ZF	All	With retractable belt, frt seat	1	XA	14A440	C

MODEL	BODY TYPE	REMARKS	UNIT	PART NUMBER		
– – 14461 – – TERMINAL WIRE						
XA/B, ZF/G	All	O.N.R.	1	FDT	14461	
– – 14517 – – FUSE HOLDER – WIRING ASSY.						
XA/B, ZF/G	All	Used between cig-lighter & wiring 10942 – to 12/74	1	XA	14517	A
– – 14523/4 – – MOUNTING PLATE – POWER WINDOW						
XA/B, ZF/G	54, 65, 71	Single	3	C8AZ	14523	A
XA/B, ZF/G	54, 65, 71	Multiple – R.H. frt. door	1	C8AZ	14524	A
– – 14526 – – FUSE – VARIOUS LOCATIONS						
XA/B, ZF/G	All	8 amp	a/r	A 105 5		
XA/B, ZF/G	All	16 amp	a/r	A 105 6		
XA/B, ZF/G	All	30 amp	a/r	A 105 13		
XA/B, ZF/G	All	22 amp – head lamp circuit breaker – P/o fuse box	1	XA	14526	D
XA/B, ZF/G	All	20 amp – circuit breaker – power windows, power tailgate, heated rear window – less mounting bracket	a/r	C4DZ	14526	C
XA/B, ZF/G	All	20 amp – circuit breaker – power windows, power tailgate, heated rear window – also part of head lamp relay & circuit breaker assy. – with mounting bracket	a/r	D1AZ	14526	A
XA/B	All	Nut – No. 10 – 32 – wire assy. to circuit breaker	2	34079 S78		
XA/B	All	Washer – No. 10 lock – wire assy. to circuit breaker	2	34803 S78		
– – 14527/8 – – HOUSING – SWITCH WINDOW REGULATOR						
XA/B, ZF/G	54, 65, 71	R.H. front door	1	C8AZ	14527	B
XA/B, ZF/G	54, 65, 71	L.H. front door, R.H. & L.H. rear door or qtr. pnl.	3	C80Z	14528	B
– – 14529 – – SWITCH ASSY. – ELECTRIC WINDOW REGULATOR CONTROL						
XA/B, ZF/G	All	Single type – to 4/75	3	C8AZ	14529	A
XB, ZG	All	Single type – from 4/75	3	D3AZ	14529	F*
XA/B, ZF/G	All	Double type – to 4/75	1	C8AZ	14529	C
XB,ZG	All	Multiple type – from 4/75	1	D2MY	14529	B*
XA/B	71	Dash mounted – toggle type	1	C60Z	14529	A
XA/B	71	Tailgate mounted – key operated	1	C5AZ	14529	C
– – 14540 – – SWITCH ASSY. – WINDOW REGULATOR MULTIPLE						
XA/B, ZF/G	54, 65, 71	Master control – #C8AB 14A695 A	1	C8AZ	14540	A
– – 14559 – – CLIP – WINDOW REGULATOR SWITCH						
XA/B	71		1	C5AZ	14559	B
– – 14630/1 – – WIRING ASSY. – FRONT DOOR WITH POWER WINDOW						
XA,ZF	All	L.H. – to 2/73	1	XA	14630	AA
XA/B, ZF/G	All	L.H. – from 2/73	1	XA	14630	AC
XA/B, ZF/G	All	R.H.	1	XA	14631	AA
– – 14632/3 – – WIRING ASSY. – REAR DOOR WITH POWER WINDOW						
XA/B, ZF/G	54C,D,E,G,H, 71D	L.H.	1	XA	14632	AA
XA/B	65D,H	L.H.	1	XA	14632	BA
XA/B, ZF/G	54C,D,E,G,H, 71D	R.H.	1	XA	14633	AA
XA/B	65D,H,	R.H.	1	XA	14633	BA
– – 14677 – – RELAY ASSY.						
XA/B, ZF/G	54, 65, 71	With electric windows	1	C5AZ	14677	A
XA/B, ZF/G	54	With heated rear window	1	C5AZ	14677	A
– – 14683 – – WIRING ASSY. – BACK WINDOW REGULATOR FEED						
XA/B	71A,B,D,	Power tailgate	1	XA	14683	A
– – 14687 – – WIRING ASSY. – BACK WINDOW REGULATOR						
XA/B	71A,B,D,	Power tailgate	1	XA	14687	AA

MODEL	BODY TYPE	REMARKS	UNIT	PART NUMBER

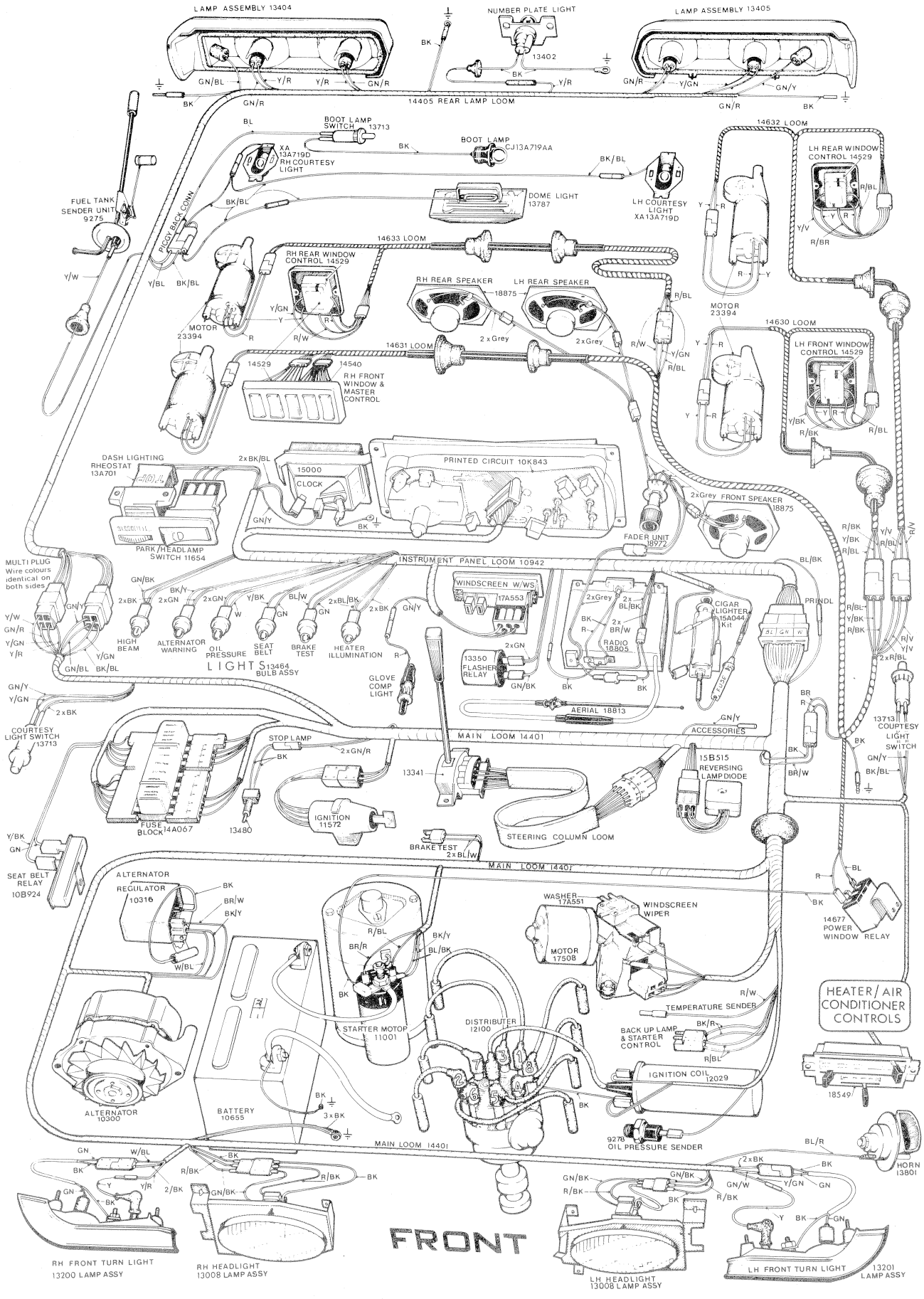

TYPICAL ELECTRICAL SYSTEM – FALCON/FAIRLANE

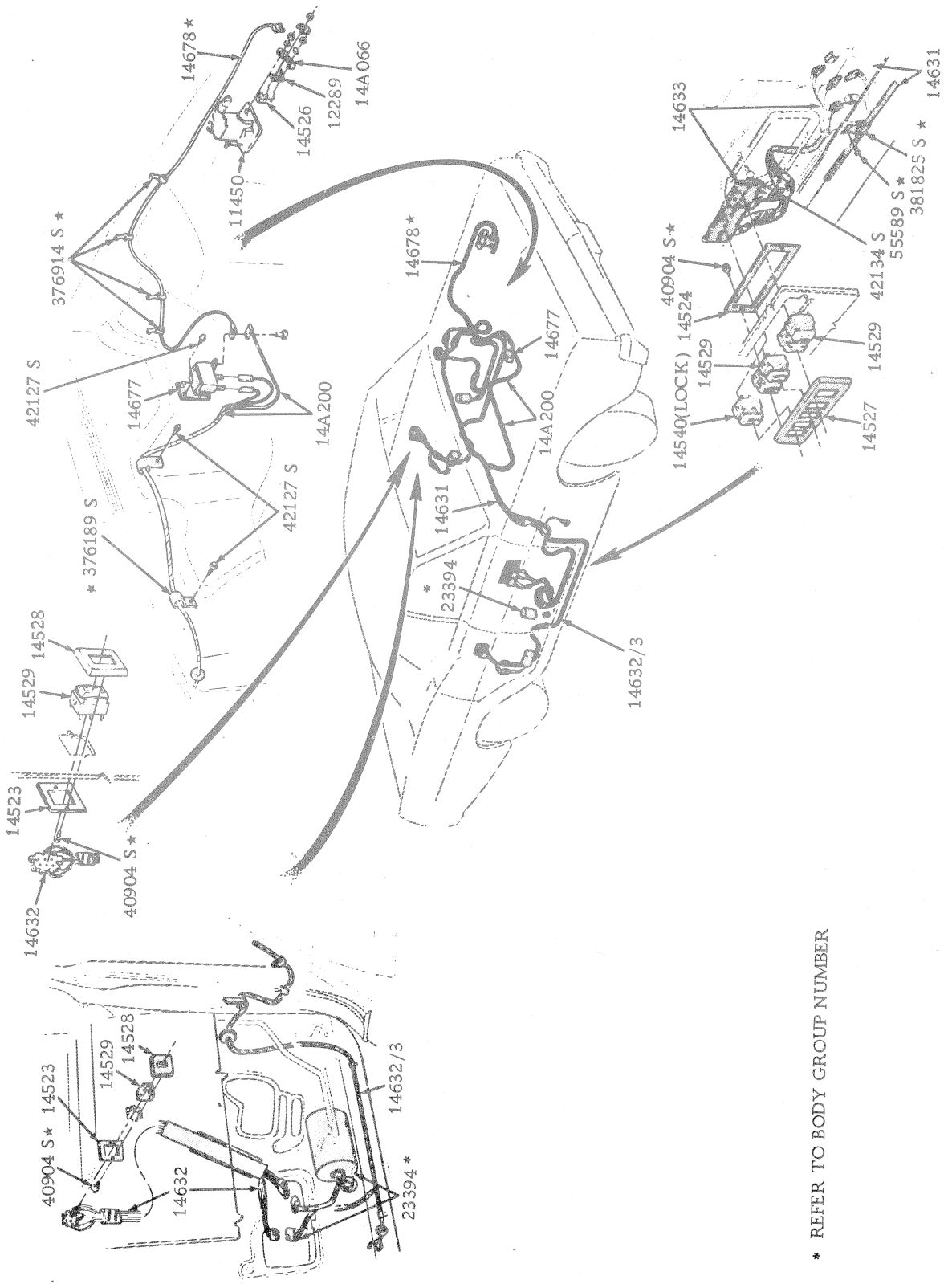

* REFER TO BODY GROUP NUMBER

ELECTRIC WINDOW REGULATOR, CONTROL, WIRING SYSTEM AND RELATED PARTS

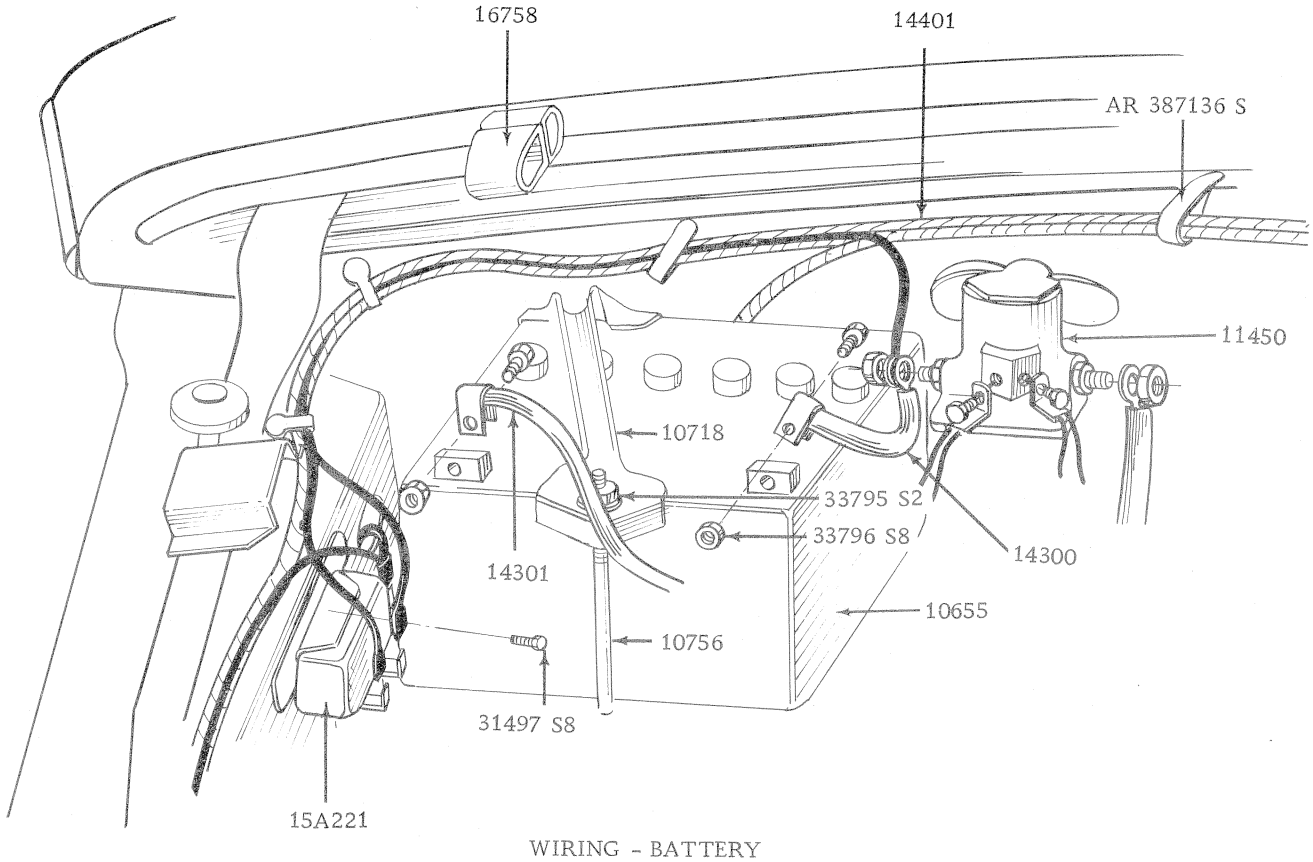

WIRING - BATTERY

MODEL	BODY TYPE	REMARKS	UNIT	PART NUMBER
– – 15000 – – CLOCK ASSY. (ALSO REFER SECTION 190A)				
XA/B, ZF/G	All		1	XA 15000 A
XA/B, ZF/G	All	Screw – No. 10 – 32 special – clock assy. to bezel	2	V 387765 S
– – 15010 – – BEZEL – CLOCK				
XA/B, ZF/G	All		1	ZF 15010 A
– – 15K050 – – SOCKET ASSY. – CIGAR LIGHTER LAMP				
XA/B, ZF/G	54C,D,E,G,H, 65D,H, 71D		1	XA 15K050 A
– – 15052 – – KNOB & ELEMENT ASSY. – CIGAR LIGHTER				
XA/B, ZF/G	All		1	71BB 15052 AB
– – 15054 – – ELEMENT ASSY. – CIGAR LIGHTER				
XB, ZG	All	From 1/74	1	XB 15054 A*
– – 15055 – – SOCKET & RETAINER ASSY. – CIGAR LIGHTER				
XA/B, ZF/G	All		1	71BB 15055 AA
– – 15056 – – RETAINER – CIGAR LIGHTER				
XA/B	54B, 65B, 66B, 71B		1	XA 15056 A
XA/B, ZF/G	54C,D,E,G,H, 65D,H, 71D		1	XA 15A056 A
XB, ZG	All	Nut – cigar lighter to retainer	1	E 820000 S36*
– – 15200 – – LAMP ASSY. – DRIVING				
XA/B	All		2	XA 15200 A
XA/B	All	Cup washer – lamp mounting – 5/16" – O.N.R.	4	V 387691 S8
– – 15A200 – – SWITCH ASSY. – DRIVING LIGHT				
XA/B	All		1	XA 15A200 A
XA/B	All	Screw – switch to dash – No. 8 – 15 x ½" – O.N.R.	2	52726 S40
XA/B	All	Flat washer – switch to dash – No. 5	2	44706 S
– – 15A201 – – LAMP ASSY. – BODY SIDE				
XA/B, ZF/G	All	R.H.	1	XA 15A201 A
XA/B, ZF/G	All	L.H.	1	XA 15A201 B
XA/B, ZF/G	All	Clip – lamp retaining	4	V 388197 S2
– – 15B201 – – SHIELD – REAR LAMP IN BOOT				
XA, ZF	54, 65	R.H. – To 3/73 – O.N.R.	1	XA 15B201 A
XA, ZF	54, 65	L.H. – To 3/73 – O.N.R.	1	XA 15B201 B
– – 15202 – – LENS & REFLECTOR ASSY. – DRIVING LIGHT				
XA/B	All		2	XA 15202 A*
– – 15B206/7 – – BRACKET ASSY. – DRIVING LAMP MOUNTING				
XA	All	R.H.	1	XA 15B206 A
XB	All	R.H.	1	XB 15B206 A
XA	All	L.H.	1	XA 15B207 A
XB	All	L.H.	1	XB 15B207 A
XA/B	All	Washer – ext. tooth – 5/16"	2	34956 S
– – 15A210 – – HOUSING ASSY. – BODY SIDE LAMP				
XA/B, ZF/G	54, 65	R.H. – to 7/73	1	XA 15A210 C
XA/B	54, 65	R.H. – from 7/73	1	XA 15A210 C
XA/B, ZF/G	54, 65	L.H. – to 7/73	1	XA 15A210 D
XA/B	54, 65	L.H. – from 7/73	1	XA 15A210 D
ZF/G	All	R.H. – from 7/73	1	PL 15A210 C
ZF/G	All	L.H. – from 7/73	1	PL 15A210 D
– – 15A215 – – LENS ASSY. – BODY SIDE LAMP				
XA/B, ZF	54, 65	R.H./L.H.	2	XA 15A215 B
ZG	All		2	PL 15A215 C
– – 15A220 – – RELAY ASSY. – REVERSE LAMP				
XA, ZF	All	O.N.R.	1	XA 15A220 A
– – 15A221 – – RELAY ASSY. – DRIVING LAMPS				
XA/B	All	With driving lights	1	XW 15A221 B
– – 15K230 – – PLATE – DRIVING LAMP REINFORCEMENT				
XA/B	All		2	XA 15K230 A

MODEL	BODY TYPE	REMARKS	UNIT	PART NUMBER		
– – 15K230/1 – – REINFORCEMENT – DRIVING LAMP						
XA/B	All	R.H. – without A/C	1	XA	15K230	B
XA/B	All	L.H. – without A/C	1	XA	15K231	B
XA/B	All	Bolt – ¼" – 20 x ½" – att. reinf.	4	20344 S78		
– – 15K232 – – WIRING ASSY. – DRIVING LAMP SWITCH TO RELAY						
XA/B	All		1	XA	15K232	AA
– – 15237 – – WIRING ASSY. – DRIVING LAMP						
XA/B	All		1	XA	15237	AA
– – 15248 – – WIRING ASSY. – DRIVING LAMP SWITCH TO LIGHT SWITCH						
XA/B	All		1	XA	15248	AA
– – 15500 – – LAMP ASSY. – REVERSING						
XA/B, ZF/G	54, 65	Except 54H, 65H, – Japan	2	72DA	15500	AOSO
– – 15A500 – – BRACKET – REVERSE LAMP MOUNTING						
XA/B, ZF/G	54, 65	Except 54H, 65H – Japan	2	72DA	15A500	AOSO
– – 15A515 – – WIRE ASSY. – BACK UP LAMP						
XA/B, ZF/G	All	6 cyl. – B/Warner auto. only	1	XA	15A515	A
– – 15B515 – – SWITCH ASSY. – REVERSING LAMP						
XB, ZG	All		1	XB	15B515	A
– – 15517 – – CLAMP ASSY. – BACK UP LAMP SWITCH LOWER						
XA/B, ZF/G	All	Manual trans. – column shift	1	XW	15517	A
XA/B, ZF/G	All	Manual trans. – floor shift	1	XT	15517	A
XA/B, ZF/G	All	Nut No. 10 – 32 – clamp assy. to steering column – manual trans. – column shift	3	34079 S78		
– – 15520/40 – – SWITCH ASSY. – BACK UP LAMP						
XA/B, ZF/G	All	3 spd. – man. trans.	1	SW 938		
XB	All	4 spd – B/W man. trans.	1	XB	15520	A
XA/B, ZF/G	All	Nut 7/16" – 20 hex. jam. – switch to clamp	1	34690 S8		
– – 15525 – – WIRING ASSY. – BACK UP LAMP SWITCH TO FEED						
XA/B	54H, 65H	Auto. trans. – to 8/74	1	XW	15525	A
XA/B, ZF/G	All	6 cyl. and C4 trans.	1	XY	15525	AA
XA/B, ZF/G	All	250 c.i.d. – manual trans. – floor shift	1	XW	15525	C
XA/B, ZF/G	All	8 cyl. – manual trans. – floor shift	1	XT	15525	C
XA/B, ZF/G	All	302 c.i.d. – manual trans. – col. shift	1	XT	15525	C
XA/B, ZF/G	54, 65	Except 54H, 65H – Japan	1	72DA	15525	AOSO
XB, ZG	All	B/W auto. trans.	1	XB	15525	AA
XB, ZG	All	FMX auto. trans. – from 8/74	1	XB	15525	AA
XB, ZG	All	3 spd. & 4 spd. – man. trans.	1	XB	15525	BA
– – 15A525 – – WIRE ASSY. – BACK UP LAMP WIRE EXTENSION						
XA/B, ZF/G	All	6 cyl. – auto. trans.	1	ZA	15A525	A
– – 15536 – – SOCKET & WIRING ASSY. – BACK UP LAMP						
XA/B, ZF/G	All		2	ARC8DB	15536	A
– – 15B581 – – WIRING ASSY. – ROOF LIGHT						
XA/B, ZF/G	All	Police & taxi – O.N.R.	1	XA	15B581	A
– – 15B663 – – NUT – TOP CONTROL SWITCH MOUNTING						
XA/B, ZF/G	All	Stereo & radio player – O.N.R.	1	AR3038E	15B663	A
– – 15A808 – – WIRE ASSY. – TRANSMISSION SELECTOR DIAL LAMP						
XA/B, ZF/G	All	Lamp wire – 46" long	1	XA	15A808	A
XA/B, ZF/G	All	Feed wire – 10" long – to 5/74	1	C70Z	15A808	A
XA/B, ZF/G	All	Feed wire – 10" long – from 5/74	1	XB	15A808	A*
– – 15A811 – – SHROUD ASSY. – TRANS. SELECTOR INDICATOR LAMP						
XA/B, ZF/G	All	250/302/351 c.i.d. – auto. trans. – floor shift with console	1	C80Z	15A811	A
XA/B, ZF/G	All	250/302/351 c.i.d. – auto. trans. – floor shift without console	1	C5ZZ	15A811	F
XA/B, ZF/G	All	Screw No. 6 – 18 x .32" tapping – shroud to console	2	52718 S8		
– – 15824 – – SWITCH ASSY. – TRANS. – NEUTRAL START						
XA/B	All	351 c.i.d. 4V	1	3016E	15824	A
– – 15A851 – – SWITCH & BRACKET ASSY. – HANDBRAKE WARNING						
XA, ZF	All		1	C7ZZ	15A851	A

MODEL	BODY TYPE	REMARKS	UNIT	PART NUMBER		
– – 16A003 – – MOULDING – FRONT FENDER SIDE – FRONT						
XA,ZF/G	All		2	XA	16A003	A
XB	All		2	XB	16A003	A
XA,ZF	All	Nut 1/8" sleeve – mldg. to fender	2	375890 S102		
XA/B, ZF/G	All	Clip – .125 tubular – moulding to fender	a/r	V 388398		
– – 16005/6 – – FENDER ASSY. – FRONT						
XA,ZF	All exc. 54H					
	65H	R.H.	1	XA	16005	C*
XA	54H, 65H	R.H.	1	XA	16005	B
XB	All	R.H.	1	XB	16005	A
ZG	All	R.H.	1	ZG	16005	A
XA,ZF	All exc. 54H,					
	65H	L.H.	1	XA	16006	C*
XA	54H, 65H	L.H.	1	XA	16006	B
XB	All	L.H.	1	XB	16006	A
ZG	All	L.H.	1	ZG	16006	A
XA/B, ZF/G	All	Bumper – fender to cowl	2	381519 S		
XA,ZF	All	Washer – flat – fender to body	4	44725 S78		
XA,ZF	All	Screw & washer – 5/16" – 18 x .94	a/r	57039 S2		
– – 16A005/6 – – BRACKET – FRONT FENDER TO PILLAR MOUNTING						
XA/B, ZF/G	All		2	XA	16A005	A
– – 16A010/11 – – BRACKET ASSY. – FRONT FENDER EXTENSION TO RADIATOR SUPPORT						
XA,ZF	All	R.H.	1	XA	16A010	A
XB	All	R.H.	1	XB	16A010	A
ZG	All	R.H.	1	PL	16A010	AA
XA,ZF	All	L.H.	1	XA	16A011	A
XB	All	L.H.	1	XB	16A011	A
ZG	All	L.H.	1	PL	16A011	A
– – 16A034/5 – – MEMBER – FRONT FENDER APRON TO COWL SIDE						
XA/B, ZF/G	All	R.H.	1	XA	16A034	B
XA/B, ZF/G	All	L.H.	1	XA	16A035	B
– – 16038/9 – – MOULDING – FRONT FENDER WHEEL OPENING						
XA/B	All	R.H.	1	XA	16038	A
XA/B	All	L.H.	1	XA	16039	A
ZF/G	All	R.H.	1	ZF	16038	A
ZF/G	All	L.H.	1	ZF	16039	A
XA/B, ZF/G	All	Nut 1/8" sleeve – mldg. to fender	a/r	375890 S102		
XA/B, ZF/G	All	Screw – No. 8 – 18 x .375 – round washer head – att. mldg to body	a/r	379560 S		
– – 16044/5 – – APRON – FRONT FENDER FRONT						
XA/B, ZF/G	All	R.H. – to 12/74	1	XA	16044	A
XB,ZG	All	L.H. – from 12/74	1	XB	16044	A*
XA/B, ZF/G	All	L.H.	1	XA	16045	A
– – 16A044/5 – – APRON & FRONT SIDE MEMBER ASSY. – FRONT						
XA/B, ZF/G	All exc. 54H, 65H	R.H. – to 12/74	1	XA	16A044	A
XB,ZG	All exc. 54H, 65H	R.H. – from 12/74	1	XB	16A044	A*
XA/B	54H, 65H	R.H. – without A/C – to 12/74	1	XA	16A044	A
XB	54H, 65H	R.H. – without A/C – from 12/74	1	XB	16A044	A*
XA/B	54H, 65H	R.H. – with A/C – to 12/74	1	XA	16A044	B
XB	54H, 65H	R.H. – with A/C – from 12/74	1	XB	16A044	C*
XA/B, ZF/G	All exc. 54H, 65H	L.H. – to 12/74	1	XA	16A045	A
XB,ZG	All exc. 54H, 65H	L.H. – from 12/74	1	XB	16A045	A*
XA/B	54H, 65H	L.H. – without A/C – to 12/74	1	XA	16A045	A
XB	54H, 65H	L.H. – without A/C – from 12/74	1	XB	16A045	A*
XA/B	54H, 65H	L.H. – with A/C – to 12/74	1	XA	16A045	B
XB	54H, 65H	L.H. – with A/C – from 12/74	1	XB	16A045	C*
XA/B, ZF/G	All	Nut & retainer 5/16" – 18 member to apron	2	378680 S40		
– – 16D048 – – BRACKET – FRONT FENDER EXTENSION TO RADIATOR SUPPORT UPPER						
ZG	All		2	ZG	16D048	A
– – 16C058 – – BRACE – FRONT FENDER APRON TO DASH LOWER						
XA,ZF	All	To 12/72	2	ARC6DB	16C058	A
XA/B, ZF/G	All	From 12/72 – O.R.B. XA 16A034 B	1	XA	16C058	A

MODEL	BODY TYPE	REMARKS	UNIT	PART NUMBER		
– – 16B068/9 – – MOULDING ASSY. – FRONT FENDER SIDE (REFER 29300 FOR ATTACHING KIT)						
XA, ZF/G	All	R.H. – black	1	XA	16B068	AA1A
XB	All	R.H. – black	1	XB	16B068	AA1A
XA,ZF/G	All	L.H. – black	1	XA	16B069	AA1A
XB	All	L.H. – black	1	XB	16B069	AA1A
– – 16086 – – RETAINER – MOULDING FRONT FENDER FRONT						
XA,ZF	All	Att. moulding 16164/5 to front fender	2	XA	16086	AA
XA,ZF	All	Att. moulding 16164/5 to front fender	2	AR 387281 S		
– – 16098 – – PLATE – FRONT FENDER NAME						
XA/B	54D, 65D, 71D	"Fairmont"	2	XA	16098	A
ZF/G	54E	"Custom"	2	ZF	16098	B
ZF/G	All	"Fairlane"	2	ZF	16098	A
ZG	All	"Fairlane" – located front door trim	2	ZF	16098	A
XA/B, ZF/G	All	Clip, plate retaining – from 7/73	a/r	V 388431 S		
– – 16102 – – SEAL – FRONT FENDER SPLASH SHIELD REAR EXTENSION						
XA,ZF	All	To 12/72	2	XA	16102	A
XA/B, ZF/G	All	From 12/72	2	XA	16102	B
XA	All	Nut 1/8" sleeve mldg. to fender	a/r	375890 S102		
ZF	All	Nut – 3/32" sleeve – att. plate to fender	a/r	V 388431 S		
– – 16E106/7 – – DEFLECTOR – FRONT FENDER AIR SCOOP						
XA	54H,65H	R.H.	1	XA	16E106	A
XA	54H,65H	L.H.	1	XA	16E107	A
– – 16A108/9 – – MOULDING – FRONT FENDER AIR SCOOP						
XA	54H,65H	R.H.	1	XA	16A108	A
XA	54H,65H	L.H.	1	XA	16A109	A
– – 16C134/5 – – BRACE – FRONT FENDER TO RADIATOR SUPPORT						
XA/B, ZF/G	All	R.H.	1	XA	16C134	A
XA/B, ZF/G	All	L.H.	1	XA	16C135	A
– – 16138 – – SUPPORT ASSY. – FRONT FENDER APRON & RADIATOR						
XA,ZF	All	6 cyl. – W/o A/C	1	XA	16138	A
XA,ZF	All	6 cyl. – with A/C	1	XA	16138	B
XA,ZF	All	8 cyl.	1	XA	16138	B
XB,ZG	All	6 cyl. – W/o A/C	1	XB	16138	A
XB,ZG	All	6 cyl. – with A/C	1	XB	16138	B
XB,ZG	All	8 cyl.	1	XB	16138	B
– – 16D142/3 – – STRIPE – FRONT FENDER						
XA	All	R.H. – black – rally pack	1	XA	16D142	A1A
XA	All	R.H. – gold – rally pack	1	XA	16D142	A1G
XA	All	R.H. – silver – rally pack	1	XA	16D142	A1L
XA	All	R.H. – orange – rally pack	1	XA	16D142	A1V
XB	All	R.H. – black – rally pack	1	XB	16D142	AA1A
XB	All	R.H. – gold – rally pack	1	XB	16D142	AA1G
XB	All	R.H. – silver – rally pack	1	XB	16D142	AA1L
XB	All	R.H. – orange – rally pack	1	XB	16D142	AA1V
XA	All	L.H. – black – rally pack	1	XA	16D143	A1A
XA	All	L.H. – gold – rally pack	1	XA	16D143	A1G
XA	All	L.H. – silver – rally pack	1	XA	16D143	A1L
XA	All	L.H. – orange – rally pack	1	XA	16D143	A1V
XB	All	L.H. – black – rally pack	1	XB	16D143	AA1A
XB	All	L.H. – gold – rally pack	1	XB	16D143	AA1G
XB	All	L.H. – silver – rally pack	1	XB	16D143	AA1L
XB	All	L.H. – orange – rally pack	1	XB	16D143	AA1V
– – 16D154/5 – – BRACE – FRONT FENDER APRON						
XA,ZF	All	R.H. – from 1/73	1	XA	16D154	A
XB,ZG	All	R.H.	1	XA	16D154	C
XA,ZF	All	L.H. – from 1/73	1	XA	16D155	A
XB,ZG	All	L.H.	1	XA	16D155	C

MODEL	BODY TYPE	REMARKS	UNIT	PART NUMBER		
– – 16164/5 – – MOULDING – FRONT FENDER – FRONT						
XA,ZF	All	R.H.	1	XA	16164	A
XA,ZF	All	L.H.	1	XA	16165	A
XB	All	R.H. – for moulding repair kit – refer sect. 190B	1	XB	16164	AA
XB	All	L.H. – for moulding repair kit – refer sect. 190B	1	XB	16165	AA
ZG	All	R.H.	1	ZG	16164	A
ZG	All	L.H.	1	ZG	16165	A
XA,ZF	All	Nut – No. 8 – 32, moulding to front fender	2	55730 S36		
XA,ZF	All	Retainer – moulding to front fender	2	AR 387281 S		
– – 16A164 – – KIT – FENDER – ORNAMENT (ALSO REFER ACCESSORIES SECTION)						
XA,ZF	54B,D	Malaysia only	1	CH	16A164	A
– – 16A165 – – BRACKET – FRONT FENDER MOULDING SUPPORT						
ZG	All		1	ZG	16A165	A
– – 16C174 – – BRACKET – FRONT FENDER MOUNTING REAR LOWER						
XA/B, ZF/G	All		2	XA	16C174	A
XA/B, ZF/G	All	Washer ¼" x .62" O.D. x .06" thick – bracket to fender	4	44719 S78		
XA/B, ZF/G	All	Screw – ¼ – 14 x .62" – bracket to fender (2), to body (2)	4	55876 S2		
– – 16228 – – TRANSFER – FRONT FENDER						
XA	65B	Superbird "302"	2	XA	16228	A
– – 16237 – – EMBLEM – FRONT FENDER SIDE (REFER 29300 FOR ATTACHING KIT)						
XA/B, ZF/G	All	250 c.i.d. (1V) "250"	2	XA	16237	CA
XA,ZF	All	250 c.i.d. (2V) "250"	2	XA	16237	CB
XA/B, ZF/G	All	302 c.i.d. "V8"	2	XA	16237	BA
XA/B, ZF/G	All	351 c.i.d. except 54H, 65H. "351"	2	XA	16237	AA
XA	54H, 65H	351 c.i.d. – "351 GT"	2	XA	16237	DA
XB	54H, 65H	Transfer – "GT 351" – black	2	XB	16237	AA1A
XB	54H, 65H	Transfer – "GT 351" – silver	2	XB	16237	AA1S
XA,ZF	All	Nut 1/8" self thread emblem to front fender except 54H, 65H	4	373888 S35		
– – 16A240 – – BASE – FRONT FENDER SIDE EMBLEM						
XA,ZF	All	250 c.i.d. (2V) "Hi Performance"	2	XA	16A240	AA
– – 16D562 – – SEAL – FRONT FENDER SPLASH SHIELD REAR						
XA/B, ZF/G	All		2	XA	16D562	A
– – 16D566/7 – – EXTENSION – FRONT FENDER SPLASH SHIELD						
XA/B, ZF/G	All	R.H. – from 1/73	1	XA	16D566	A
XA/B, ZF/G	All	L.H. – from 1/73	1	XA	16D567	A
– – 16B568/9 – – SHIELD – FRONT FENDER SPLASH REAR						
XA,ZF	All	R.H. – to 12/72	1	XA	16B568	A
XA,ZF	All	L.H. – to 12/72	1	XA	16B569	A
XA/B, ZF/G	All	R.H. – from 12/72	1	XA	16B568	B
XA/B, ZF/G	All	L.H. – from 12/72	1	XA	16B569	B
XA/B, ZF/G	All	Screw – ¼" – 14 x .62" – shield (16B568) & extn. (16B572) to body	16	55876 S2		
– – 16A572 – – SEAL – FRONT FENDER TO RADIATOR SUPPORT						
XA/B, ZF/G	All		2	XA	16A572	A
– – 16B572/3 – – EXTENSION – FRONT FENDER REAR SPLASH SHIELD						
XA,ZF	All	R.H. – to 12/72	1	XA	16B572	A
XA,ZF	All	L.H. – to 12/72	1	XA	16B573	A
XA/B, ZF/G	All	R.H. – from 12/72	1	XA	16B572	B
XA/B, ZF/G	All	L.H. – from 12/72	1	XA	16B573	B
– – 16604 – – NAME PLATE – HOOD						
ZG	All	"Fairlane"	1	ZG	16604	A
– – 16606 – – LETTER – HOOD FRONT						
XA/B	65	"F" boot lid	1	C9AZ	16606	A
XA/B	65	"O" boot lid	1	C9AZ	16606	B
XA/B	65	"R" boot lid	1	C9AZ	16606	C
XA/B	65	"D" boot lid	1	C9AZ	16606	D
XA/B, ZF/G	All	"F" – hood – also tailgate, 66/71/78	1	C7AZ	16606	A
XA/B, ZF/G	All	"O" – hood – also tailgate, 66/71/78	1	C7AZ	16606	B
XA/B, ZF/G	All	"R" – hood – also tailgate, 66/71/78	1	C7AZ	16606	C
XA/B, ZF/G	All	"D" – hood – also tailgate, 66/71/78	1	C7AZ	16606	D
XA,ZF	All	Nut 1/8" sleeve – letter to hood t/gate and front fender	8	375890 S102		
XA/B, ZF/G	All	Clip, letter retaining	a/r	V 388431 S		

MODEL	BODY TYPE	REMARKS	UNIT	PART NUMBER	
– – 16607 – – KIT – HOOD ORNAMENT					
XA	54B,D	Malaysia only	1	XA	16607 A
– – 16612 – – HOOD ASSY.					
XA	All	Without air scoops	1	XA	16612 A
XA	All	With air scoops	1	XA	16612 B
XB	All	Without air scoops	1	XB	16612 A
XB	All	With air scoops	1	XB	16612 B
ZF/G	All		1	PL	16612 A
– – 16C612 – – MOULDING ASSY. – HOOD AIR SCOOP OPENING					
XA	All		2	XA	16C612 A
– – 16C630 – – AIR SCOOP – HOOD					
XB	All	R.H.	1	XB	16C630 A
XB	All	L.H.	1	XB	16C630 B
– – 16700 – – LOCK ASSY. – HOOD					
XA/B, ZF/G	All		1	XT	16700 C
XA/B, ZF/G	All	Nut – retaining – lock to support	4	379155 S40	
XA/B, ZF/G	All	Screw – 5/16" – lock to support	a/r	378196 S40	
– – 16A703 – – LATCH – HOOD EXTERNAL					
XA/B	All		2	XY	16A703 A
XA/B	All	Pin – 1/8" x 1" – latch to hood	2	71771 S36	
– – 16A704 – – SPRING – HOOD LATCH EXTERNAL					
XA/B	All		2	XY	16A704 A
– – 16A706/7 – – RETAINER ASSY. – HOOD LATCH EXTERNAL					
XA/B	All	R.H.	1	XA	16A706 A
XA/B	All	L.H.	1	XA	16A707 A
XA/B	All	Washer – plain ¼" – retainer to hood	4	44720 S7	
– – 16A709 – – PLATE – HOOD LATCH BEZEL ANCHOR EXTERNAL					
XA/B	All		2	XA	16A709 AA
– – 16738 – – ABSORBER – HOOD SOUND					
ZF/G	All	Moulded	1	ZF	16738 AA
– – 16A746 – – RETAINER ASSY. – HOOD FRONT MOULDING					
XA,ZF	All		10	XA	16A746 A
ZG	All		8	XB	16A746 A
– – 16758 – – BUMPER – HOOD TO FENDER					
XA/B, ZF/G	All		4	XA	16758 A
XA,ZF	All		2	XR	16758 A
XB,ZG	All		1	XR	16758 A
XA/B, ZF/G	All	Nut – jam – bumper to radiator support	2	33922 S40	
– – 16774 – – SUPPORT ASSY. – HOOD LOCK					
XA,ZF	All		1	XA	16774 A
XB	All		1	XB	16774 A
ZG	All		1	ZG	16774 A
XA,ZF	All	Screw & washer – 5/16" – 18 x .94	a/r	57039 S2	
– – 16776 – – RETAINER – HOOD INSULATION					
ZF/G	All	Use with 16738	5	C7WY	16776 A
– – 16789 – – SPRING – HOOD HINGE					
XA/B, ZF/G	All		2	XA	16789 A
– – 16796/7 – – HINGE – HOOD – LESS SPRINGS					
XA/B, ZF/G	All	R.H.	1	XA	16796 A
XA/B, ZF/G	All	L.H.	1	XA	16797 A
XA,ZF	All	Stud – head hinge pivot. (16698) bracket hood hinge on hood to (16A726/7) link hood hinge rear upper	2	AR 387506 S	
XA,ZF	All	Circlip – special 3/8" (16698) bracket hood hinge on hood to 16A726/7 link hood hinge rear upper	2	AR 387507 S	

MODEL	BODY TYPE	REMARKS	UNIT	PART NUMBER		
– – 16800/1 – – HINGE ASSY. – HOOD						
XA,ZF	All	R.H. – O.R.C. (1) XA 16796 A, (1) XA 16789 A	1	XA	16800	A
XA,ZF	All	L.H. – O.R.C. (1) XA 16797 A, (1) XA 16789 A	1	XA	16801	A
XA,ZF	All	Screw & washer – 5/16" – 18 x .94	a/r	57039 S2		
– – 16856 – – MOULDING – HOOD FRONT (REFER 29300 FOR ATTACHING KIT)						
XA	All		1	XA	16856	A
ZF	All		1	ZF	16856	A
ZG	All		1	ZG	16856	A
XA,ZF	All	Nut – No. 8 – 32 – att. moulding to hood assy.	8	55730 S36		
– – 16892 – – HOOK ASSY. – HOOD AUXILIARY CATCH						
XA, ZF/G	All		1	XA	16892	A
XB	All		1	XB	16892	A
– – 16897 – – SPRING – HOOD AUXILIARY CATCH						
XA/B, ZF/G	All		1	XR	16897	A
– – 16A902 – – SPRING – DOWEL HOOD LOCK						
XA/B, ZF/G	All		1	XT	16A902	A
XA/B, ZF/G	All	Nut – ½" – 20 spring to hood	1	33846 S7/8		
– – 16A916 – – CABLE & HANDLE ASSY. – HOOD CATCH CONTROL						
XA/B, ZF/G	All		1	XA	16A916	AA
XA/B, ZF/G	All	Screw ¼" – 20 x ½" hex. cable to panel	1	40927 S8		
XA,ZF	All	Screw No. 10 – 32 x ½" hex. cable to lock – not serviced	1	41179 S42		
XA/B, ZF/G	All	Cable strap – handle & cable assy. catch control to front fender	2	AR 387136 S		
XA/B, ZF/G	All	Retainer assy. – cable assy. to lock assy. hood	1	AR 387236 S40		
XA/B, ZF/G	All	Grommet – .050" O.D. x 0.19" I.D. – O.N.R.	1	V 388290 S		
XA,ZF	All	Grommet – 5/72 to 2/73 hood cable to radiator support panel	1	O 568920		
– – 16921 – – SPRING – HOOD LOCK TRIGGER						
XA/B, ZF/G	All		1	ARC6DB	16921	A
– – 16929 – – DOWEL – HOOD LOCK						
XA,ZF	All		1	C30Z	16929	A
XB	All		1	XB	16929	A
ZG	All	To 2/75	1	C30Z	16929	A
ZG	All	From 2/75	1	ZG	16929	A*
– – 16A942 – – PAD ASSY. – HOOD TO COWL (REFER 02805)						

MODEL	BODY TYPE		REMARKS	UNIT	PART NUMBER

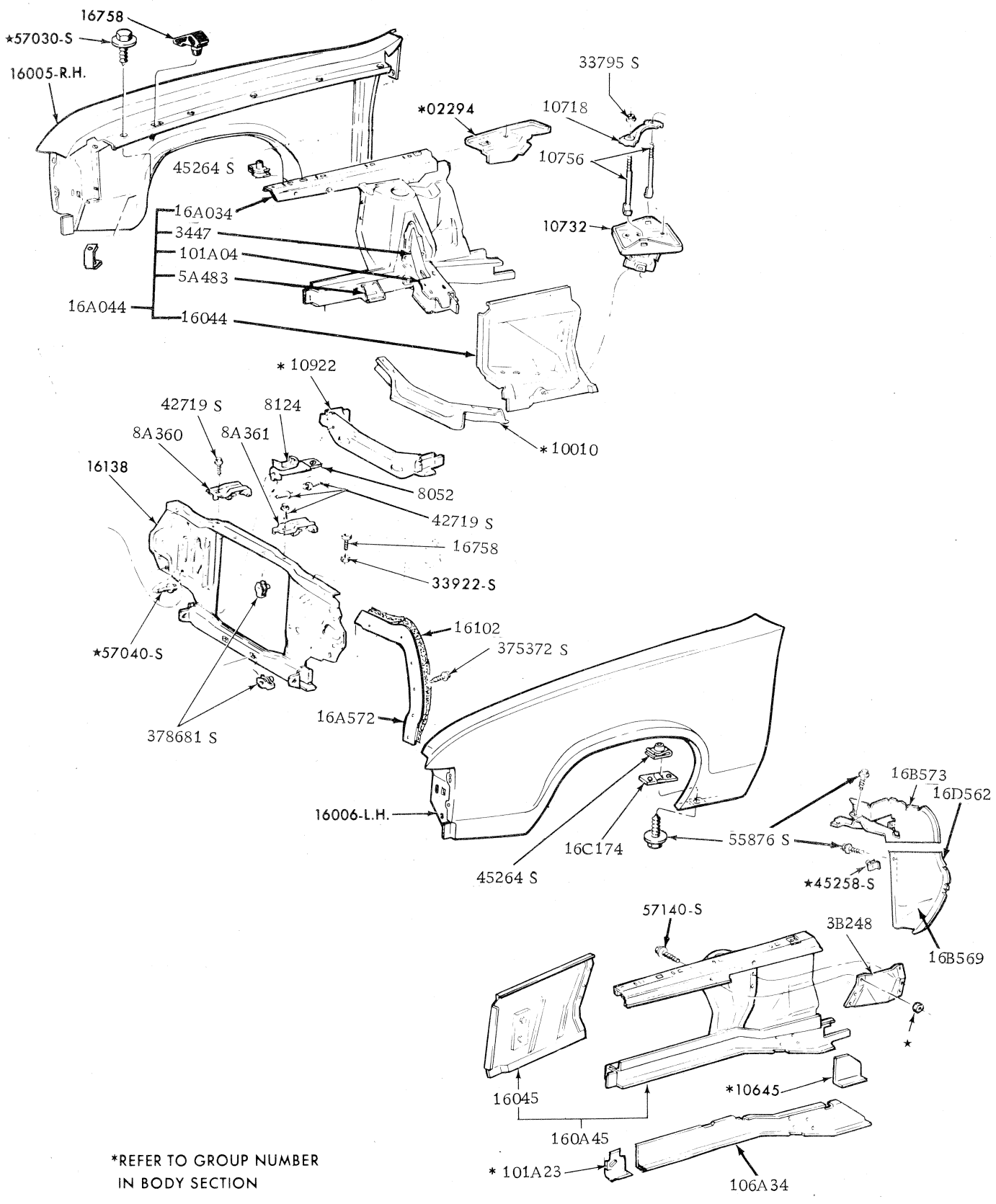

*REFER TO GROUP NUMBER
IN BODY SECTION

FRONT FENDERS AND RELATED PARTS

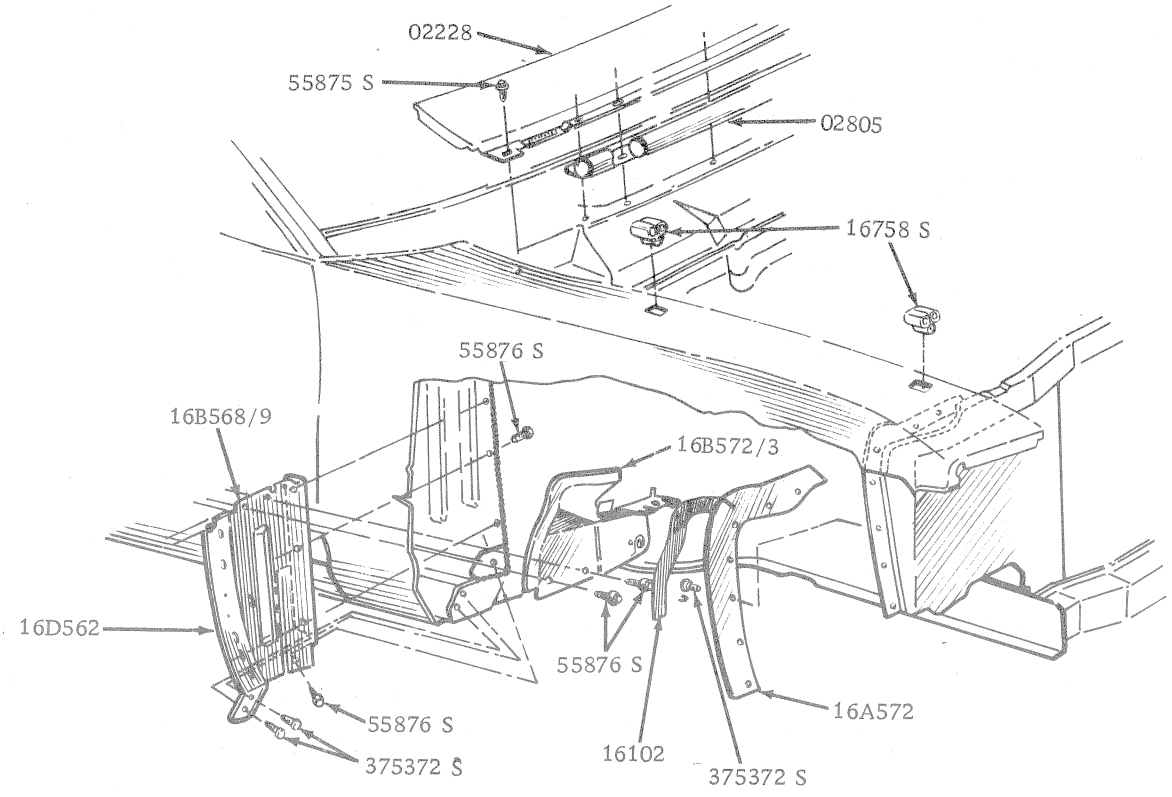

N01 02 1

SPLASH SHIELD COWL & RELATED PARTS

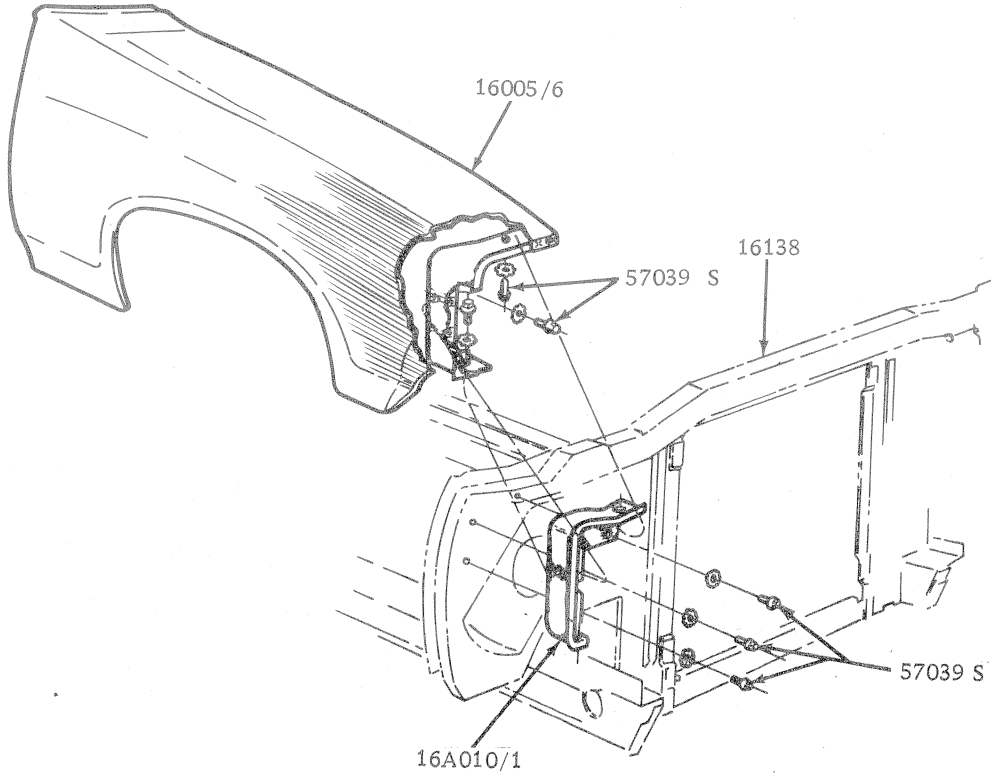

N01 02 8

FRONT FENDER – FRONT – XA, ZF

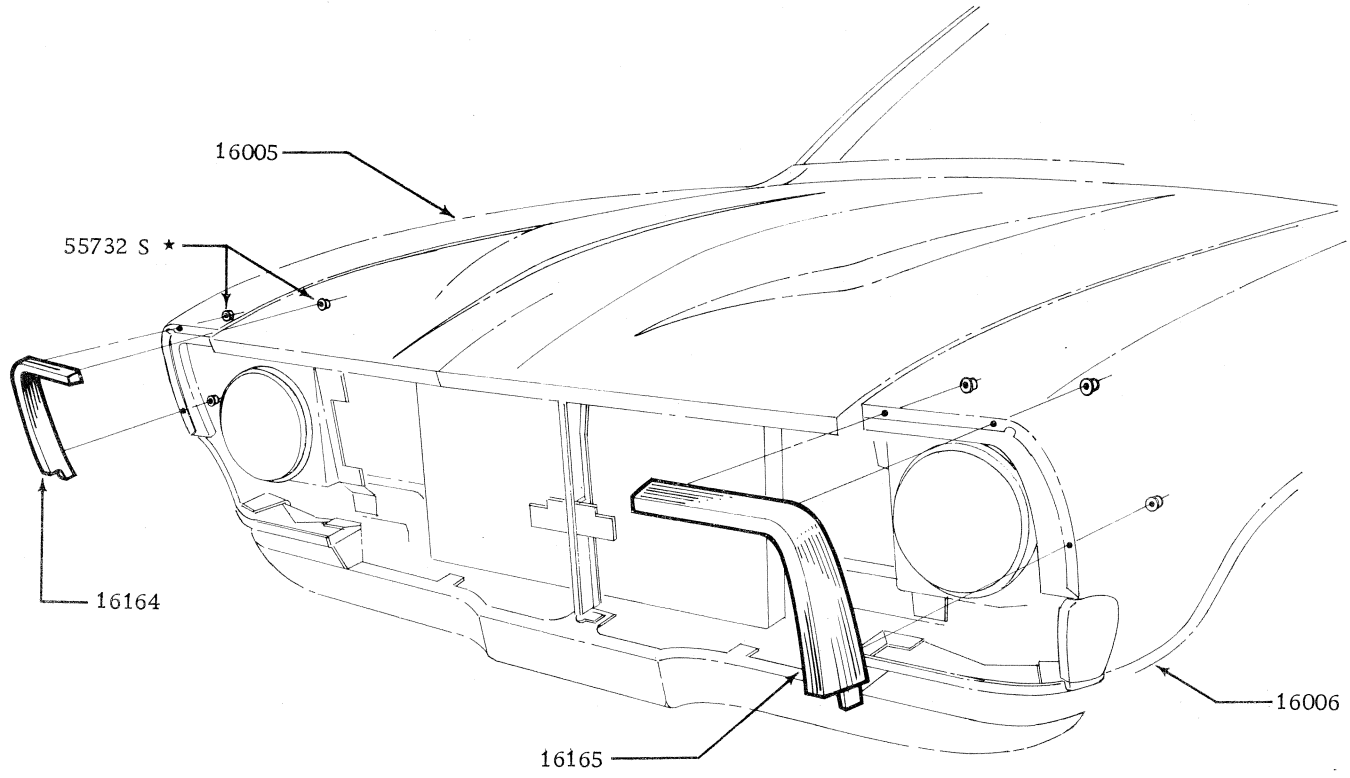

FRONT FENDER MOULDING – XB FALCON

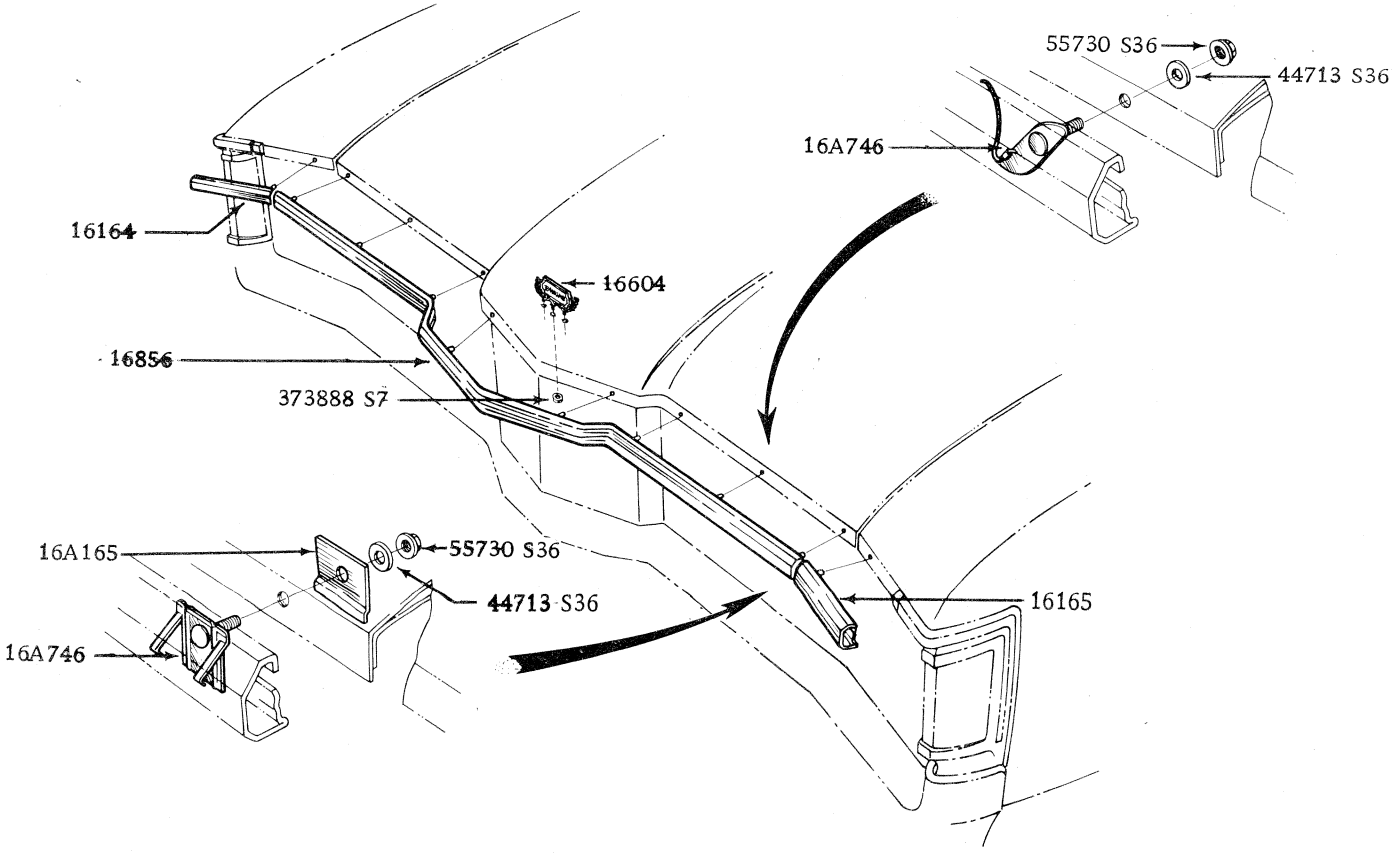

HOOD FRONT EDGE MOULDING – ZG FAIRLANE

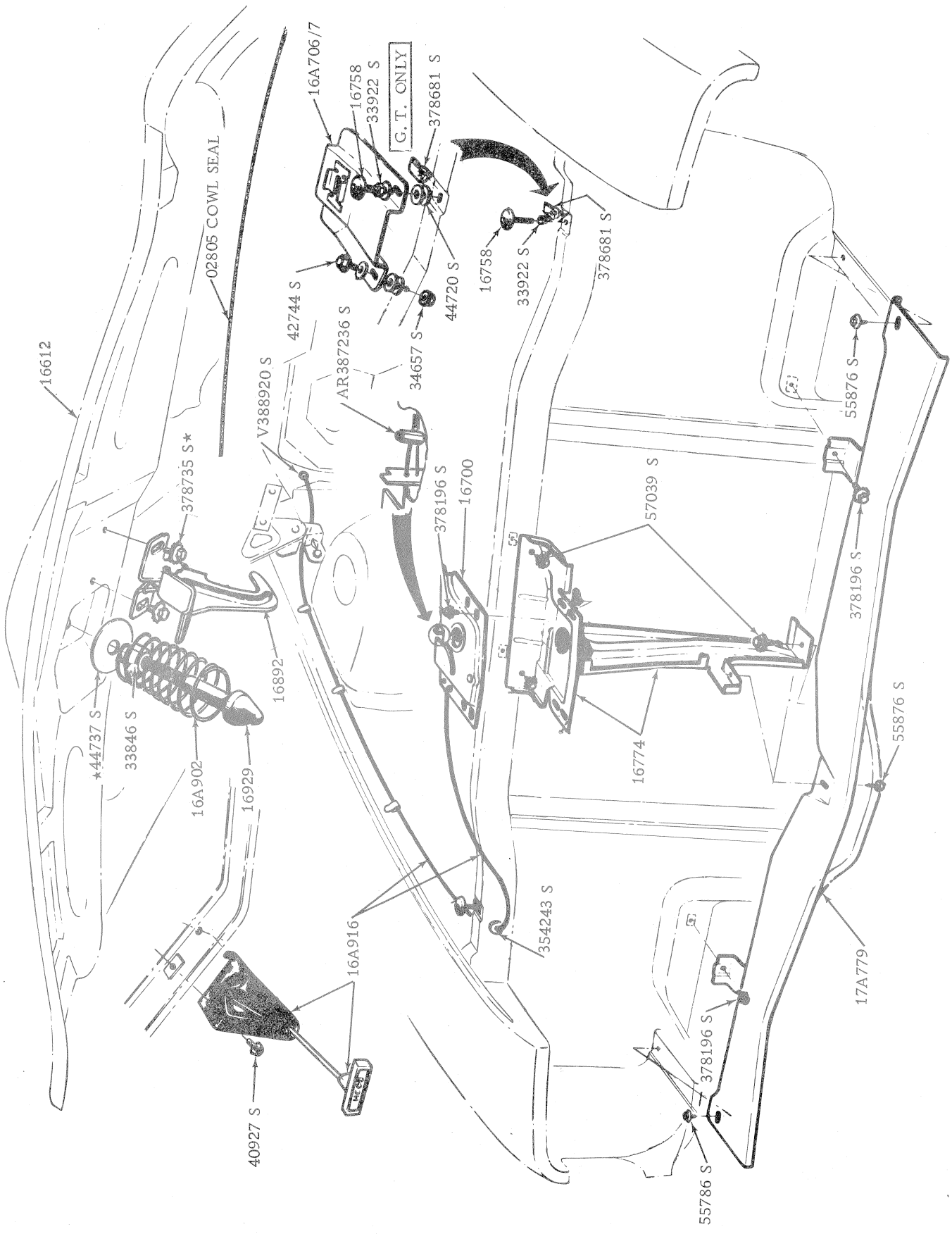

HOOD, LOCK, SUPPORT & RELATED PARTS

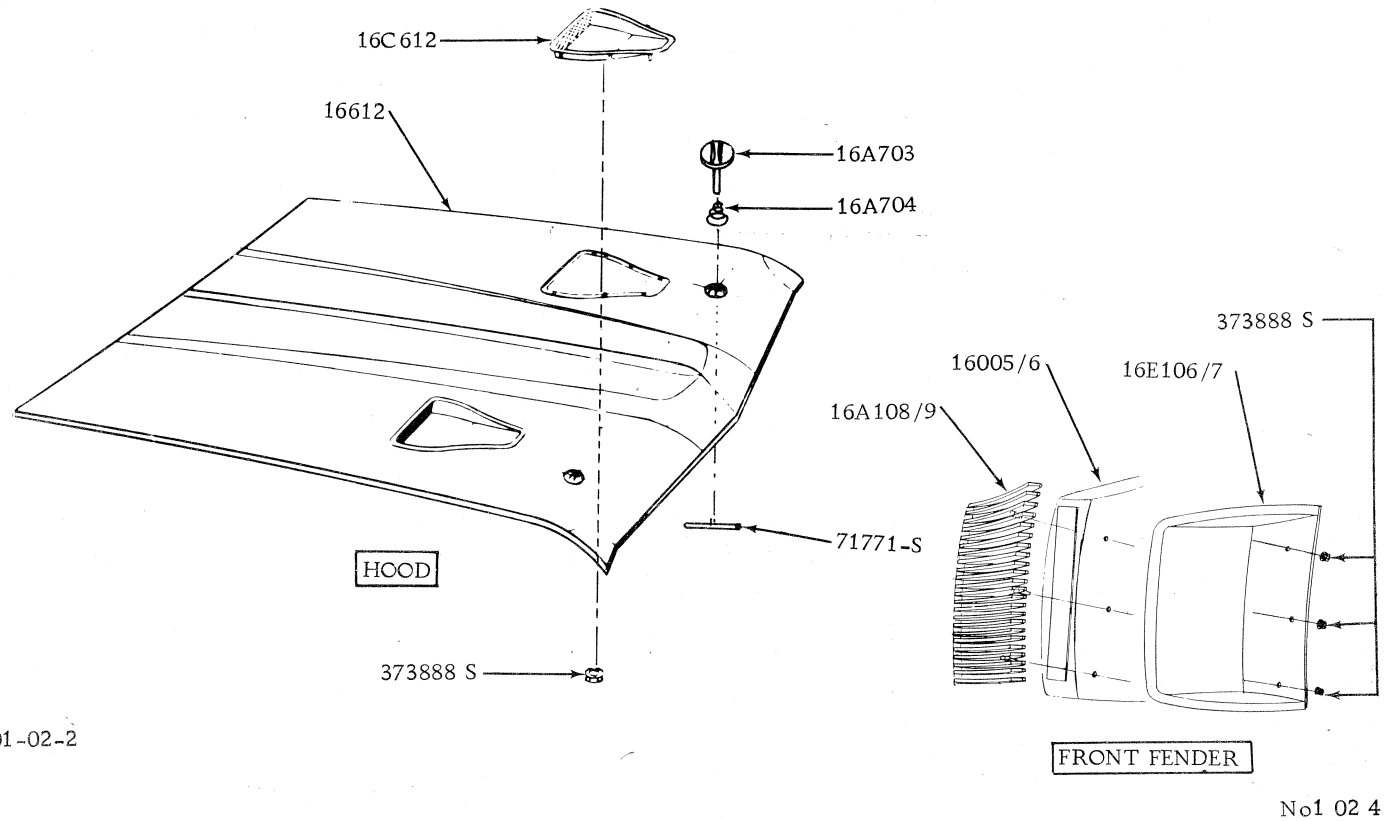

HOOD, LOCKING PINS AND AIR SCOOPS – XA FALCON GT

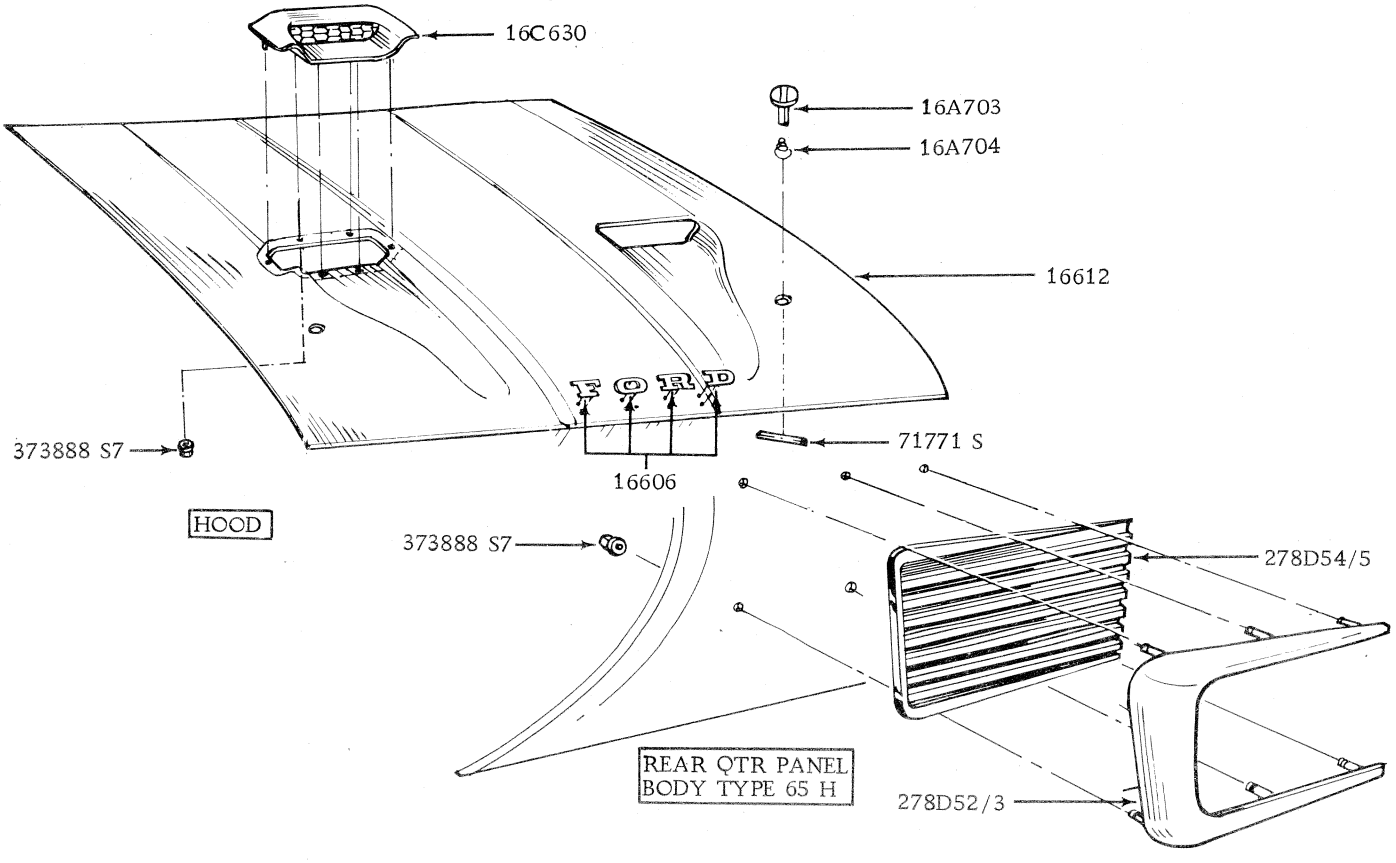

HOOD, LOCKING PINS AND AIR SCOOPS – XB FALCON GT & RALLY PACK

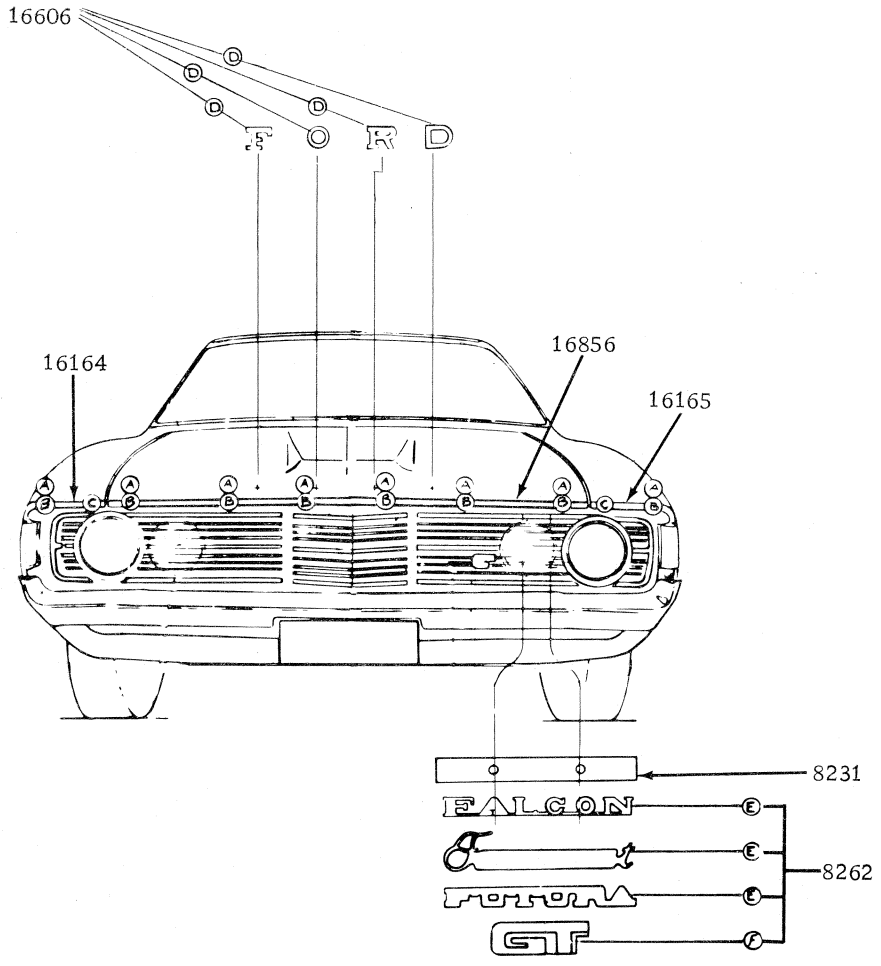

FALCON

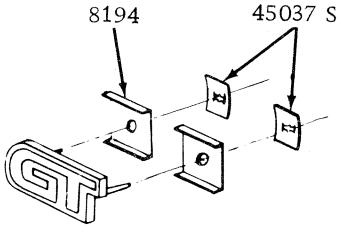

(F)

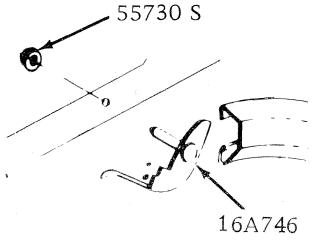

(AB)

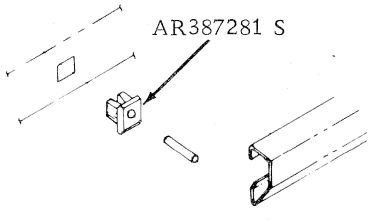

(C)

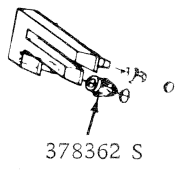

(D)

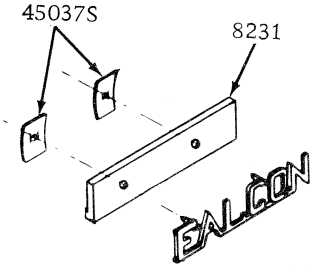

(E)

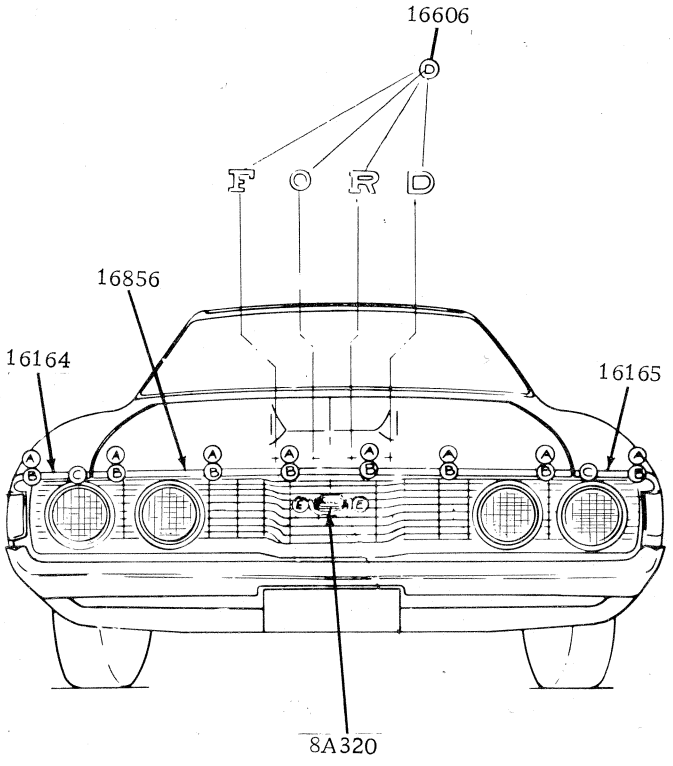

FAIRLANE

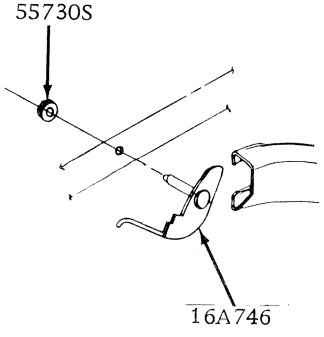

(AB)

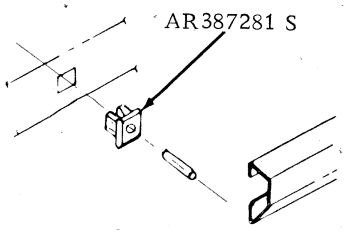

(C)

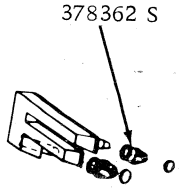

(D)

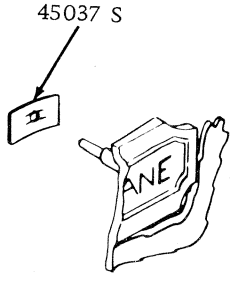

(E)

MODEL	BODY TYPE	REMARKS	UNIT	PART NUMBER		
– – 17A003 – – HOOK ASSY. – JACK						
XA, ZF	All exc. 66, 78		1	XA	17A003	A
XA	66, 78		1	XA	17A003	B
XB, ZG	All exc. 66, 78		1	XB	17A003	A
XB	66, 78		1	XB	17A003	B*
– – 17005 – – BAG ASSY. – JACK						
XA/B, ZF/G	All		1	XW	17005	A
– – 17A012 – – RETAINER – JACK & HANDLE						
XB	71	With aux. rear seat – front	1	XB	17A012	A
XB	71	With aux. rear seat – rear	1	XB	17A012	B
– – 17035 – – WRENCH – JACK HANDLE & WHEEL NUT						
XA/B, ZF/G	All		1	B9MM	17035	A
– – 17080 – – JACK ASSY.						
XA, ZF	54, 65, 71		1	XA	17080	A
XA	66, 78		1	XA	17080	B
XB, ZG	54, 65, 71		1	XB	17080	A
XB	66, 78		1	XB	17080	B
– – 17084 – – COLUMN ASSY. – JACK						
XA, ZF	All		1	XA	17084	A*
XB, ZG	All		1	XB	17084	A*
– – 17088 – – BASE ASSY. – JACK						
XA/B, ZF/G	All		1	XA	17088	A*
– – 17255 – – SPEEDOMETER ASSY. (REFER 17282)						
– – 17L255 – – DRIVE ASSY. – SPEEDOMETER						
XB	54B	Police – OSO-F-6063 – O.N.R.	1	V72DA	17L255	AA
– – 17256 – – LENS – SPEEDO DIAL						
XA/B	All		1	XA	17256	A
– – 17260 – – CABLE ASSY. – SPEEDOMETER						
XA/B	All	6 cyl. – 3 spd man. – B/W 4 spd man. – B/W auto – to 6/74	1	XA	17260	AB
XB	All	6 cyl. – 3 spd man. – B/W 4 spd man. – B/W auto. – from 6/74	1	XB	17260	A
XA/B	All	8 cyl. – 3 spd. man. – B/W 4 spd man.	1	XA	17260	DA
XA/B	All	Ford 4 spd man.	1	XA	17260	EA
XA/B	All	C4 & FMX auto	1	XA	17260	CB
ZF/G	All	6 cyl. – 3 spd man. – B/W auto – to 6/74	1	XA	17260	FA
ZG	All	6 cyl. – 3 spd man. – B/W auto – from 6/74	1	ZG	17260	A
ZF/G	All	C4 & FMX auto	1	XA	17260	G
XB	54B	8 cyl. – manual – long – police – OSO F6062/3	1	V72DA	17260	AA
XB	54B	8 cyl. – manual & auto. – short – police – OSO F6062/3	1	V72DA	17260	BA
XB	54B	8 cyl. – auto. – long – police – OSO G6062/3	1	V72DA	17260	CA
XA,ZF	All	Washer ¼" lock	4	34940 S7		
XA/B, ZF/G	All	Seal "O" ring – driver gear	1	87036 S94		
XA,ZF	All	Bolt – ¼" – 20 x 5/8" – speedo cable to trans. hsing – O.N.R.	1	20824 S36		
– – 17L260 – – PLUG – SPEEDOMETER CABLE TO DASH						
XB	54B	Police – OSO F6063 – O.N.R.	1	V72DA	17L260	AAOSO
– – 17262 – – CABLE – INNER SPEEDO						
XA/B	All	6 cyl. – 3 spd man. – B/W 4 spd man. – B/W auto – to 6/74	1	XA	17262	AB
XB	All	6 cyl. – 3 spd man. – B/W 4 spd man. – B/W auto – from 6/74	1	XB	17262	A
XA/B	All	8 cyl. – 3 spd man. – B/W 4 spd man.	1	XA	17262	D
XA/B	All	Ford 4 spd man.	1	XA	17262	E
XA/B	All	C4 & FMX auto	1	XA	17262	C
ZF/G	All	6 cyl. – 3 spd man. – B/W auto – to 6/74	1	XA	17262	F
ZG	All	6 cyl. – 3 spd man. – B/W auto – from 6/74	1	ZG	17262	A
ZF/G	All	C4 & FMX auto	1	XA	17262	G

MODEL	BODY TYPE	REMARKS	UNIT	PART NUMBER		
— — 17271 — — GEAR — SPEEDOMETER (REFER CHART)						
XA/B, ZF/G	All	16 tooth — orange	1	C2DZ	17271	J
XA/B, ZF/G	All	17 tooth — purple	1	C2DZ	17271	G
XA/B, ZF/G	All	17 tooth — blue	1	XY	17271	A
XA, ZF	All	18 tooth — white	1	C2DZ	17271	F
XA/B, ZF/G	All	18 tooth — purple	1	MG	17271	K
XA/B, ZF/G	All	19 tooth — pink	1	MG	17271	L
XA/B, ZF/G	All	18 tooth — grey	1	C7SZ	17271	B
XA/B, ZF/G	All	19 tooth — tan	1	C7VY	17271	A
XA/B, ZF/G	All	20 tooth — brown	1	B9MM	17271	A
XA/B, ZF/G	All	20 tooth — orange	1	C7AZ	17271	C
XA/B, ZF/G	All	21 tooth — light green	1	MG	17271	R
XA/B, ZF/G	All	21 tooth — purple	1	D00Z	17271	A
XA/B, ZF/G	All	22 tooth — grey	1	MG	17271	N
XA/B, ZF/G	All	23 tooth — black	1	MG	17271	M
— — 17K271 — — WIRING ASSY. — TACHOMETER GROUND						
XA/B	All		1	XA	17K271	AA
— — 17B280 — — WIRING ASSY. — TACHOMETER FEED						
XA/B	All		1	XA	17B280	AA
— — 17282 — — SPEEDOMETER ASSY. — LESS MOUNTING PLATE						
XA	All	Except 54H, 65H and rally pack — miles	1	XA	17255	A
XA	54H, 65H	Also all with rally pack — miles	1	XA	17255	CA
XA	All	Except 54H, 65H, — kilos	1	XA	17255	B
XA	54H, 65H	Kilos	1	XA	17255	DA
XB	All	Except 54H, 65H, and rally pack — to 7/74 — miles	1	XB	17255	A
XB	All	Except 54H, 65H and rally pack — from 7/74 — kilos	1	XB	17255	F
XB	All exc. 54H, 65H	Kilos — Sth. Africa, Singapore, Indonesia, Thailand	1	XB	17255	DA
XB	54H, 65H	Also all with rally pack — to 7/74 — miles	1	XB	17255	B
XB	54H, 65H	Also all with rally pack — from 7/74 — kilos	1	XB	17255	G
XB	54H, 65H	Kilos — Sth. Africa	1	XB	17255	CA
ZF/G	All	Miles	1	ZF	17282	A
ZF	All	Kilos	1	ZF	17282	B
ZG	All	Kilos	1	ZG	17282	A
XB	54B	Police — OSO-F-6062/3 — inst. panel — m.p.h. — O.N.R.	1	V72DA	17255	AA
XB	54B	Police — OSO-F-6063 — glovebox — m.p.h.	1	V72DA	17255	BAOSO
XB	54B	Police — OSO-F-6062/3 — inst. panel — k.p.h.	1	V74DA	17255	AAOSO
XB	54B	Police — OSO-F-6062/3 — glovebox — k.p.h.	1	V74DA	17255	BAOSO
— — 17285 — — GEAR — SPEEDO DRIVE (REFER SECTIONS 70A & 70B)						
— — 17288 — — SPACER — SPEEDO GEAR DRIVE						
XA/B	All	250 c.i.d. 1V — auto. trans.	1	XA	17288	A
— — 17292 — — RETAINER — SPEEDOMETER DRIVEN GEAR						
XA/B, ZF/G	All		1	C1DD	17292	A
— — 17A299 — — WIRING ASSY. — TACHOMETER						
XA/B	All	6 cyl. — rally pack only	1	XA	17A299	A
— — 17A301 — — SPACER — SPEEDOMETER MOUNTING						
XB	54B	Police — OSO-F-6063	3	V72DA	17A301	AA
— — 17K317 — — GASKET — SPEEDOMETER DIAL						
XA/B	All		1	XA	17K317	A
— — 17360 — — TACHOMETER ASSY.						
XA/B	All	6 cyl.	1	XA	17360	CA
XA/B	All	8 cyl.	1	XA	17360	B
— — 17C430 — — GASKET — WINDSHIELD WIPER MOTOR SEAL						
XA/B, ZF/G	All	Preslite	1	XT	17C430	A
XA, ZF	All	Lucas	1	XW	17C430	B
— — 17A431 — — HOUSING ASSY. — WIPER MOTOR GEAR						
XA/B, ZF/G	All	Preslite	1	XA	17A431	A
— — 17C431 — — GROMMET ASSY. — WINDSHIELD WIPER MOTOR MOUNTING BRACKET						
XA/B, ZF/G	All	Preslite	3	C60F	17C431	A
— — 17A434 — — GEAR & SHAFT ASSY. — WIPER OUTPUT						
XA/B, ZF/G	All	Preslite	1	XA	17A434	A
XA, ZF	All	Lucas — to 12/72	1	XA	17A434	B
XA, ZF	All	Lucas — from 12/72	1	XA	17A434	C

MODEL	BODY TYPE	REMARKS	UNIT	PART NUMBER
– – 17A436 – – ARM ASSY. – WINDSHIELD WIPER OUTPUT				
XA/B, ZF/G	All	Preslite	1	XA 17A436 A
XA, ZF	All	Lucas – from 12/72	1	XA 17A436 B
– – 17A485 – – ARMATURE ASSY. – WIPER MOTOR				
XA/B, ZF/G	All	Preslite	1	XA 17A485 B
XA, ZF	All	Lucas – to 11/72	1	XW 17A485 B
XA, ZF	All	Lucas – from 11/72	1	XA 17A485 C
XA/B, ZF/G	All	Ball – Preslite	1	371350 S
– – 17A486 – – PAD WIPER – ARMATURE THRUST				
XA/B, ZF/G	All	Preslite	1	XR 17A486 A
– – 17A487 – – CONE – ARMATURE THRUST				
XA/B, ZF/G	All	Preslite – from 11/72	1	CH 17A487 A
– – 17A499 – – BLOCK ASSY. – WIPER MOTOR TERMINAL				
XA/B, ZF/G	All	Preslite	1	XW 17A499 A
XA/B, ZF/G	All	Lucas	1	XA 17A499 A

MODEL	BODY TYPE	REMARKS	UNIT	PART NUMBER	
– – 17504/08 – – MOTOR ASSY. – WINDSHIELD WIPER					
XA,ZF	All	Lucas – to 11/72 – for assy. replacement use XA 17508 C	1	XA 17508	B
XA/B, ZF/G	All	Preslite – ident. 72DA 17504 A1B	1	XA 17508	C
XA,ZF	All	Lucas from 11/72 – ident. 72DA 17504 A2B – assy. not serviced use XA 17508 C for replacement	1	17508	
XA,ZF	All	Screw – cover fixing – Lucas	1	V 387845 S	
XA,ZF	All	Screw – thrust assy. – Lucas	1	V 387848 S	
XA/B, ZF/G	All	Screw & washer – No. 10 – 24, motor assy. to cowl top	3	380541 S7	
– – 17A504 – – CLIP – WIPER ARM PIVOT					
XA/B, ZF/G	All	R.H. – domestic	1	XA 17A504	A
– – 17A511 – – PUMP ASSY. – WINDSCREEN WASHER					
XA,ZF	All	Lucas	1	XW 17A511	B
XA/B, ZF/G	All	Preslite	1	XA 17A511	A
– – 17B511 – – KIT – WINDSCREEN WASHER & VALVES					
XA/B, ZF/G	All	Preslite	1	XA 17B511	A
XA,ZF	All	Lucas	1	XA 17B511	B
– – 17526/7 – – ARM ASSY. – WINDSHIELD WIPER					
XA,ZF	All exc 65	R.H. – domestic – to 10/72	1	AWU 49	
XA/B, ZF/G	All exc. 65	R.H. – domestic – from 10/72	1	AWU 35	
XA/B, ZF/G	All exc. 65	L.H. – domestic	1	AWU 34	
XA/B, ZF/G	All exc. 65	R. & L.H. – export	2	AWU 34	
XA	65	R.H. – domestic – to 10/72	1	AWU 44	
XA/B	65	R.H. – domestic – from 10/72 to 11/72	1	AWU 50	
XA/B	65	R.H. – domestic – from 11/72	1	AWU 51	
XA	65	L.H. – domestic – to 11/72	1	AWU 43	
XA	65	R.H. & L.H. – export – to 11/72	2	AWU 43	
XA/B	65	L.H. – domestic – from 11/72	1	AWU 52	
XA/B	65	R.H. & L.H. – export – from 11/72	2	AWU 52	
– – 17B527 – – PIN – WINDSHIELD WIPER BLADE TO ARM					
XA/B, ZF/G	All		1	XA 17B527	A
– – 17528 – – BLADE ASSY. – WINDSHIELD WIPER					
XA/B, ZF/G	All		2	AWW 27	
– – 17531 – – CLIP – WINDSHIELD WIPER ADAPTOR & CONNECTING ARM					
XA/B, ZF/G	All		3	C5ZZ 17531	A
– – 17532/3 – – ARM & PIVOT ASSY. – WINDSHIELD WIPER (REFER GROUP 17566)					
– – 17533 – – ROTARY LINK – WINDSHIELD WIPER					
XA,ZF	All	Lucas	1	XA 17533	B
– – 17540 – – ARM ASSY. – WIPER CONTROL					
XA/B, ZF/G	All	R.H. pivot to motor – to 10/74	1	XA 17540	A
XB,ZG	All	R.H. pivot to motor – from 10/74	1	XB 17540	A*
XA/B, ZF/G	All	R.H. pivot to L.H. pivot – to 10/74	1	XA 17540	B
XB,ZG	All	R.H. pivot to L.H. pivot – from 10/74	1	XB 17540	B*
– – 17543 – – HOSE – WINDSHIELD WASHER BULK					
XA/B, ZF/G	All	15' long x 7/32 I.D.	1	C8AZ 17543	B
– – 17B550 – – WASHER – GEAR SHAFT SPACER					
XA/B, ZF/G	All	Preslite – O.N.R.	2	ARC4DF 17B550	A
– – 17A553 – – SWITCH ASSY. – WINDSHIELD WIPER					
XA/B, ZF/G	All		1	XA 17A553	AA
– – 17566 – – PIVOT ASSY. – WINDSHIELD WIPER					
XA,ZF	All exc. 65	R.H. – plus (1) AWU 35 – to 10/72	1	XA 17566	A
XA	65	R.H. – plus (1) AWU 50 – to 10/72	1	XA 17566	A
XA/B, ZF/G	All	R.H. – from 10/72 to 10/74	1	XA 17566	A
XB,ZG	All	R.H. – from 10/74	1	XB 17566	A*
XA,ZF	All	L.H. – to 10/72	1	XA 17533	AA
XA/B, ZF/G	All	L.H. – from 10/72	1	XA 17533	C
XA/B, ZF/G	All	Screw & washer – No. 10 – 24 x .44" – arm & pivot assy. to panel assy.	6	375921 S2	

MODEL	BODY TYPE	REMARKS	UNIT	PART NUMBER	
– – 17B566 – – BRUSH & TERMINAL ASSY. – WIPER MOTOR					
XA,ZF	All	Lucas	1	XA	17B566 A
XA/B, ZF/G	All	Preslite	3	XR	17B566 B
– – 17A567 – – BRUSH – GEAR WIPER MOTOR					
XA,ZF	All	Lucas	1	XA	17A567 A
– – 17B567 – – BRUSH – SPRING SET WIPER MOTOR					
XA,ZF	All	Lucas	1	XA	17B567 A
– – 17B571 – – MOTOR & PUMP ASSY. – WINDSHIELD WIPER					
XA,ZF	All	Preslite	1	XA	17B571 A
XA,ZF	All	Lucas	1	XA	17B571 B
– – 17B583 – – PLATE ASSY. – WIPER MOTOR BRUSH					
XA,ZF	All	Lucas – from 12/72	1	XA	17B583 A
– – 17B584 – – CUP & MAGNET ASSY. – WIPER MOTOR					
XA/B, ZF/G	All	Preslite	1	XA	17B584 A
XA,ZF	All	Lucas	1	XW	17B584 B
– – 17A585 – – BEARING – DRIVESHAFT – WIPER MOTOR					
XA,ZF	All	Lucas	1	XA	17A585 A
– – 17B585 – – BEARING SET – WIPER MOTOR					
XA,ZF	All	Lucas	1	XW	17B585 B
– – 17593 – – BLADE – WINDSCREEN WIPER LESS FRAME					
XA/B, ZF/G	All	16"	2	AWV 16	
– – 17B599 – – SPRING – BRUSH					
XA/B, ZF/G	All	Preslite	3	XR	17B599 A
– – 17601 – – CONNECTOR – WINDSHIELD WASHER HOSE					
XA/B, ZF/G	All		1	PL	17601 B
– – 17A605 – – HOSE – WINDSHIELD WASHER					
XA/B, ZF/G	All	Pump to reservoir – to 12/74	1	XA	17A605 D
XB,ZG	All	Pump to reservoir – from 12/74	1	XB	17A605 D*
XA,ZF	All	To R.H. jet	1	XA	17A605 E
XB,ZG	All	To R.H. jet – to 1/74	1	XA	17A605 E
XB,ZG	All	To R.H. jet – from 1/74 to 10/74	1	XB	17A605 B
XB,ZG	All	To R.H. jet – from 10/74	1	XB	17A605 BC*
XA,ZF	All	To L.H. jet – to 12/72	1	XA	17A605 CA
XA,ZF	All	To L.H. jet – from 12/72	1	XA	17A605 F
XB,ZG	All	To L.H. jet – to 1/74	1	XA	17A605 F
XB,ZG	All	To L.H. jet – from 1/74	1	XB	17A605 C
– – 17K608 – – FILTER WASHER – WINDSHIELD PICK UP TUBE					
XA/B, ZF/G	All		1	XA	17K608 A
– – 17618 – – RESERVOIR – WINDSHIELD WASHER					
XA,ZF	All		1	XA	17618 AA
XB,ZG	All	To 12/74	1	XB	17618 AB
XB,ZG	All	From 12/74	1	XB	17618 AC*
– – 17626 – – PANEL – FRONT VALANCE					
XA,ZF	All		1	XA	17626 A
ZG	All		1	XA	17626 A
XB	All		1	XB	17626 A
XA/B, ZF/G	All	Screw & washer – 5/16" – 18 x .94	a/r	57039 S2	
XA/B, ZF/G	All	Nut – plastic – attach number plate	4	380344 S	
– – 17651 – – BRACKET – WINDSHIELD WASHER RESERVOIR MOUNTING					
XB,ZG	All	From 12/74	1	XB	17651 A*
– – 17666 – – JET ASSY. – WINDSHIELD WASHER					
XA/B, ZF/G	All	R.H. – to 1/74	1	XA	17666 AA
XA/B, ZF/G	All	L.H. – to 1/74	1	XA	17666 BA
XB,ZG	All	From 1/74	2	XB	17666 A

MODEL	BODY TYPE	REMARKS	UNIT	PART NUMBER		
– – 17B676 – – MIRROR ASSY. – REAR VIEW EXTERIOR – REMOTE CONTROL						
XA/B, ZF/G	54, 71	R.H. – O.R.C., (1) XA 17C720 B, (1) EJ 17A702 A, (2) V 388191 S36 (2) V 388196 S36	1	XA	17B676	AP
XA/B	65, 66, 78	R.H. – O.R.C. (1) EJ 17A702 A, (1) XA 17C720 C, (2) V 388191 S36, (2) V 388196 S36	1	XA	17B676	CP
XA/B, ZF/G	All	Nut & washer – ¼" – 20 mirror to door	2	55734 S2		
XA/B, ZF/G	All	Stud – ¼" – 20 x 2.25" – mirror to door	2	V 388191 S36		
XA/B, ZF/G	All	Stud – ¼" – 20 x 1.00" – mirror to door	2	V 388196 S36		
– – 17682/3 – – MIRROR ASSY. – REAR VIEW EXTERIOR (ALSO REFER 17B676 & 18402)						
XA/B, ZF/G	All	R.H. – manual control – O.R.C. (1) EJ 17A702A, (1) XA 17C720 AA, (2) V 388191 S36, (2) V 388196 S36	1	XA	17682	AP
XA/B, ZF/G	All	L.H. – manual control O.R.C. (1) EJ 17A703 A, (1) XA 17C720 AA, (2) V 388191 S36, (2) V 388196 S36	1	XA	17683	AP
XA	All	Use with OSO G1014 position 20 in forward and symm. with R.H. mirror – O.N.R.	1	XA	17683	AWOSO
– – 17A682 – – MIRROR ASSY. – REAR VIEW EXTERIOR (REFER 17682/3)						
– – 17B685 – – ESCUTCHEON – MIRROR REAR VIEW						
XA/B, ZF/G	All	With remote control mirror	1	XA	17B685	A
– – 17A688 – – SPACER – DUAL DOOR MOUNTING						
XA/B, ZF/G	All		1/2	CH	17A688	A
– – 17698 – – BRACKET – REAR VIEW INTERIOR MIRROR						
XA/B, ZF/G	All		1	C9AZ	17698	A
– – 17700 – – MIRROR ASSY. – REAR VIEW INTERIOR						
XA/B, ZF/G	All	Non-prismatic	1	XA	17700	A
XA/B, ZF/G	All	Prismatic	1	CH	18402	A
– – 17A702/3 – – BODY ASSY. – REAR VIEW MIRROR EXTERIOR						
XA/B, ZF/G	All	R.H.	1	EJ	17A702	A
XA/B, ZF/G	All	L.H.	1	EJ	17A703	A
– – 17C720 – – BACK ASSY. – REAR VIEW MIRROR – EXTERIOR						
XA/B, ZF/G	All	Exc. remote control	1/2	XA	17C720	AA
XA/B, ZF/G	All	Remote control – includes cable & control assy. – approx. 13" long	1	XA	17C720	B
XA/B, ZF/G	All	Remote control – includes cable & control assy. – approx. 24" long	1	XA	17C720	C
XA/B, ZF/G	All	Remote control – includes cable & control assy. – approx. 38" long	1	XA	17C720	A
– – 17725 – – GASKET – REAR VIEW MIRROR OUTSIDE						
XA	All	Use with OSO G1014 – O.N.R.	1	XA	17725	AOSO
– – 17727 – – BRACKET – REAR VIEW MIRROR						
XA/B, ZF/G	54A,B,C,E, 71A,B		1	XA	17727	A
XA/B, ZF/G	54D,G,H. 65B, D,H, 71D,66,78		1	XA	17727	B
– – 17A736 – – CONTROL ASSY. – REMOTE CONTROL MIRROR						
XA,ZF	All	Serviced only as part of 17C720 assy.	1		17A736	
– – 17C754/5 – – REINFORCEMENT ASSY. – REAR BUMPERETTE SIDE INNER						
XA/B	66, 78	R.H.	1	XA	17C754	A
XA/B	66, 78	L.H.	1	XA	17C755	A
– – 17757 – – BAR – FRONT BUMPER IMPACT						
XA	All		1	XA	17757	ARB
ZF/G	All		1	ZF	17757	ARB
XB	All exc. 54H,65H		1	XB	17757	ARB
XB	54H,65H	Colour white – paint to suit	1	XB	17757	BRB
– – 17758 – – BOLT – BUMPER RETAINING						
XA,ZF	All		10	383465 S100		
XB,ZG	All exc. 54H,65H		10	383465 S100		
XB	54H, 65H	Colour white – paint to suit	10	XB	17758	A

MODEL	BODY TYPE	REMARKS	UNIT	PART NUMBER		
-- 17C758/9 -- REINFORCEMENT ASSY. - REAR BUMPERETTE - PILLAR TO QTR.						
XA/B	66, 78	R.H.	1	XA	17C758	A
XA/B	66, 78	L.H.	1	XA	17C759	A
-- 17B760/1 -- BRACKET - FRONT BUMPER MOUNTING OUTER						
XA, ZF/G	All	R.H.	1	XA	17B760	A
XB	All	R.H.	1	XB	17B760	A
XA,ZF/G	All	L.H.	1	XA	17B761	A
XB	All	L.H.	1	XB	17B761	A
-- 17C762/3 -- BUMPER ASSY. - TAILGATE TO BUMPERETTE						
XA/B	66, 78	R.H.	1	XA	17C762	AA
XA/B	66, 78	L.H.	1	XA	17C763	AA
-- 17C764/5 -- REINFORCEMENT ASSY. - BUMPERETTE SIDE OUTER						
XA/B	66, 78	R.H.	1	XA	17C764	A
XA/B	66, 78	L.H.	1	XA	17C765	A
-- 17766/7 -- ARM ASSY. - FRONT BUMPER						
XA,ZF/G	All	R.H. - inc's inner & outer arms	1	XA	17766	C
XA,ZF/G	All	L.H. - inc's inner & outer arms	1	XA	17767	C
XB	All	R.H. - outer	1	XB	17754	A
XB	All	L.H. - outer	1	XB	17755	A
XB	All	R.H. - inner	1	XB	17766	A
XB	All	L.H. - inner	1	XB	17767	A
XA/B, ZF/G	All	Bolt - ½" - 13 x 1.50" - arm to body	4	375395 S2		
XA/B, ZF/G	All	Nut - 3/8" - 16 lock att. bar (17757) to reinf. (17589) - not serviced to arm (17766/7) to bracket (17B760/1)	6	34419 S2		
XA/B, ZF/G	All	Nut & retainer - arm to bracket	4	V 388050 S2		
-- 17B769 -- DEFLECTOR ASSY. - FRONT BUMPER AIR LOWER						
XA/B	All		1	XA	17B769	A
XA/B	All	Screw	4	31498 S2		
XA/B	All	Screw	6	57306 S2		
XA/B	All	Nut	6	55734 S2		
-- 17776/7 -- BAR - REAR BUMPERETTE						
XA/B	66	R.H.	1	XA	17776	A
XA/B	78	R.H.	1	XA	17776	B
XA/B	66	L.H.	1	XA	17777	A
XA/B	78	L.H.	1	XA	17777	B
-- 17779 -- DEFLECTOR ASSY. - FRONT BUMPER STONE (REFER 17A779)						
-- 17A779 -- DEFLECTOR - FRONT BUMPER STONE						
XA	All		1	XA	17A779	A
XB	All		1	XB	17779	A
ZF/G	All		1	ZF	17A779	A
XA/B, ZF/G	All	Screw - 5/16" - deflector to radiator supt.	a/r	378196 S40		
XA/B, ZF/G	All	Screw - ¼ - 20 x .62" - deflector to front fender & hood lock support	3	55876 S2		
XA/B, ZF/G	All	Nut & washer - ¼" - 20 deflector to front valance (2) & front fender (4)	6	55734 S2		
XB	All	Clip - deflector retaining	8	V 388475 S36*		
-- 17787/8 -- ARM - REAR BUMPER INNER						
XA/B, ZF/G	54, 65, 71	R.H.	1	XA	17787	A
XA/B	66, 78	R.H.	1	XA	17787	B
XA/B, ZF/G	54,65,71	L.H.	1	XA	17788	A
XA/B	66, 78	L.H.	1	XA	17788	B
-- 17A792 -- REINFORCEMENT - FRONT BUMPER IMPACT						
XA	All		1	XA	17A792	A
XB	All		1	XB	17A792	A
ZF/G	All		1	ZF	17A792	A
XA/B, ZF/G	All	Nut & retainer - reinforcement to arm	2	V 388050 S2		
-- 17B794/5 -- BRACKET - FRONT BUMPER GUARD						
XA,ZF/G	All	Upper	2	XA	17B794	AA
XB	All	Upper	2	XB	17B794	A
XA,ZF/G	All	Lower	2	XA	17B795	AA
XB	All	Lower	2	XB	17B795	A

MODEL	BODY TYPE	REMARKS	UNIT	PART NUMBER	
– – 17795/6 – – ARM ASSY. – REAR BUMPER OUTER					
XA/B, ZF/G	54,65,71	R.H.	1	XA	17795 A
XA/B, ZF/G	54,65,71	L.H.	1	XA	17796 A
XA/B	66, 78	R.H.	1	XA	17795 B
XA/B	66, 78	L.H.	1	XA	17796 B
– – 17808 – – DEFLECTOR – REAR BUMPER STONE					
XA,ZF	54,65		1	XA	17808 A
XB	65		1	XA	17808 A
ZG	All		1	XA	17808 A
XB	54		1	XB	17808 A
XA/B	71		1	XA	17808 B
– – 17A820/1 – – BRACKET ASSY. – FRONT BUMPER MOUNTING – END					
XB	All	R.H.	1	XB	17A820 A
XB	All	L.H.	1	XB	17A821 A
– – 17C856 – – BRACKET – REAR BUMPER GUARD LOWER					
XA/B	54, 65		2	XA	17C856 A
XA/B	71		2	XA	17C856 B
ZF/G	All		2	ZF	17C856 A
– – 17B862/3 – – REINFORCEMENT – REAR BUMPER MOUNTING BRACKET					
XA/B	54,65		2	XA	17B862 A
ZF/G	All		2	ZF	17B862 A
– – 17B876 – – BRACKET – REAR BUMPER GUARD UPPER					
XA/B	54, 65		2	XA	17B876 A
XA/B	71		2	XA	17B876 B
ZF/G	All		2	ZF	17B876 A
– – 17906 – – BAR – REAR BUMPER IMPACT					
XA	54,65		1	XA	17906 ARB
XB	65B,D		1	XA	17906 ARB
XA/B	71		1	XA	17906 BRB
XB	54A,B,C,D		1	XB	17906 ARB
XB	54H	Colour white – paint to suit	1	XB	17906 BRB
XB	65H	Colour white – paint to suit	1	XB	17906 CRB
ZF/G	All		1	ZF	17906 ARB
– – 17B907 – – INSULATOR – FRT. & REAR BUMPER GUARD					
XA/B, ZF/G	All	Cut to suit	a/r	XA	17B907 A
– – 17912 – – REINFORCEMENT – REAR BUMPER IMPACT					
XA/B, ZF/G	54,65,71		1	XA	17912 A
– – 17A924 – – SPACER – FRONT & REAR BUMPER					
XA/B, ZF/G	All	Att. 17757 to 17766/7 (2), att. 17757 to 17B760 (2), att. 17906 to 17A867/8 (2), att. 17906 to 17912 (2), att. 17906 to 17A971/2 (4)	12	C4ZB	17A924 A
– – 17A950/1 – – PLATE – REAR BUMPER ARM MOUNTING					
XA/B	71	R.H.	1	XA	17A950 A
XA/B	71	L.H.	1	XA	17A951 A
– – 17984 – – GUARD ASSY. – REAR BUMPER					
XA/B	54, 65		2	XA	17984 A
XA/B	71		2	XA	17984 B
ZF/G	All		2	ZF	17984 A
– – 17996 – – GUARD ASSY. – FRONT BUMPER					
XA,ZF/G	All		2	XA	17996 A
XB	All	R.H.	1	XB	17996 A
XB	All	L.H.	1	XB	17997 A

MODEL	BODY TYPE	REMARKS	UNIT	PART NUMBER

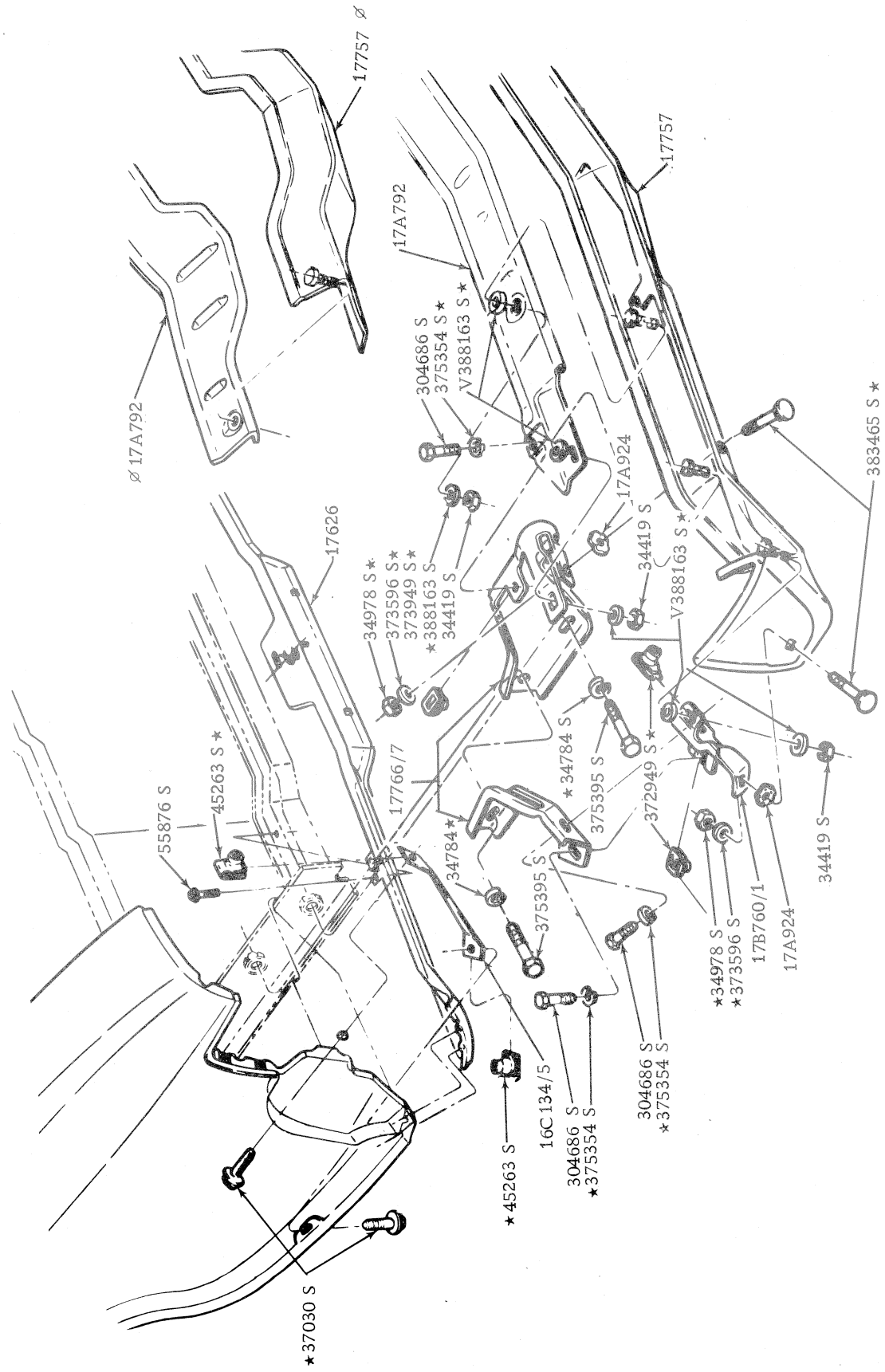

FRONT BUMPER BAR

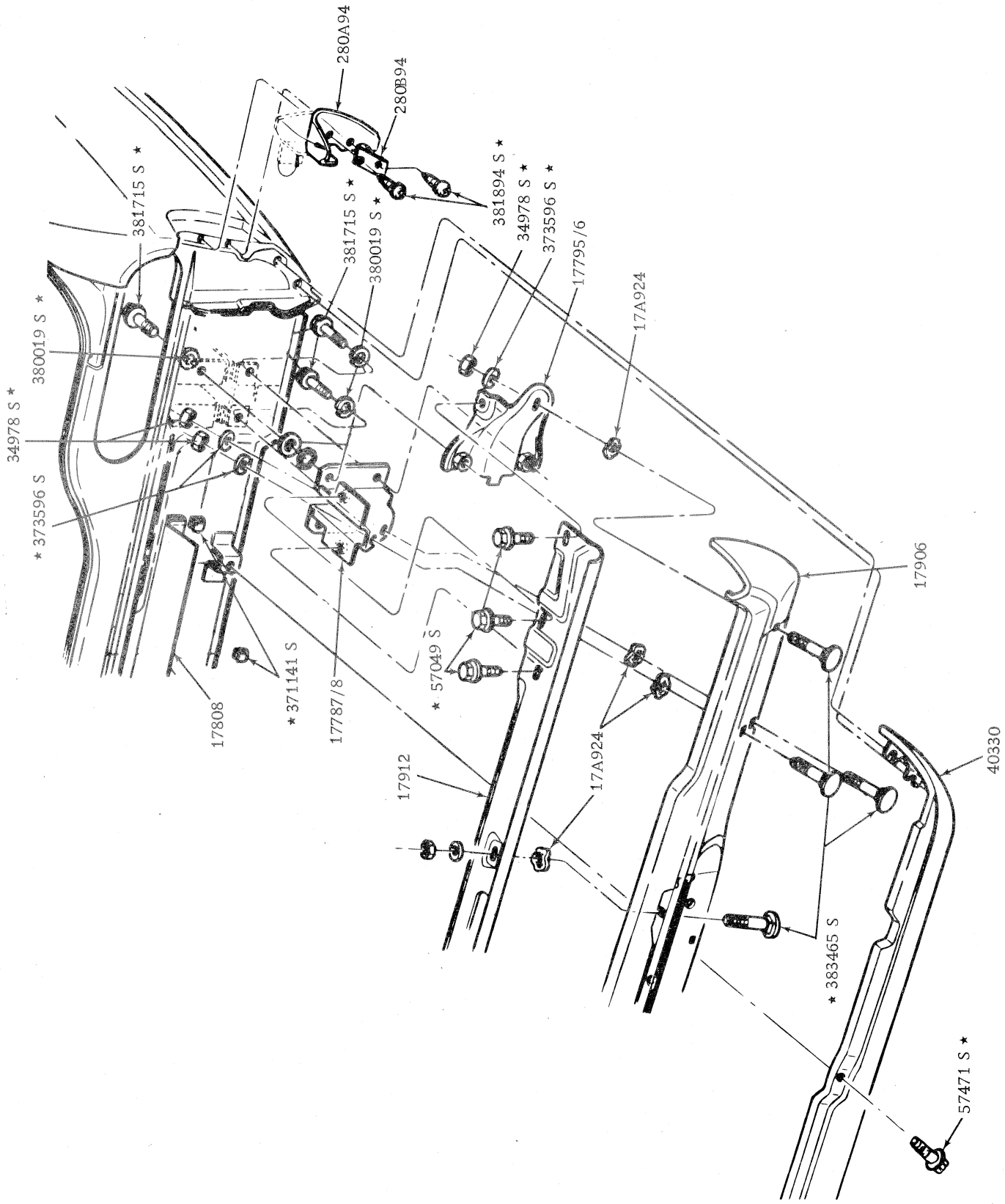

REAR BUMPER BAR SEDAN

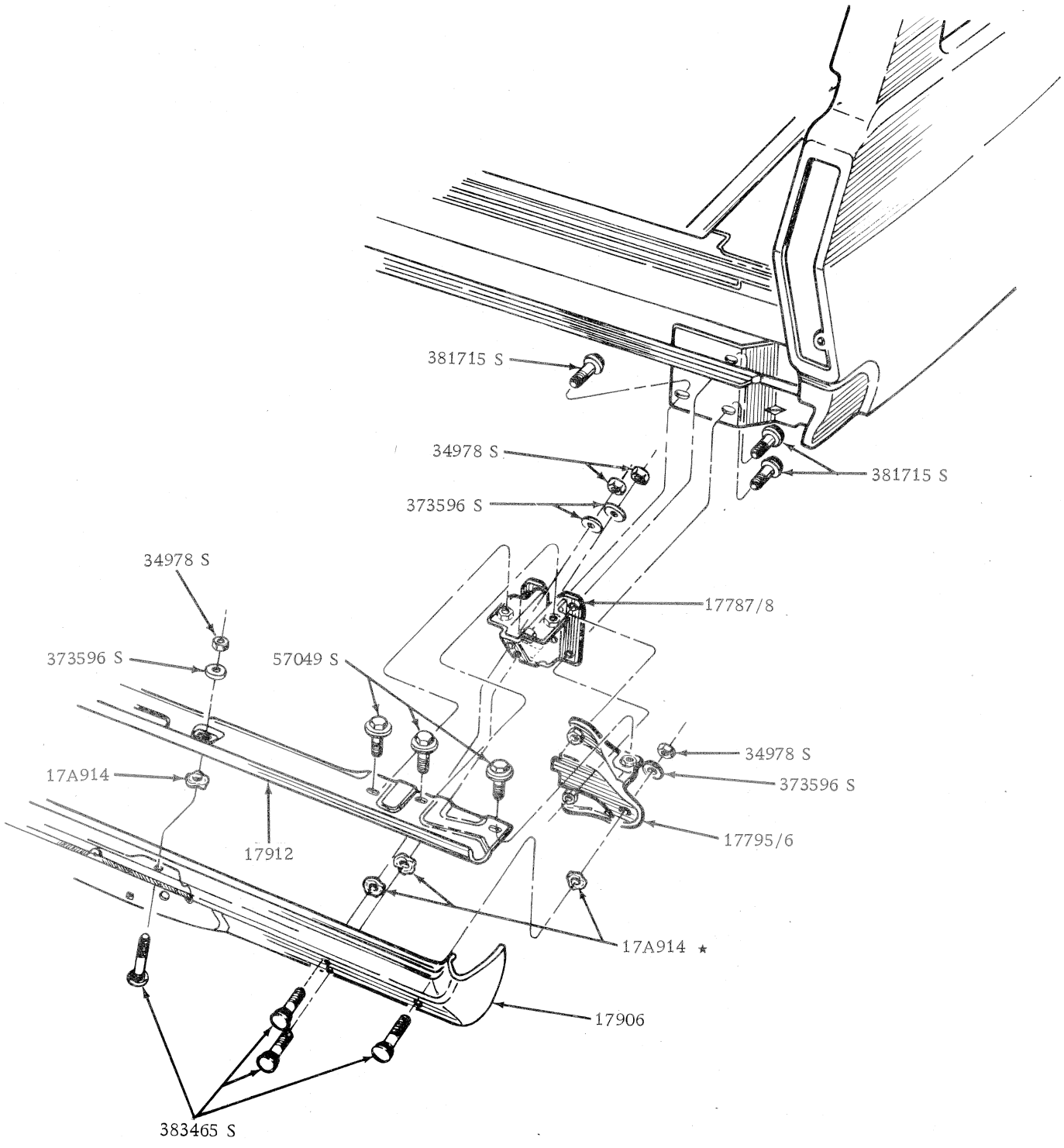

REAR BUMPER BAR WAGON

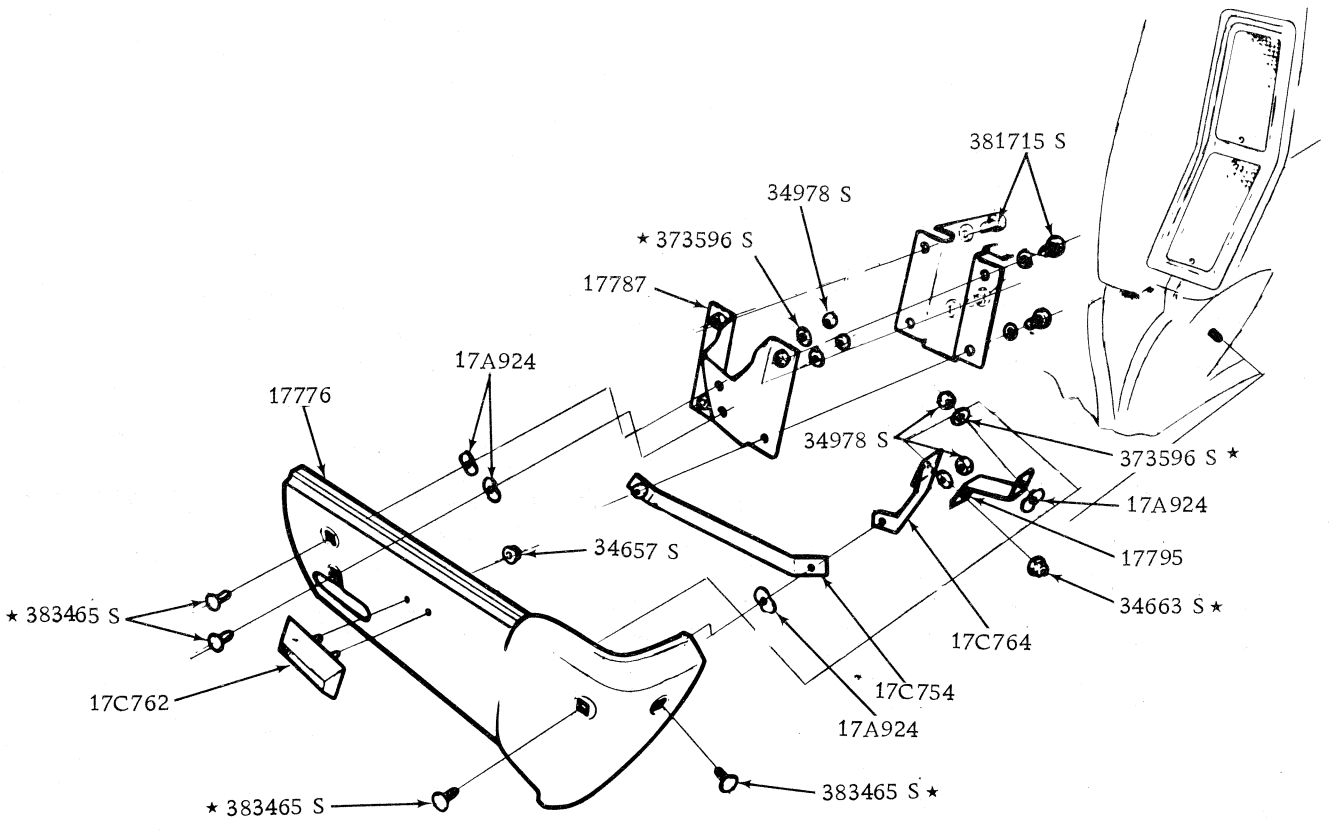

REAR BUMPERETTE (UTE & VAN)

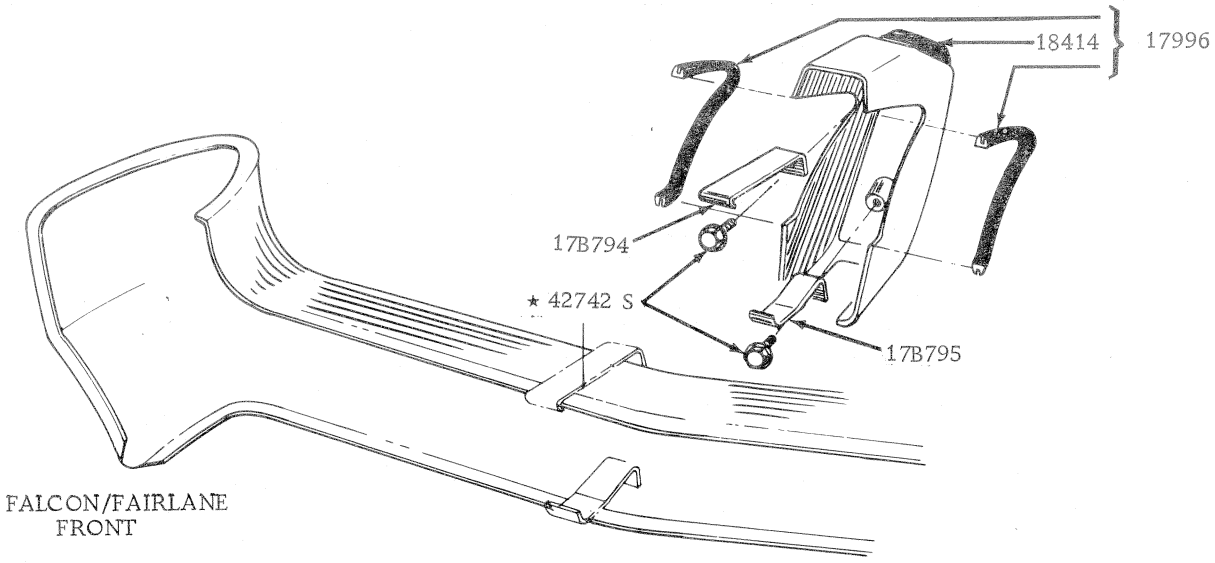

FALCON/FAIRLANE
FRONT

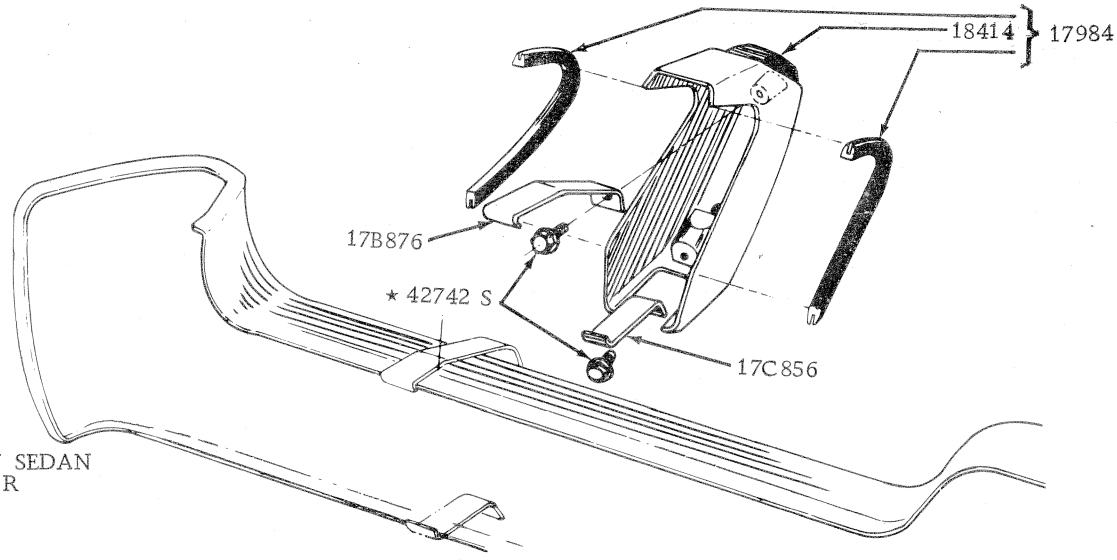

FALCON SEDAN
REAR

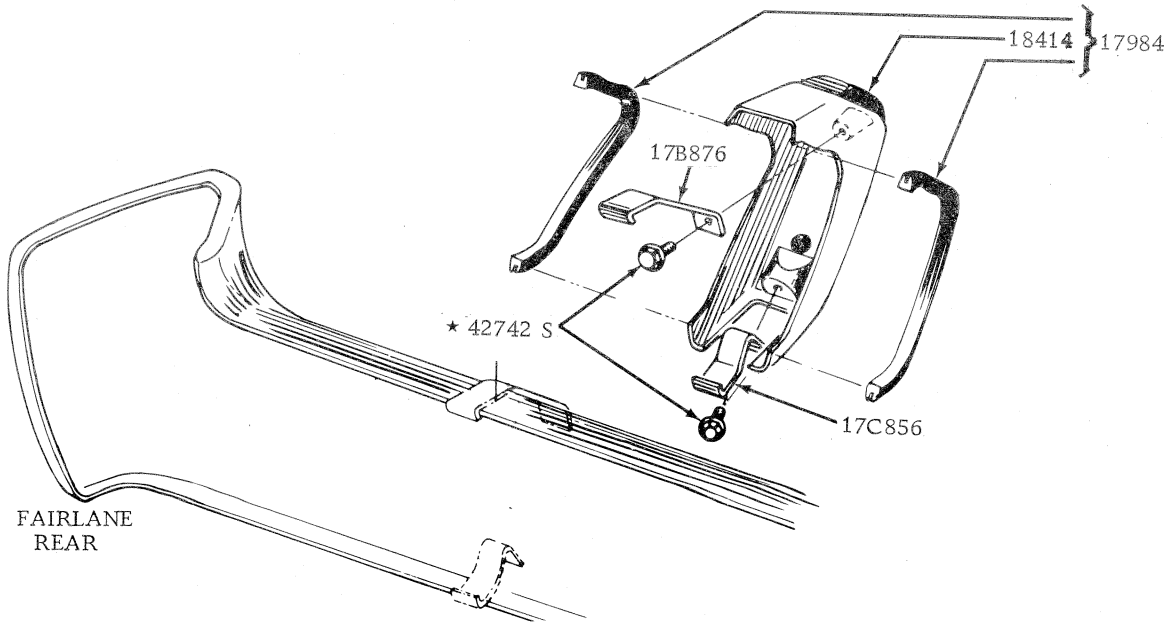

FAIRLANE
REAR

FRONT &REAR BUMPER OVERIDER

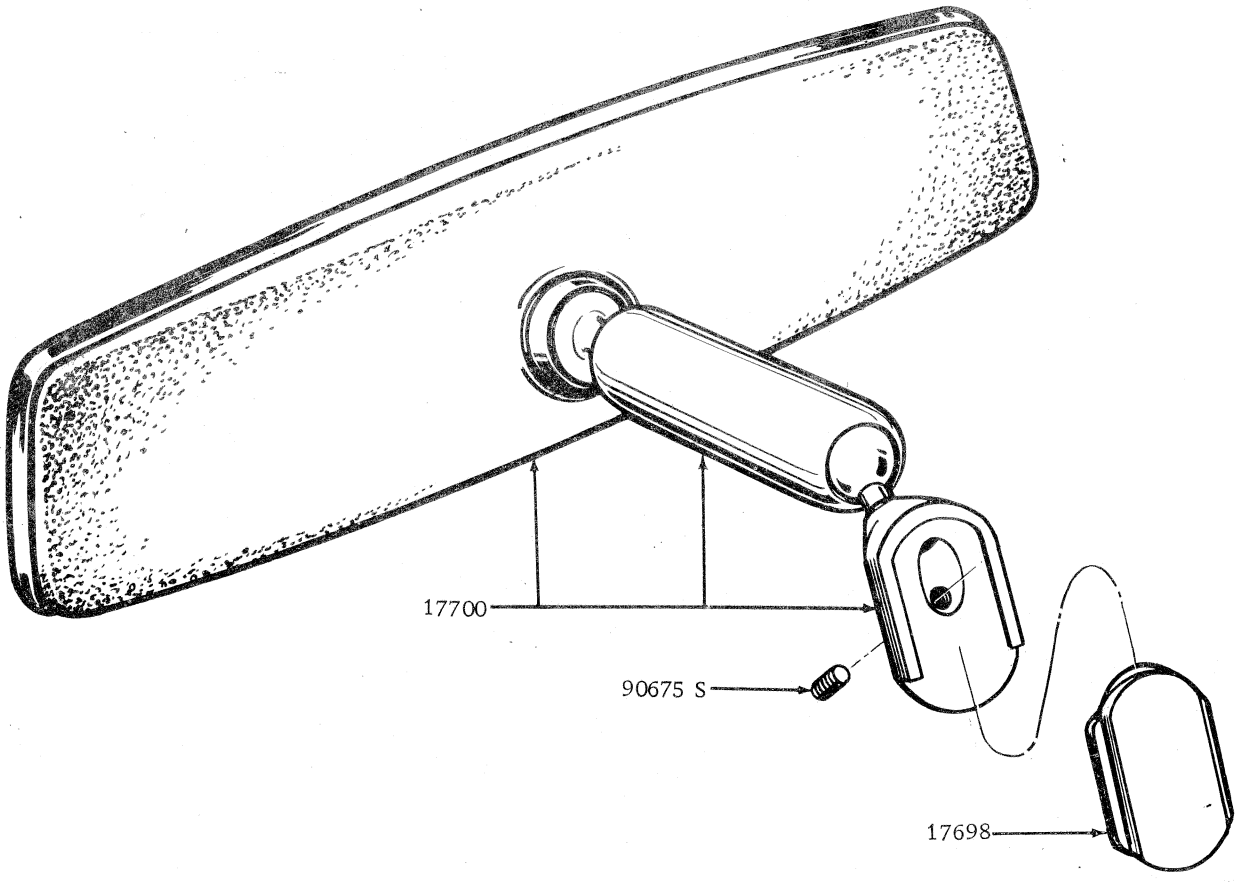

MIRROR-REAR VIEW INTERIOR

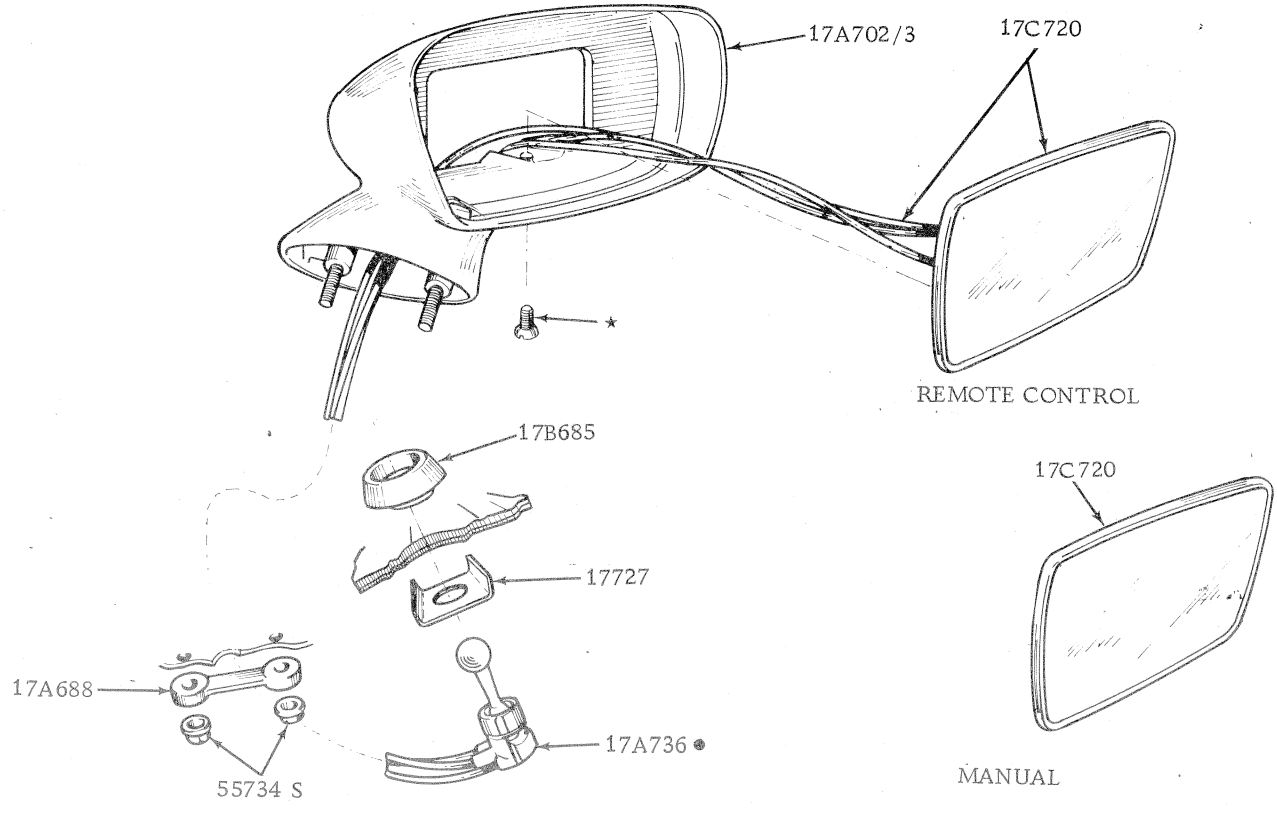

● SERVICED ONLY AS PART OF 17C720 ASSEMBLY

MIRROR REAR VIEW EXTERIOR

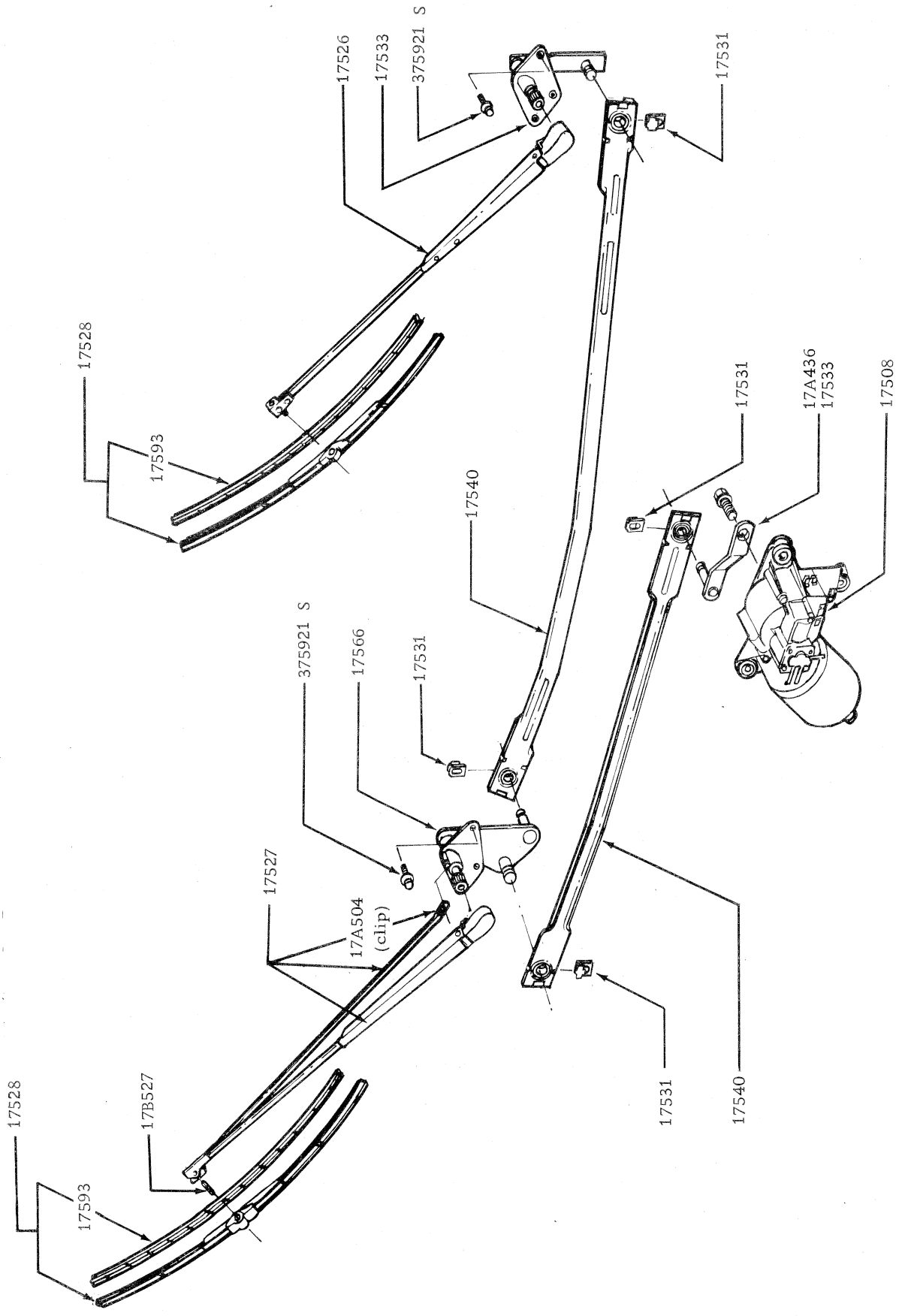

WINDSCREEN WIPER LINKAGE

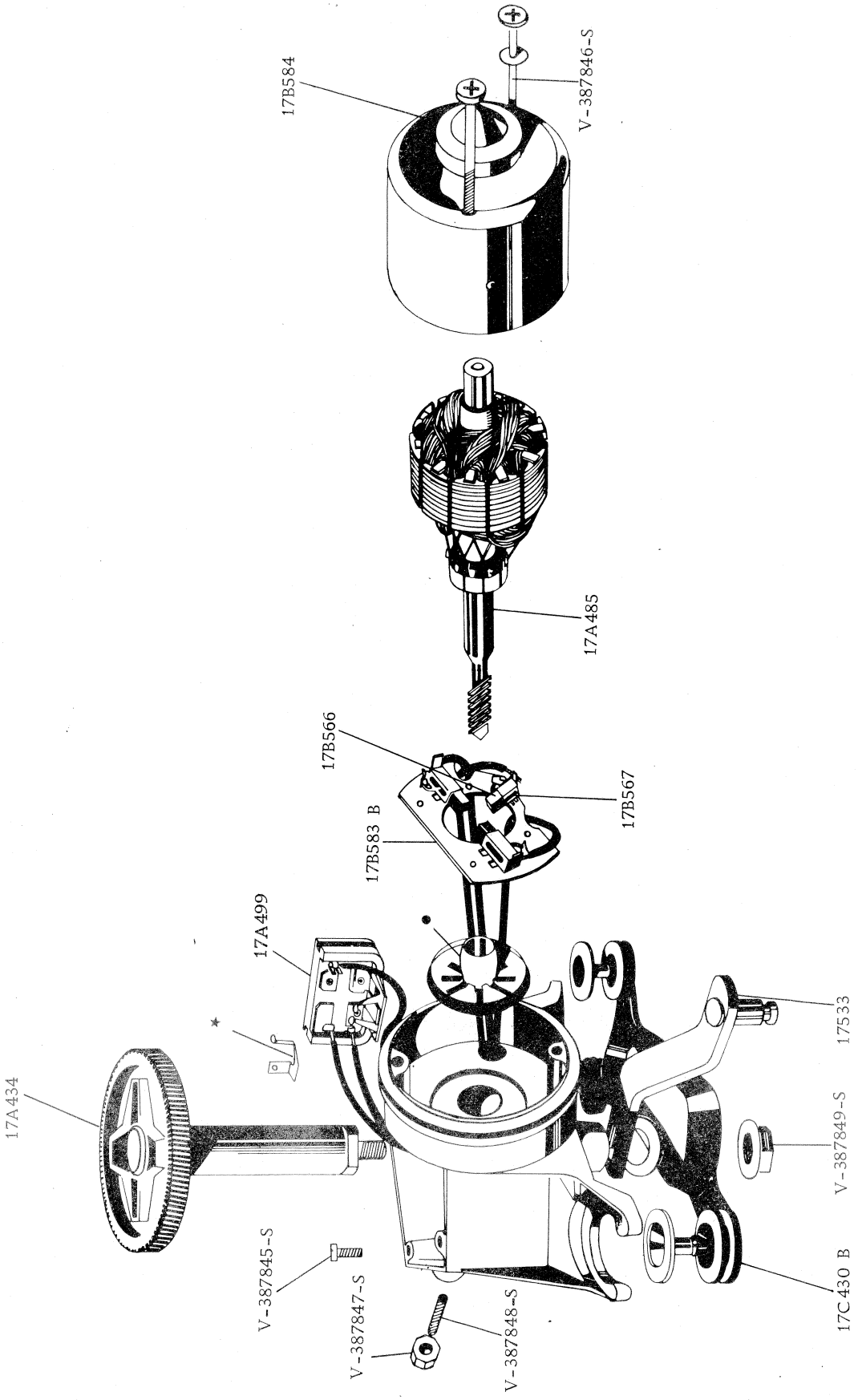

• SUPPLIED ONLY AS PART OF 17504 ASSEMBLY

WIPER MOTOR LUCAS TYPE

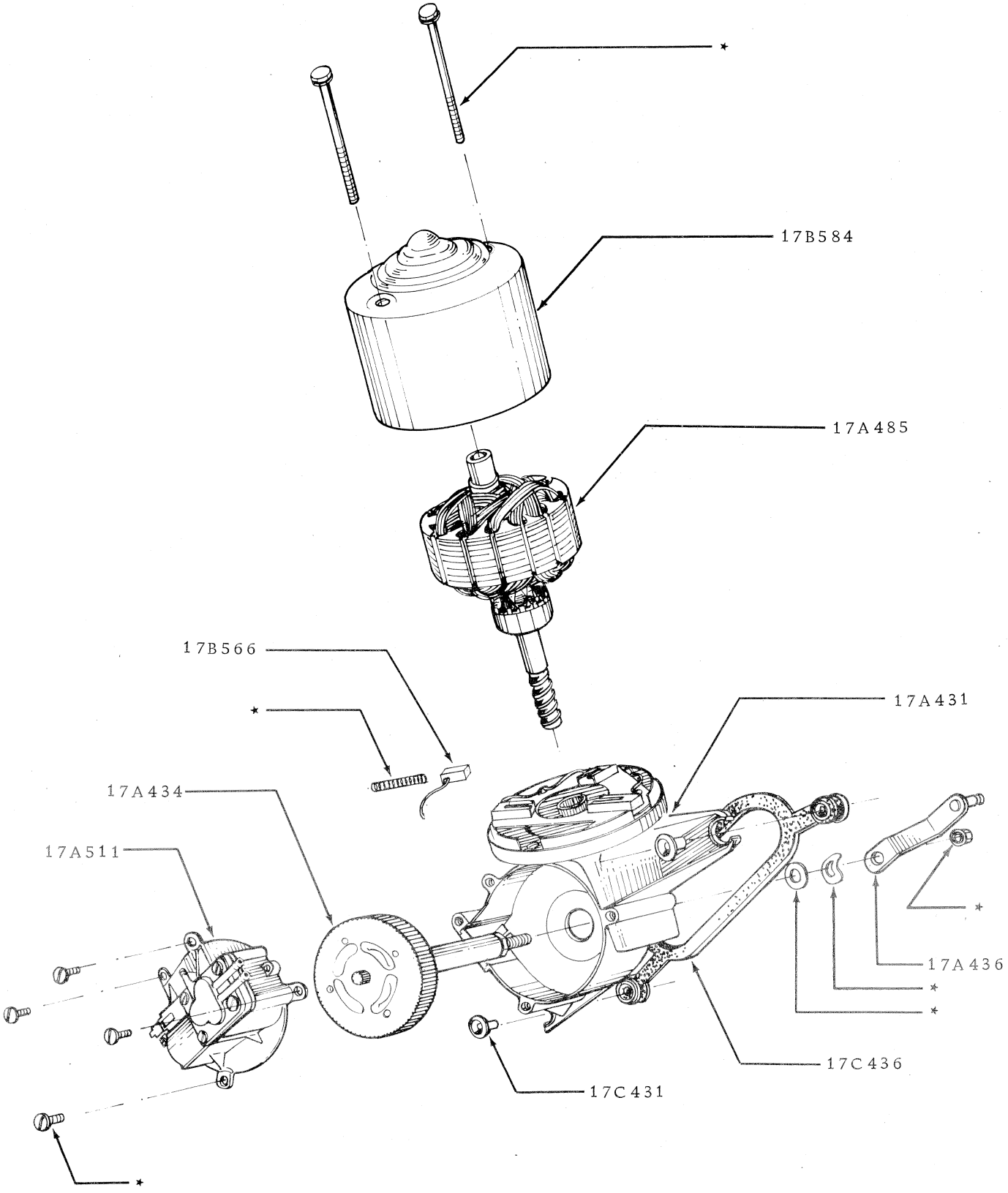

WIPER/WASHER MOTOR PRESTLITE TYPE

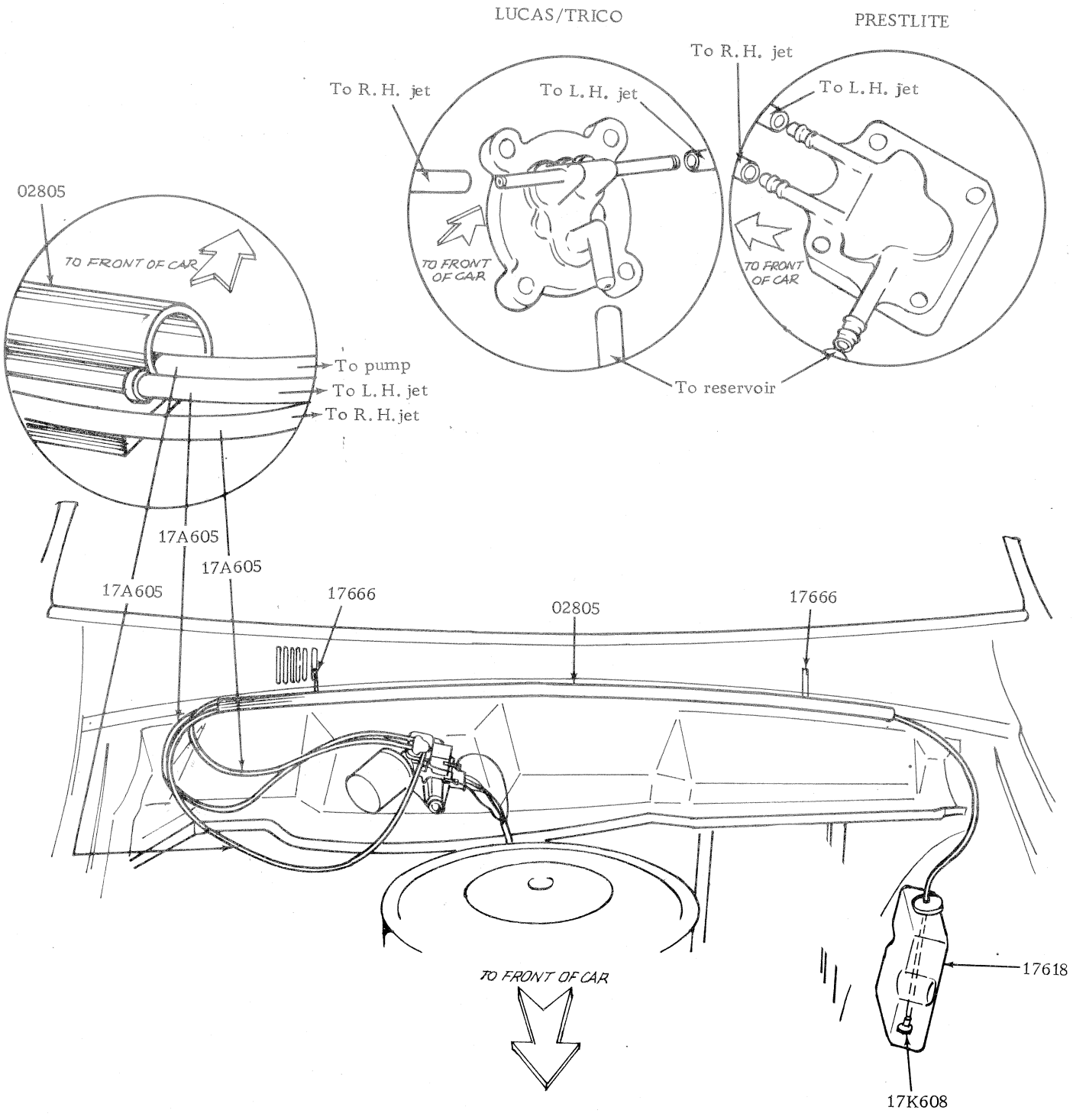

WINDSCREEN WASHER HOSES AND RELATED PARTS

MODEL	BODY TYPE	REMARKS	UNIT	PART NUMBER		
– – 18A018 – – INSULATOR – SHOCK ABSORBER LOWER						
XA/B, ZF/G	All		8	C4DA	18A018	A
– – 18041 – – WASHER – SHOCK ABSORBER INSULATOR OUTER						
XA/B, ZF/G	All		6	C1SS	18041	A
– – 18045 – – SHOCK ABSORBER ASSY. – FRONT – HEAVY DUTY (REFER ALSO 18124)						
XB, ZG	All		2	XB	18045	D0S0
– – 18080 – – SHOCK ABSORBER ASSY. – REAR – HEAVY DUTY (REFER ALSO 18125)						
XB	54, 65		2	XB	18080	C0S0
XB, ZG	54E,G, 66, 71, 78		2	XB	18080	B0S0
– – 18124 – – KIT – SHOCK ABSORBER – FRONT (REFER ALSO 18045)						
XA/B	54A,B,C,D, 65B,D	Black – exc. heavy duty or sports suspn.	2	XA	18124	A
ZF/G	All	Black – exc. heavy duty or hi ride	2	XA	18124	A
XA/B	66, 71, 78	Grey – exc. heavy duty	2	XA	18124	B
ZF/G	All	Grey – with hi ride	2	XA	18124	B
XA/B	54H, 65H	Light green	2	XA	18124	C
XA/B	54A,B,C,D, 65B,D	Light green – with sports suspn.	2	XA	18124	C
XA/B, ZF/G	All	Blue – heavy duty	2	XA	18124	D
XA/B, ZF/G	All	Washer – 5/16" flat – s/absorber to seat assy.	4	AR 351370 S8		
XA/B, ZF/G	All	Nut – 5/16" – 24 – s/absorber to seat assy.	4	55692 ES2		
XA/B, ZF/G	All	Nut & washer – ¾" – 24 – s/absorber to bracket – not serviced	2	34370 S8		
– – 18125 – – KIT – SHOCK ABSORBER REAR (REFER ALSO 18080)						
XA/B	54A,B,C,D, 65B,D	Black – exc. heavy duty or sports suspn.	2	XA	18125	A
XA/B	66, 71, 78	Grey – exc. heavy duty	2	XA	18125	B
ZF/G	All	Grey – with 'hi ride'	2	XA	18125	B
XA/B	54H, 65H	Light green	2	XA	18125	C
XA/B	54A,B,C,D, 65B,D	Light green – with heavy duty or sports suspn.	2	XA	18125	C
ZF/G	All	Navy blue – exc. heavy duty or hi ride	2	ZF	18125	A
ZF/G	All	Blue – heavy duty	2	ZF	18125	B
XA/B	66, 71, 78	Blue – heavy duty	2	ZF	18125	B
XA/B, ZF/G	All	Nut & washer – ¾" – 24 – s/absorber to plate & body – not serviced	4	34370 S8		
– – 18171 – – WASHER & SHOCK ABSORBER INSULATOR – INNER						
XA/B, ZF/G	All		6	ARC6DA	18171	A
– – 18183 – – BRACKET ASSY. – FRONT SHOCK ABSORBER UPPER						
XA/B, ZF/G	All		2	XT	18183	A
XA/B, ZF/G	All	Washer – 5/16" lock – bracket to body	6	34806 S36		
XA/B, ZF/G	All	Bolt – 5/16" – 24 x 1.00" – bracket to body	6	374130 S8		
– – 18198 – – INSULATOR – SHOCK ABSORBER						
XA/B, ZF/G	All		12	PB7M	18198	A
– – 18B258 – – BRACKET – HEATER CONTROL MOTOR MTG.						
XA/B, ZF/G	All	With air con.	1	XA	18B258	A
– – 18306 – – TEE – HOSE HEATER						
XA, ZF	All	250 c.i.d. 2V	1	XY	18306	A
XB, ZG	All	302 c.i.d. – from 9/74	1	XY	18306	A
– – 18C306 – – REGISTER – HEATER						
XA/B, ZF/G	All		1	XA	18C306	A
– – 18C311 – – SWITCH ASSY. – HEATER SERVO CONTROL						
XA/B, ZF/G	All		1	C60Z	18C311	A
– – 18A318 – – MOTOR ASSY. – AIR COND. & HEATER CONTROL – VACUUM						
XA/B, ZF/G	All	'Heater/air conditioner' door control	1	XA	18A318	A
XA/B, ZF/G	All	'Floor/defrost' door control	1	XA	18A318	B
XA/B, |F/G	All	'Fresh/recirculate' door control	1	C9ZZ	18A318	D

MODEL	BODY TYPE	REMARKS	UNIT	PART NUMBER		
— — 18C327 — — BUSHING — HEATER TEMP. REGULATOR CONTROL SHAFT						
XA/B, ZF/G	All		2	XA	18C327	A
— — 18330 — — REFER SECTION 60 — BASIC PART NUMBER 6211						
— — 18347 — — REFER SECTION 60 — BASIC PART NUMBER 6333						
— — 18A361 — — DOOR ASSY. — HEATER AIR DAMPER						
XA/B, ZF/G	All		1	XA	18A361	A
— — 18402 — — MIRROR ASSY. — INTERIOR REAR VIEW (REFER ALSO SECT. 190A)						
XB, ZG	All	Prismatic — day/night	1	XB	18402	A
— — 18402 — — MIRROR & MOUNTING ASSY. — EXTERIOR REAR VIEW (REFER SECT. 190A)						
— — 18414 — — INSERT — RUBBER BUMPER GUARD						
XA/B, ZF/G	All		a/r	XA	18414	A
— — 18471 — — PLENUM CHAMBER ASSY.						
XA/B, ZF/G	All	With A/C	1	XA	18471	B
— — 18472 — — HOSE — HOT WATER						
XA/B, ZF/G	All	Straight — 5/8" dia. x 10" long	1	XA	18472	C
XA/B, ZF/G	All	Straight — 5/8" dia. x 35" long	1	XA	18472	A
XA/B, ZF/G	All	Straight — 5/8" dia. x 38" long	1	XA	18472	B
XA/B, ZF/G	All	Straight — 5/8" dia. x 41" long	1	XA	18472	K
XA/B, ZF/G	All	Straight — 5/8" dia. x 46" long	1	XA	18472	E
XA/B, ZF/G	All	Moulded — 5/8" dia. x 6" x 3" right angle	1	XA	18472	D
XA/B, ZF/G	All	Moulded — 5/8" dia. x 15" x 2" right angle	1	XA	18472	J
XA/B, ZF/G	All	Moulded — 5/8" dia. x 16" x 4" right angle	1	XA	18472	H
XA/B, ZF/G	All	Moulded — 5/8" dia. x 17" x 2" right angle	1	XA	18472	DA
XA/B, ZF/G	All	Moulded — 5/8" dia. x 17" x 3" right angle	1	XA	18472	EA
XA/B, ZF/G	All	Moulded — 5/8" dia. x 24" x 3" right angle	1	XA	18472	G
XA/B, ZF/G	All	Moulded — 5/8" dia. x 32" x 3" right angle	1	XA	18472	BA
XA/B, ZF/G	All	Moulded — 5/8" dia. x 35" x 3" right angle	1	XA	18472	CA
XA/B, ZF/G	All	Moulded — 5/8" dia. x 39" x 1" right angle	1	XA	18472	L
XA/B, ZF/G	All	Bulk hose — 5/8" dia. x 20 feet long	a/r	AKH 6UP*		
XA/B, ZF/G	All	Clamp — heater hose	a/r	R7 22		
XA/B, ZF/G	All	Clip — hose to dash	1	V 388362 S36		
— — 18A475 — — COVER — HEATER MOTOR DASH PANEL OPENING						
XA/B, ZF/G	All		1	XA	18A475	A
— — 18B475 — — PAD — HEATER BLOWER MOTOR OPENING						
XA/B, ZF/G	All		1	XA	18B475	A
— — 18476 — — CORE ASSY. — HEATER						
XA/B, ZF/G	All	W/o AC	1	XA	18476	AC
XA/B, ZF/G	All	W/AC — inc's seal	1	XA	18B539	A
— — 18478 — — HEATER ASSY.						
XA/B, ZF/G	All		1	XA	18478	A
— — 18A485 — — PLATE ASSY. — HEATER HOUSING BLOWER & PLENUM						
XA/B, ZF/G	All		1	XA	18A485	A
XA/B, ZF/G	All	Export only	1	XA	18A485	B
XA/B, ZF/G	All	Screw — No. 10 x ½" — att. plate assy.	5	42127 S36		
— — 18A490 — — NOZZLE ASSY. — WINDSHIELD DEFROSTER						
XA/B, ZF/G	All	Without A/C	1	XA	18A490	A
XA/B, ZF/G	All	With A/C	1	XA	18A490	B
— — 18495 — — VALVE ASSY. — WATER CUT OFF						
XA/B, ZF/G	All	W/o AC	1	XA	18495	AA
— — 18495 — — VALVE & BRACKET ASSY. — HEATER WATER CONTROL						
XA/B, ZF/G	All	W/AC	1	YG 107		
— — 18B495 — — CABLE ASSY. — WATER VALVE						
XA/B, ZF/G	All		1	XA	18B495	A
— — 18504 — — FAN — HEATER BLOWER						
XA/B, ZF/G	All		1	XA	18504	A

MODEL	BODY TYPE	REMARKS	UNIT	PART NUMBER
– – 18518 – – CABLE ASSY. – HEATER TEMPERATURE CONTROL				
XA/B, ZF/G	All	W/o AC	1	XA 18518 A
XA/B, ZF/G	All	W/AC	1	XA 18518 B
– – 18519 – – KNOB – HEATER CONTROL				
XA/B, ZF/G	All	Temp.	1	XA 18567 A
XA/B, ZF/G	All	Air regulator	1	XA 18A567 A
XA/B, ZF/G	All	Clip – knob retaining	3	V 387653 S
– – 18527 – – MOTOR ASSY. – HEATER BLOWING				
XA/B, ZF/G	All		1	XA 18527 A
– – 18532 – – BRACKET – HEATER CONTROL MTG.				
XA/B, ZF/G	All	W/o AC	1	XA 18532 A
XA/B, ZF/G	All	W/AC – O.N.R.	1	XA 18532 B
– – 18B536 – – GASKET – HEATER CORE LOWER				
XA/B, ZF/G	All		1	XA 18B536 A
– – 18B539 – – CORE & SEAL – HEATER (REFER GROUP 18476)				
– – 18544 – – LEVER ASSY. – TEMPERATURE REG. CONTROL				
XA/B, ZF/G	All	W/o AC	1	XA 18544 A
XA/B, ZF/G	All	W/AC	1	XA 18544 B
– – 18A546 – – GASKET – SWITCH BEZEL				
XA/B, ZF/G	All	With heated rear window	1	XA 18A546 B
– – 18548 – – CABLE ASSY. – DEFROSTER CONTROL				
XA/B, ZF/G	All		1	XA 18548 A
– – 18549 – – CONTROL ASSY. – HEATER				
XA/B, ZF/G	All		1	XA 18549 A
XA/B, ZF/G	All	Clip – 3/16" dia. cable – control to heater	2	112784 ES2
XA/B, ZF/G	All	Screw – No. 8 – 18 x ¾" self tapping – control assy. to inst. panel	2	55928 S36
– – 18A549 – – WIRING – EARTH HEATER CONTROL				
XA/B, ZF/G	All		1	XA 18A549 A
XA/B, ZF/G	All	Clip – 3/16" dia. cable – control cable to heater & water valve	1	112784 ES2
– – 18C551 – – DOOR & SEAL ASSY. – HEATER TEMP. CONTROL VALVE				
XA/B, ZF/G	All		1	XA 18C551 A
– – 18559 – – BEZEL – SWITCH				
ZF/G	All	With heated rear window – O.R.B. ZG-10838-A	1	ZF 18559 A
– – 18C560 – – HARNESS ASSY. – HEATER HOSE & WIRING				
XA/B, ZF/G	All	With air con.	1	XA 18C560 A
– – 18567 – – KNOB – HEATER REGULATOR CONTROL (REFER GROUP 18519)				
– – 18A567 – – KNOB – AIR REGULATOR CONTROL (REFER GROUP 18519)				
– – 18574 – – LEVER ASSY. – AIR REGULATOR CONTROL				
XA/B, ZF/G	All	W/o AC	1	XA 18574 A
XA/B, ZF/G	All	W/AC	1	XA 18574 B
– – 18A574 – – CONTROL ASSY. – AIR				
XA/B, ZF/G	All	Export only	1	XA 18A574 A
– – 18578 – – SWITCH ASSY. – HEATER				
XA/B, ZF/G	All		1	XA 18578 A
– – 18578 – – SWITCH ASSY. – HEATED BACKLITE				
XA/B, ZF/G	All		1	PL 18578 B
– – 18583 – – GASKET – MOTOR MOUNTING HEATER BLOWER				
XA/B, ZF/G	All		1	XA 18583 AA
– – 18A584 – – HEATER HOUSING				
XA/B, ZF/G	All		1	XA 18A584 A

MODEL	BODY TYPE	REMARKS	UNIT	PART NUMBER		
– – 18591 – – RESISTOR – HEATER SWITCH TO BLOWER MOTOR						
XA/B, ZF/G	All		1	XA	18591	A
– – 18596 – – SEAL – HEATER HOSE TO DASH PANEL						
XA/B, ZF/G	All	W/AC	2	XA	18596	A
– – 18B596 – – SUPPORT – CORE HEATER						
XA/B, ZF/G	All	W/AC	1	XA	18B596	A
– – 18C597 – – BODY ASSY. – HEATER CONTROL						
XA/B, ZF/G	All		1	XA	18C597	A
– – 18599 – – NIPPLE – HOSE HEATER (ALSO REFER GROUP 8555)						
XA, ZF	All	6 cyl. – 5/8"	1	XA	18599	AA
– – 18618 – – GASKET – HEATER CORE UPPER						
XA/B, ZF/G	All		1	XA	18618	A
– – 18C619/20 – – WIRE ASSY. – HEATED BACKLITE						
XA/B, ZF/G	All	Feed	1	XA	18C619	A
XA/B, ZF/G	All	Earth	1	PL	18C620	B
– – 18A651 – – RETAINER AND FILTER – HEATER CONTROL LAMP						
XA/B, ZF/G	All	W/o AC	1	XA	18A651	A
XA/B, ZF/G	All	W/AC	1	XA	18A651	B
– – 18C652 – – BRACKET ASSY. – DAMPER DOOR CONTROL						
XA/B, ZF/G	All	W/AC	1	XA	18C652	A
– – 18658 – – SEAL – HEATER CORE TO CASE						
XA/B, ZF/G	All		1	XA	18658	B
– – 18666 – – HOSE						
XA/B, ZF/G	All	250 c.i.d. with air con. – vacuum source to check valve 53" long – when used 2V carb. cut to 47" long	1	XA	18666	AA
XA, ZF	All	250 c.i.d. 2V – with air con. – heater control vacuum supply inlet	1	XA	18666	AA
XA/B, ZF/G	All	8 cyl. – with air con. – vacuum source to vacuum tank	1	XA	18666	D
– – 18813 – – AERIAL – RADIO (REFER ACCESSORIES GROUP)						
– – 18817 – – KNOB ASSY. – RADIO CONTROL						
XA/B, ZF/G	All	Radio & radio stereo	2	XA	18817	A
– – 18830 – – DISC TONE CONTROL						
XA, ZF	All	Radio & radio stereo	2	XA	18830	A
XB, ZG	All	Radio & radio stereo	2	XA	18830	B
– – 18841 – – CONDENSER ASSY. – NOISE SUPPRESSION						
XB, ZG	All	With radio or radio/stereo	2	XA	18841	B*
– – 18912 – – GROMMET – ANTENNA LEAD						
XA/B, ZF/G	All		1	B5A	18912	A
– – 18954 – – CLAMP – INLET MANIFOLD HEATER HOSE						
XA/B, ZF/G	All		a/r	CH	18954	AA
– – 18972 – – SWITCH ASSY. – STEREO BALANCE CONTROL						
XA/B, ZF/G	All		1	XA	18972	A
– – 18A972 – – ESCUTCHEON – FADER CONTROL						
XA/B, ZF/G	All	With stereo	1	XA	18A972	A

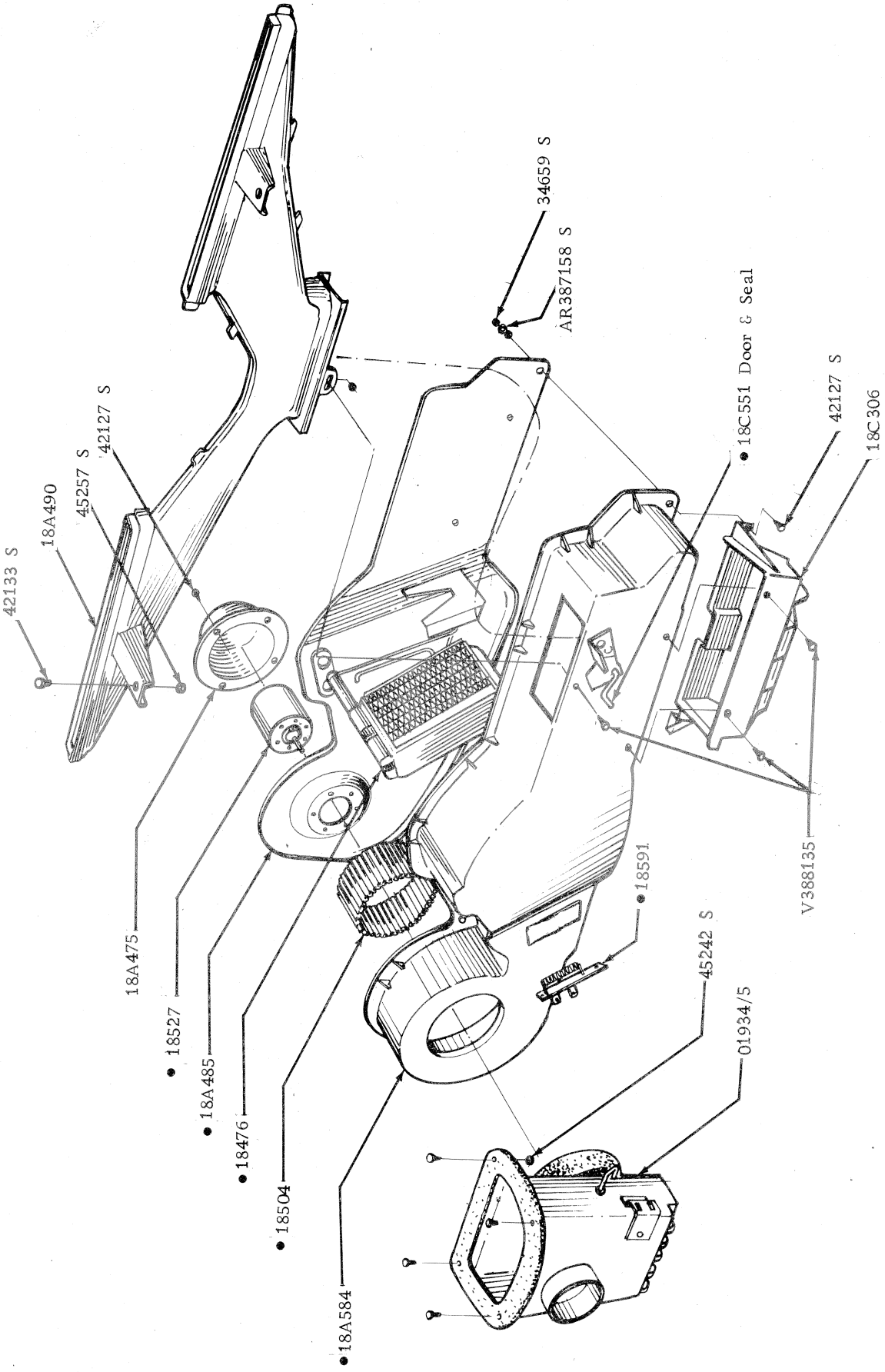

• PART OF 18478 HEATER ASSY.

HEATER DEMISTER ASSY.

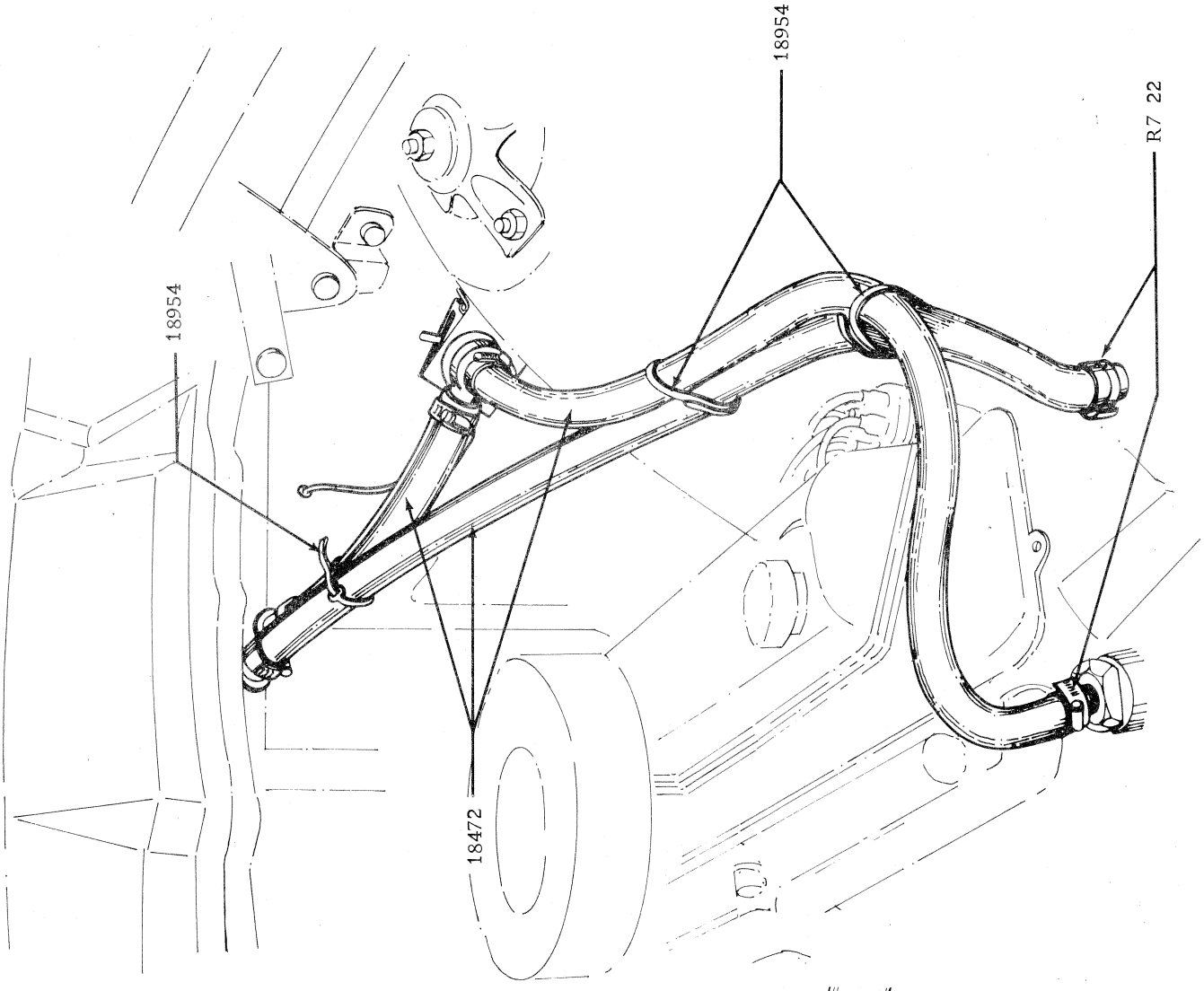

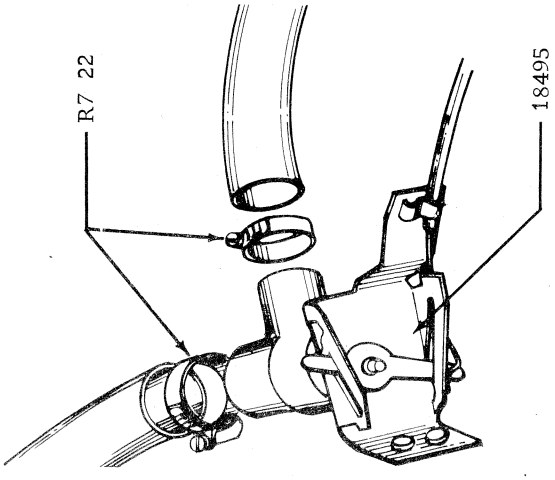

HEATER HOSES - 6 CYLINDER

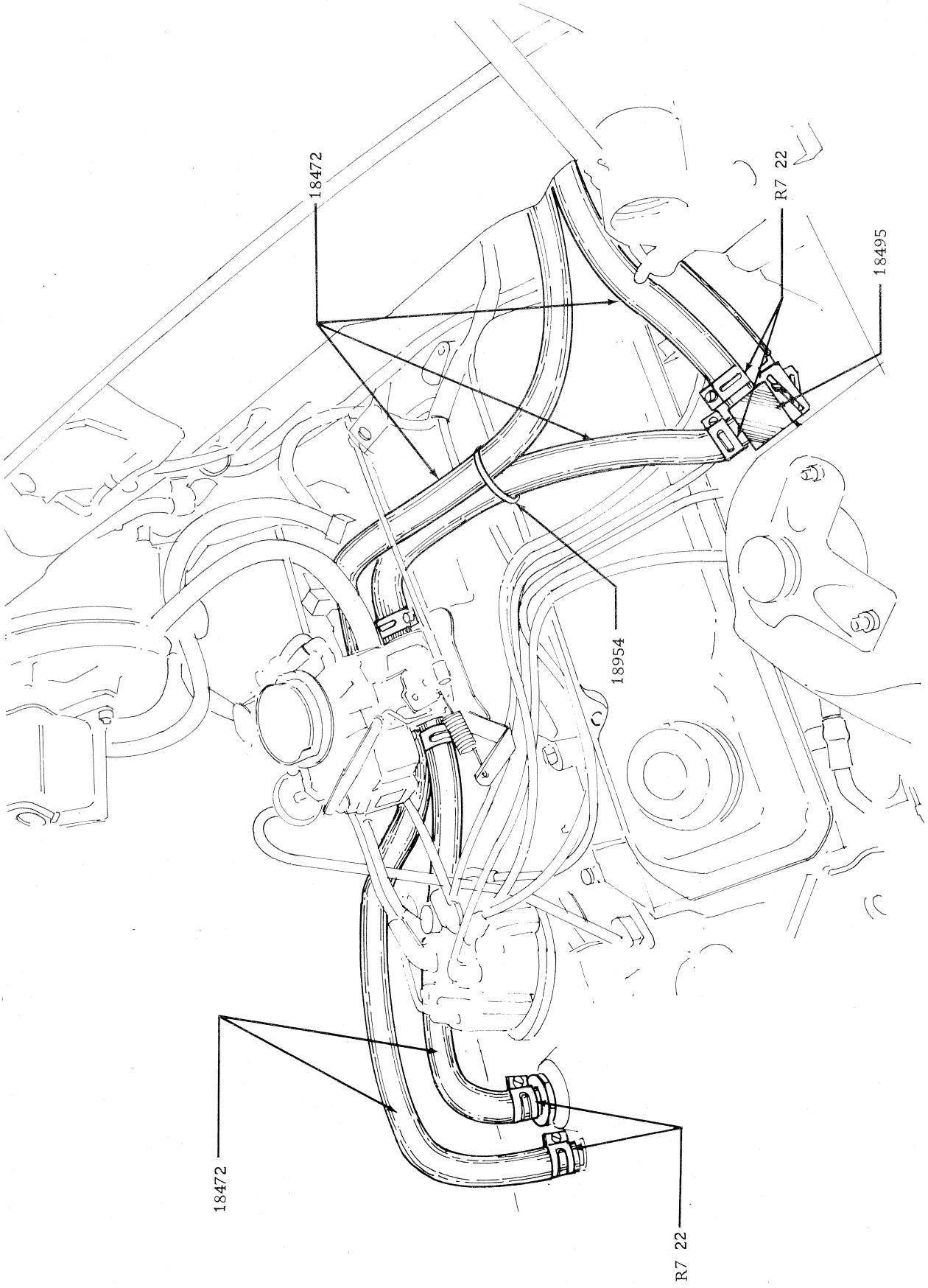

HEATER HOSES - 302 CID

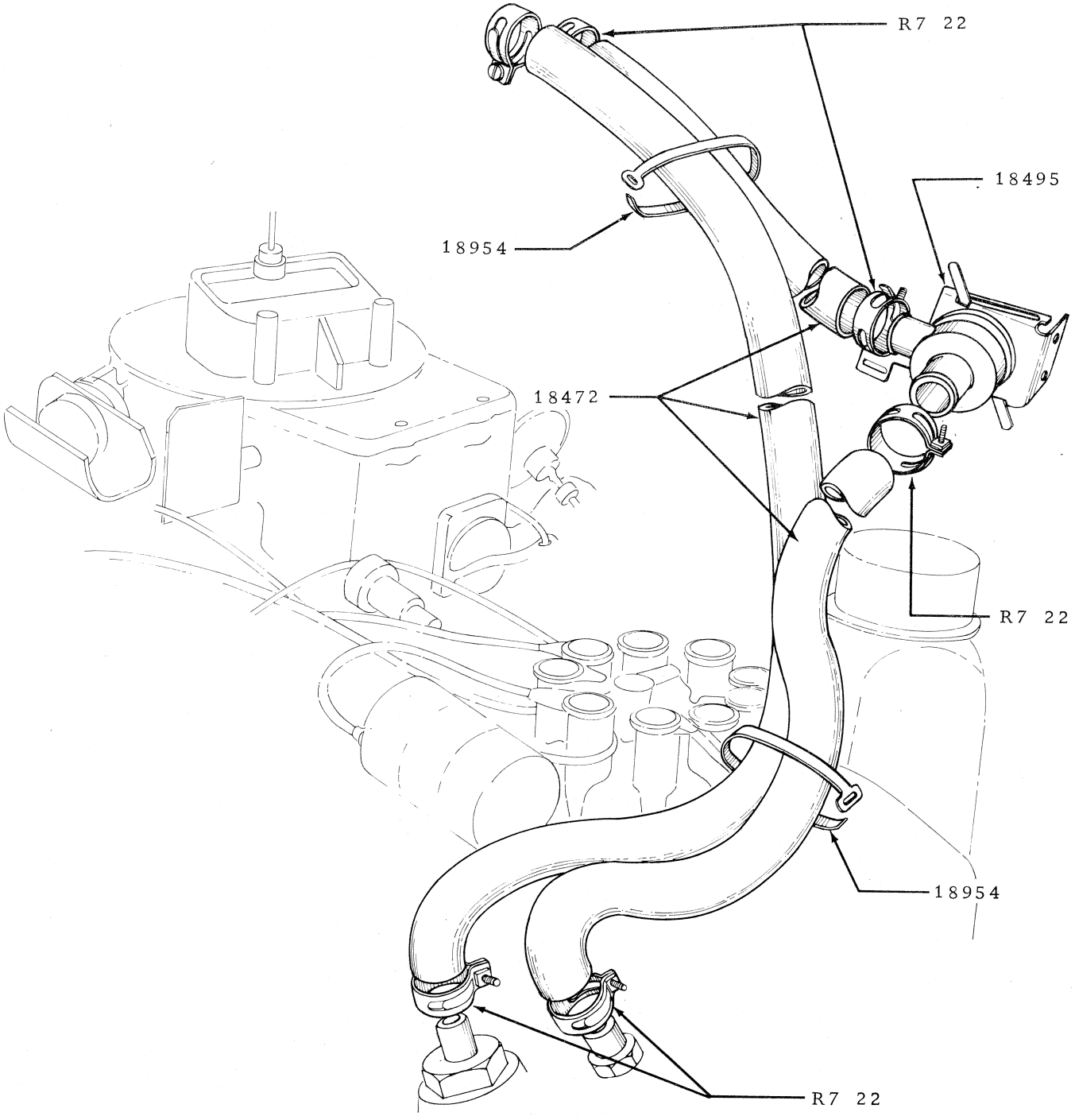

HEATER HOSES - 351 cid

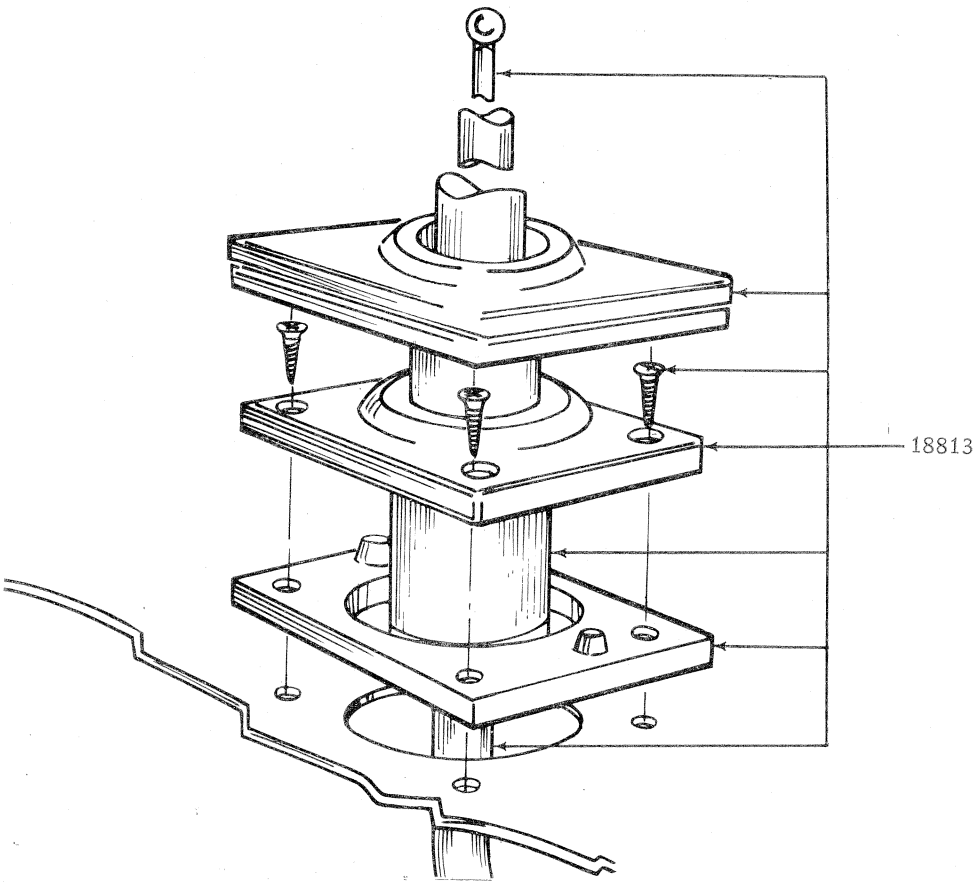

TYPICAL AERIAL

MODEL	BODY TYPE	REMARKS	UNIT	PART NUMBER	
– – 19469 – – DOOR ASSY. – EVAPORATOR CASE DAMPER					
XA/B, ZF/G	All		1	XA	19469 A
– – 19B469 – – SHAFT – DAMPER TEMPERATURE CONTROL					
XA/B, ZF/G	All	W A/C	1	XA	19B469 A
– – 19K501 – – VENTILATOR ASSY. – COLD AIR					
XA/B, ZF/G	All	Export only	1	XA	19K501 A
– – 19B552 – – SEAL – EVAPORATOR CORE TUBES TO CASE					
XA/B, ZF/G	All		1	XA	19B552 A
– – 19A566 – – VACUUM TANK & BRACKET ASSY.					
XA/B. ZF/G	All	W A/C	1	D00Z	19A566 A
– – 19A586 – – PLATE ASSY. – EVAPORATOR FRONT HOUSING COVER					
XA/B, ZF/G	All		1	XA	19A586 A
– – 19B596 – – KIT – AIR CONDITIONER 'O' RING SEAL					
XA/B, ZF/G	All	P/o YC 5 (19703)	1	YF 240	
– – 19A615 – – CONDENSER & TUBE ASSY.					
XA/B, ZF/G	All		1	XA	19A615 A
– – 19618 – – THERMOSTAT ASSY. – AIR CONDITIONER					
XA/B, ZF/G	All		1	YH 5	
– – 19A626 – – CASE – EVAPORATOR					
XA/B, ZF/G	All		1	XA	19A626 A
– – 19A642 – – SWITCH ASSY. – BLOWER					
XA/B, ZF/G	All	W A/C	1	XA	19A642 A
– – 19655 – – KIT – COMPRESSOR CRANKSHAFT SEAL					
XA,ZF	All	To 2/72 – ident. C9AA 2875 A1/2	1	YE 3	
XA/B, ZF/G	All	From 2/72 – ident. R210L	1	YE 5	
– – 19656 – – VALVE PLATE ASSY. – COMPRESSOR					
XA/B, ZF/G	All	P/o YC 5 (19703)	1	YE 7	
– – 19A657 – – WIRING ASSY. – SWITCH TO THERMOSTAT					
XA/B, ZF/G	All	W A/C	1	XA	19A657 A
XA/B, ZF/G	All	W A/C – fuse – 30 amp	1	A 105 13	
– – 19B657 – – WIRING ASSY. – AIR COND. EVAPORATOR					
XA/B, ZF/G	All	To 3/74	1	XA	19B657 A
XB,ZG	All	From 3/74	1	XA	19B657 B*
– – 19A672 – – SEAL – EVAPORATOR CORE					
XA/B, ZF/G	All		1	XA	19A672 A
– – 19B680/1 – – DUCT – VENTILATION AND AIR CONDITIONER					
XA/B	All	R.H. – W/o A/C	1	XA	19K680 A
XA/B	All	R.H. – W A/C – to 11/74	1	XA	19B680 A
XB	All	R.H. – W A/C – from 11/74	1	XB	19B680 A*
ZF/G	All	R.H. – W/o A/C	1	ZF	19K680 A
ZF/G	All	R.H. – W A/C to 11/74	1	ZF	19B680 A
ZG	All	R.H. – W A/C – from 11/74	1	ZG	19B680 A*
XA/B, ZF/G	All	L.H. – W/o A/C	1	XA	19K681 A
XA/B, ZF/G	All	L.H. – W A/C – to 11/74	1	XA	19B681 A
XB,ZG	All	L.H. – W A/C – from 11/74	1	XB	19B681 A*
– – 19K680/1 – – DUCT – VENTILATION (REFER GROUP 19B680/1)					
– – 19B684 – – KIT – COMPRESSOR GASKET					
XA/B, ZF/G	All	P/o YC 5 (19703)	1	YE 1	

MODEL	BODY TYPE	REMARKS	UNIT	PART NUMBER	
– – 19703 – – COMPRESSOR ASSY. – AIR CONDITIONER					
XA/B, ZF/G	All		1	YC 5	
XA/B, ZF/G	All	Screw – att. compressor to bracket	a/r	381649 S2	
XA/B, ZF/G	All	250 c.i.d. – bolt 3/8" – 16 x 1.00" – compressor to brkt.	4	20388 S8	
XA/B, ZF/G	All	250 c.i.d. – lockwasher – 3/8" – compressor to brkt. – O.N.R.	4	34827 S	
– – 19A706 – – RESISTOR – BLOWER MOTOR					
XA/B, ZF/G	All		1	D00Z	19A706 A
– – 19C732 – – CONNECTOR – RESISTOR					
XA/B	All	W A/C – exc. taxi – to 11/74	1	XA	19C732 A
ZF/G	All	W A/C – exc. taxi – to 11/74	1	ZF	19C732 A
XB,ZG	All	W A/C – exc. taxi – from 11/74	1	XB	19C732 A*
XA/B, ZF/G	All	W A/C – taxi – to 11/74	1	XA	19C732 B
XB,ZG	All	W A/C – taxi – from 11/74	1	XB	19C732 B*
– – 19B738 – – SEAL – EVAPORATOR CASE COVER					
XA/B, ZF/G	All		1	XA	19B738 A
– – 19B749 – – DOOR ASSY. – EVAPORATOR CASE OUTLET					
XA/B, ZF/G	All		1	XA	19B749 A
– – 19752 – – VALVE ASSY. – COMPRESSOR LOW PRESSURE					
XA/B, ZF/G	All	P/o 19837 hose – to 12/74	1	XA	19752 A
XB,ZG	All	P/o 19837 hose – from 12/74	1	XB	19752 A*
– – 19758 – – BRACKET – CUT OUT SWITCH MOUNTING					
XA/B, ZF/G	All	A/C less heater – export only	1	XA	19758 A
– – 19C767 – – BRACKET ASSY. – EVAPORATOR CASE DAMPER DOOR CABLE					
XA/B, ZF/G	All		1	XA	19C767 A
– – 19C771 – – BUSHING – CAM DAMPER DOOR					
XA/B, ZF/G	All	W A/C – 0.295" dia.	1	XA	19C771 A
XA/B, ZF/G	All	W A/C – 0.374" dia.	1	XA	19C771 B
– – 19C772 – – CAM – DAMPER DOOR					
XA/B, ZF/G	All	W A/C	1	XA	19C772 A
– – 19784 – – SUPPORT – EVAPORATOR CORE					
XA/B, ZF/G	All		1	XA	19784 A
– – 19805 – – MOTOR & WHEEL ASSY. – BLOWER					
XA/B, ZF/G	All	W A/C – to 8/74	1	XA	19805 A
XB,ZG	All	W A/C – from 8/74	1	XB	19805 A*
– – 19C819 – – GROMMET					
XA/B, ZF/G	All	W A/C – compressor to condenser hose – thru radiator support – O.N.R.	2	XA	19C819 A
XA/B, ZF/G	All	W A/C & sliding sun roof	1	XW	19C819 B
– – 19A821 – – PLATE – BLOWER INLET					
XA/B, ZF/G	All	W A/C	1	XA	19A821 A
– – 19837 – – HOSE ASSY . – EVAPORATOR TO COMPRESSOR					
XA/B, ZF/G	All	6 cyl.	1	XA	19837 C
XA/B, ZF/G	All	8 cyl.	1	XA	19837 B
– – 19849 – – VALVE ASSY. – EVAPORATOR EXPANSION					
XA/B, ZF/G	All		1	C80Z	19849 A
– – 19850 – – EVAPORATOR ASSY.					
XA/B, ZF/G	All	With heater	1	XA	19850 A
XA/B, ZF/G	All	Without heater – export only	1	XA	19850 B
– – 19860 – – CORE ASSY. – EVAPORATOR					
XA/B, ZF/G	All	To 8/74	1	XA	19860 A
XB,ZG	All	From 8/74	1	XB	19860 A*

MODEL	BODY TYPE	REMARKS	UNIT	PART NUMBER	
– – 19A885 – – WIRING ASSY. – WATER VALVE SWITCH TO CLUTCH					
XA/B, ZF/G	All	6 cyl.	1	XA	19A885 C
XA/B, ZF/G	All	8 cyl.	1	XA	19A885 B
– – 19B888 – – VALVE ASSY. – VACUUM SELECTOR					
XA/B, ZF/G	All	W A/C	1	YH 24	
– – 19893 – – LOUVRE ASSY. – VENT AIR OUTLET					
XA/B, ZF/G	All	R.H. – outer – to 11/74	1	XA	19893 B
XB,ZG	All	R.H. – outer – from 11/74	1	XB	19893 B*
XA/B, ZF/G	All	L.H. – outer – to 11/74	1	XA	19893 A
XB,ZG	All	L.H. – outer – from 11/74	1	XB	19893 A*
XA/B, ZF/G	All	R.H. – inner – W A/C – to 11/74	1	XA	19893 A
XB,ZG	All	R.H. – inner – W A/C – from 11/74	1	XB	19893 A*
XA/B, ZF/G	All	L.H. – inner – W A/C	1	XA	19893 C
– – 19930 – – CONTROL ASSY. – HEATER AIR CONDITIONER					
XA/B, ZF/G	All	With heater	1	XA	19930 A
XA/B, ZF/G	All	Without heater – export only	1	XA	19930 B
XA/B, ZF/G	All	T-piece – vacuum hoses – to 5/74	3	383006 S	
XB,ZG	All	T-piece – vacuum hoses – from 5/74	3	V 388540*	
XA/B, ZF/G	All	T-piece – ¼" – plastic	1	383009 S	
– – 19C932 – – DUCT & CONNECTOR ASSY.					
XA/B, ZF/G	All	W A/C – exc. taxi	1	XA	19C932 A
XA/B, ZF/G	All	W A/C – taxi	1	XA	19C932 B
– – 19939 – – HOSE ASSY. – DEHYDRATOR TO EVAPORATOR					
XA/B, ZF/G	All		1	XA	19939 A
– – 19C939 – – HOSE ASSY. – CONDENSER TO DEHYDRATOR					
XA/B, ZF/G	All		1	XA	19C939 A
– – 19A945 – – SWITCH ASSY. – COMPRESSOR CLUTCH CONTROL					
XA/B, ZF/G	All		1	YH 54	
– – 19959 – – DEHYDRATOR ASSY.					
XA/B, ZF/G	All		1	XA	19959 A
– – 19972 – – HOSE ASSY. – AIR CONDITIONER COMPRESSOR TO CONDENSER					
XA/B, ZF/G	All	6 cyl.	1	XA	19972 C
XA/B, ZF/G	All	8 cyl.	1	XA	19972 B
– – 19A990 – – VALVE ASSY. – COMPRESSOR HIGH PRESSURE – AIR COND.					
XA/B, ZF/G	All	P/o 19972 hose – to 12/74	1	XA	19A990 A
XB,ZG	All	P/o 19972 hose – from 12/74	1	XB	19A990 A*

MODEL	BODY TYPE	REMARKS	UNIT	PART NUMBER

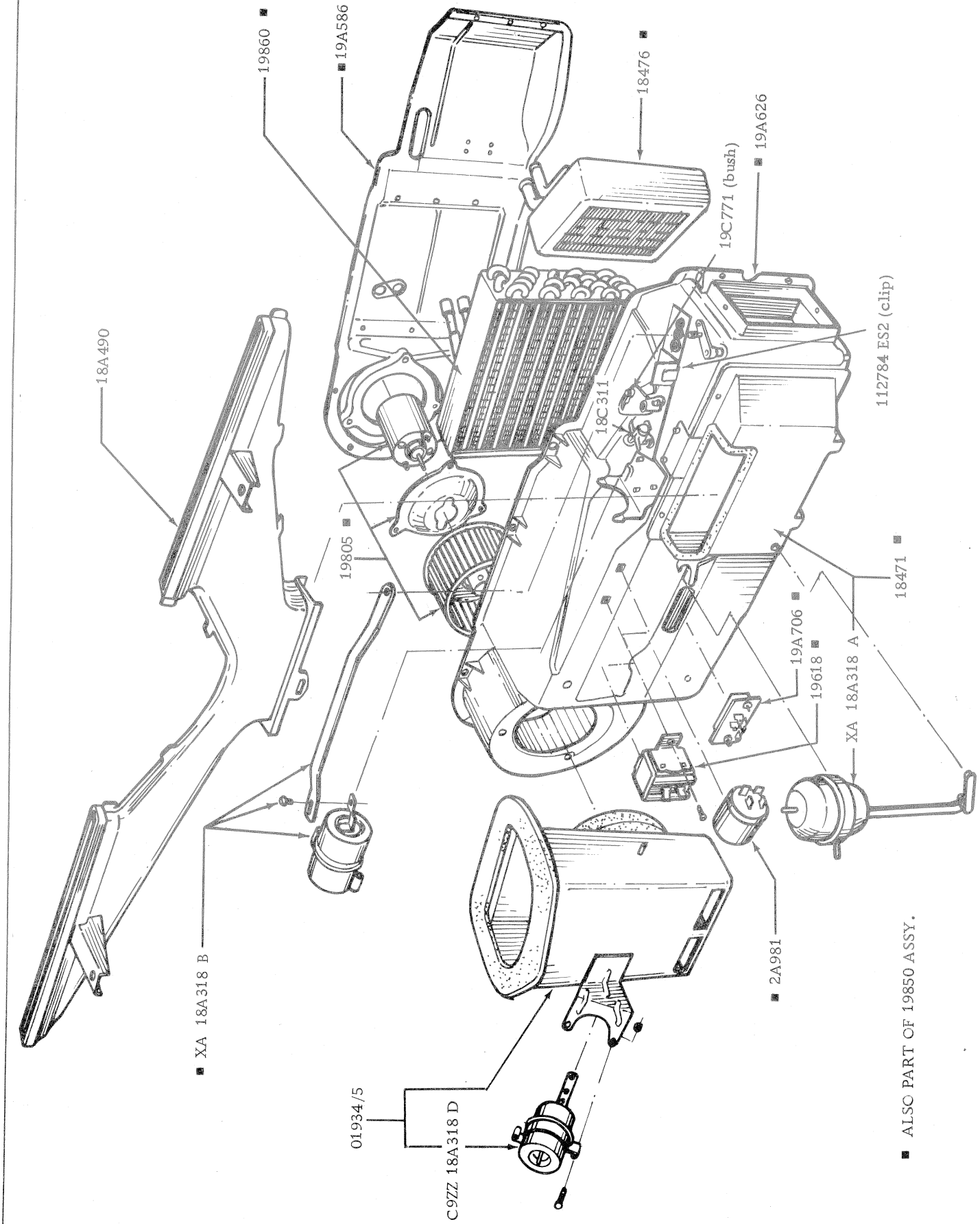

AIRCONDITIONER & RELATED PARTS

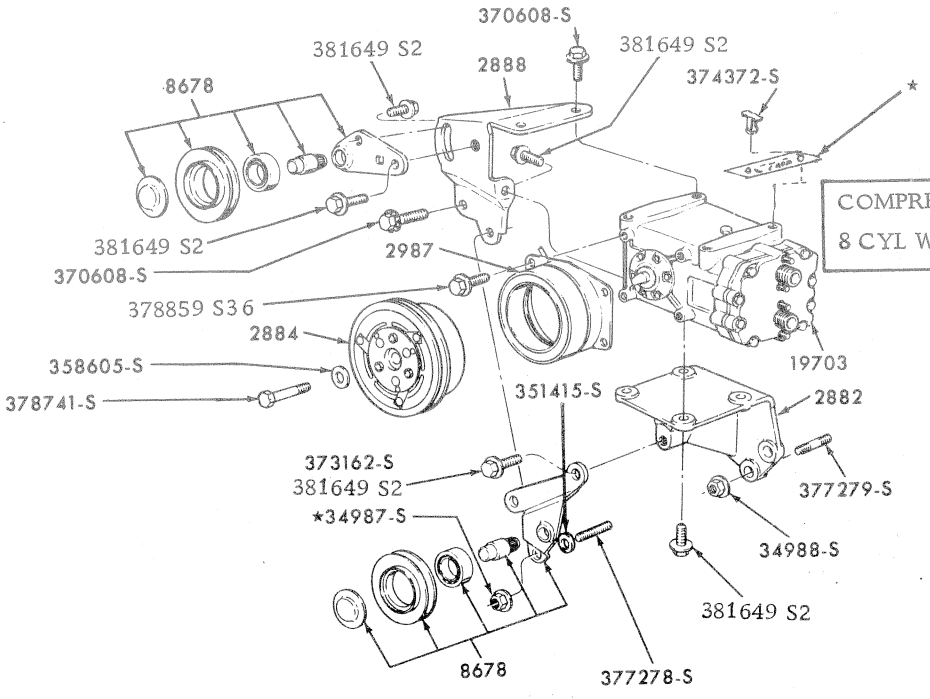

COMPRESSOR BRACKET AND IDLER PULLEYS
8 CYL WITH OR WITHOUT POWER STEERING

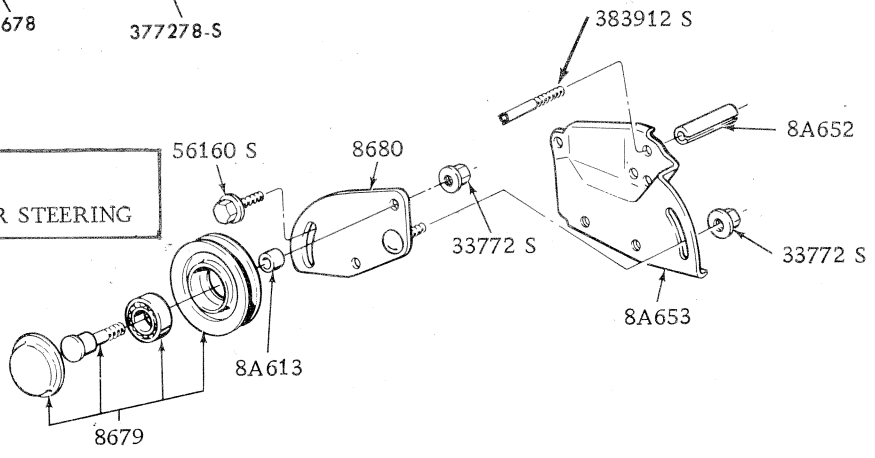

IDLER PULLEY INSTALLATION – 8 CYL
WITH AIR CONDITIONING – WITHOUT POWER STEERING

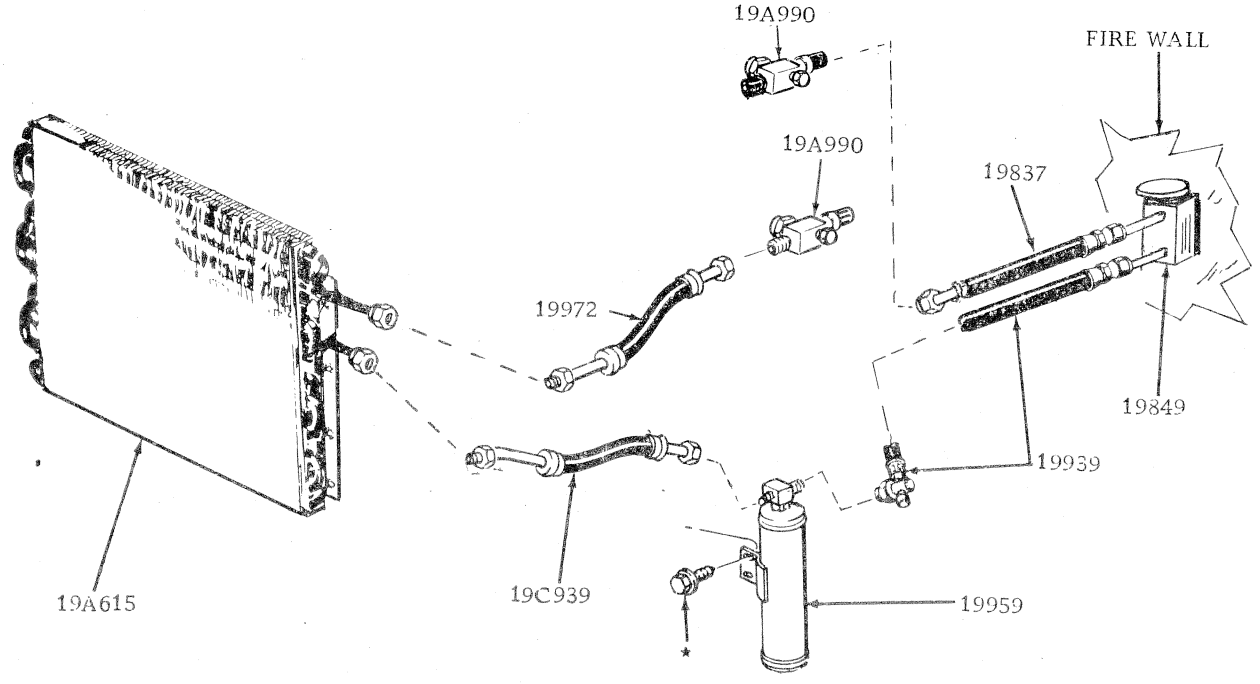

AIR CONDITIONING HOSES, COMPRESSOR AND RELATED PARTS

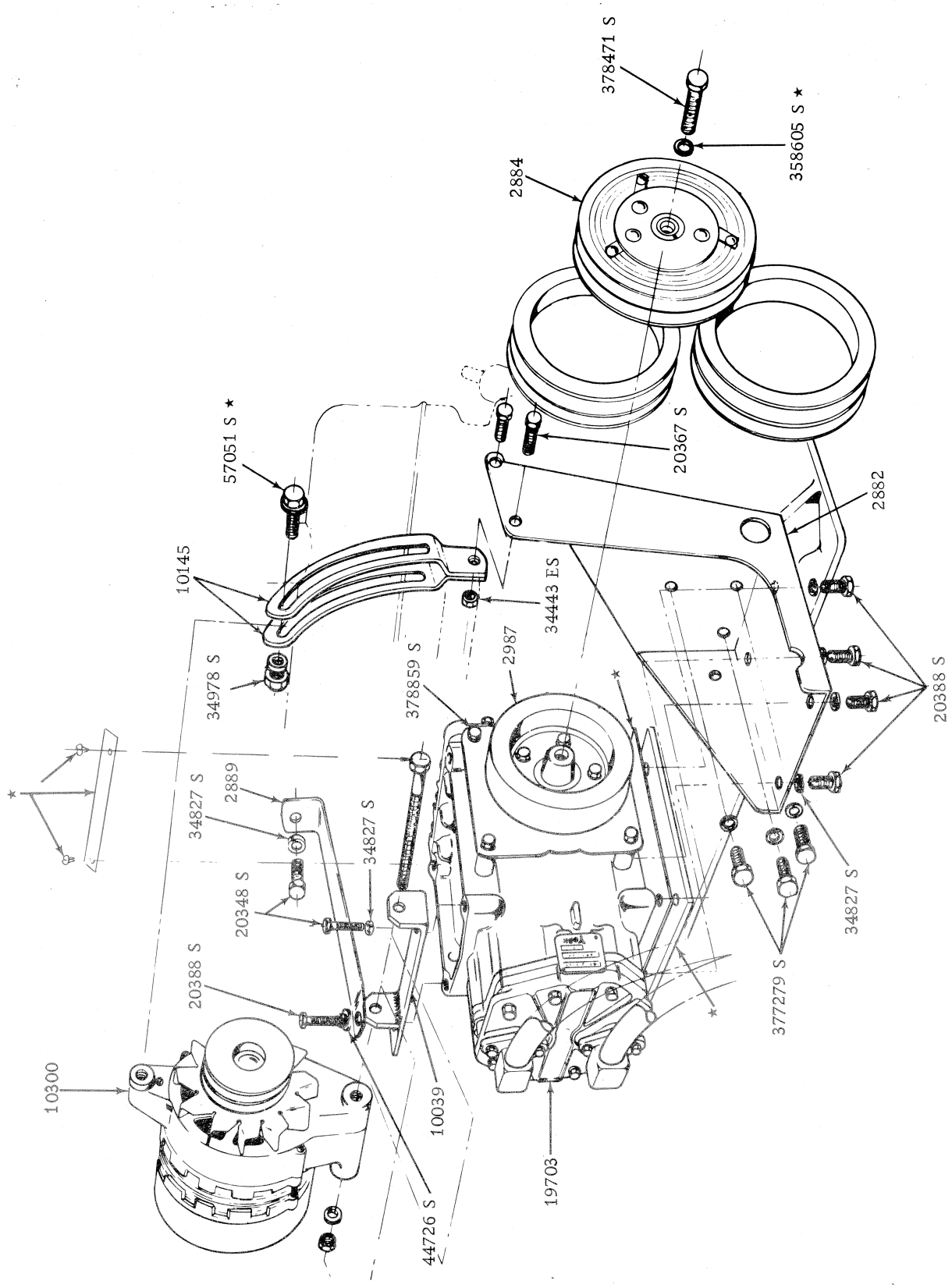

6 CYL ENGINE WITH AIR CONDITIONING

COMPRESSOR ALTERNATOR AND RELATED PARTS

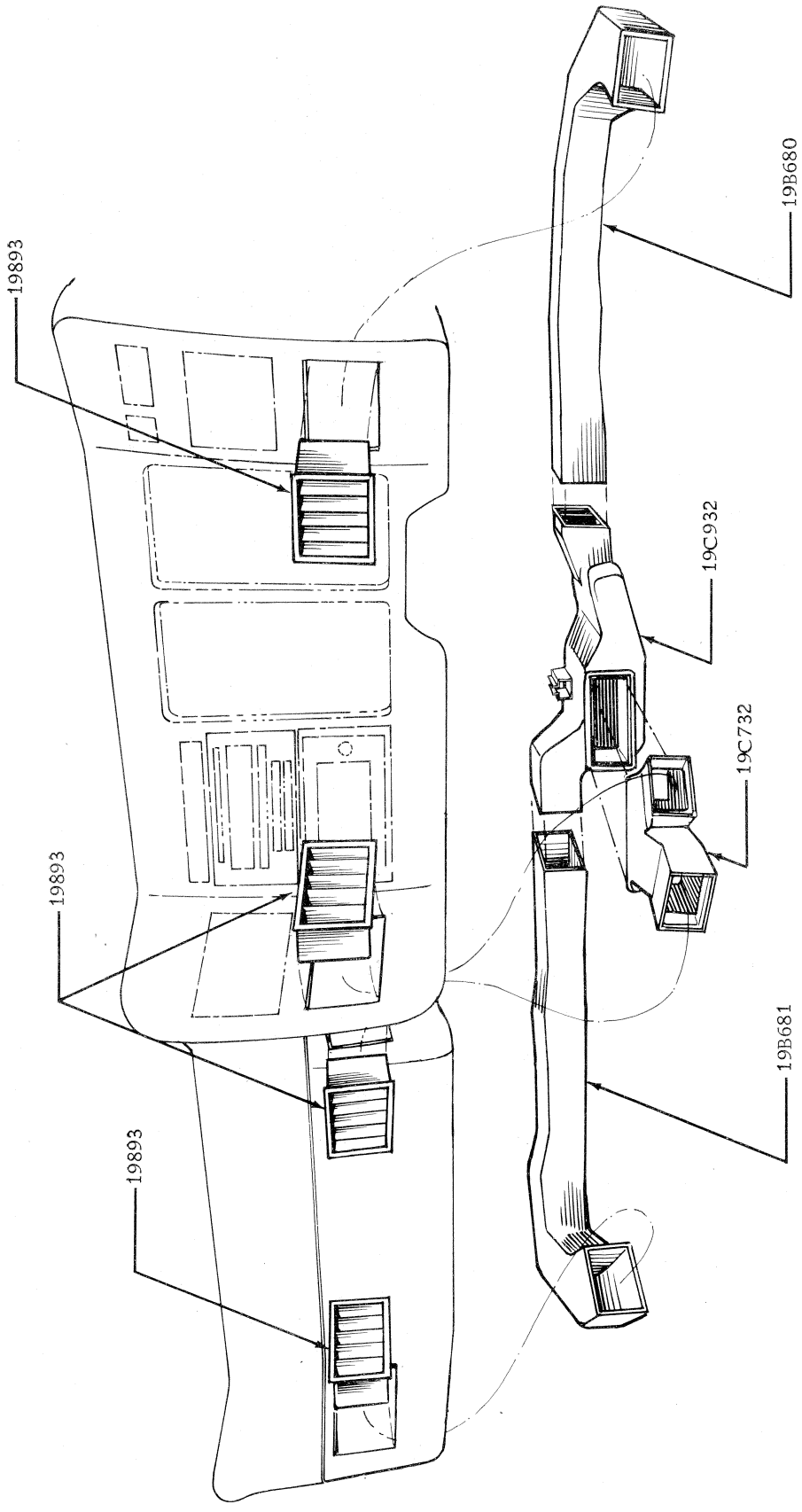

VENTILATION INSTRUMENT PANEL

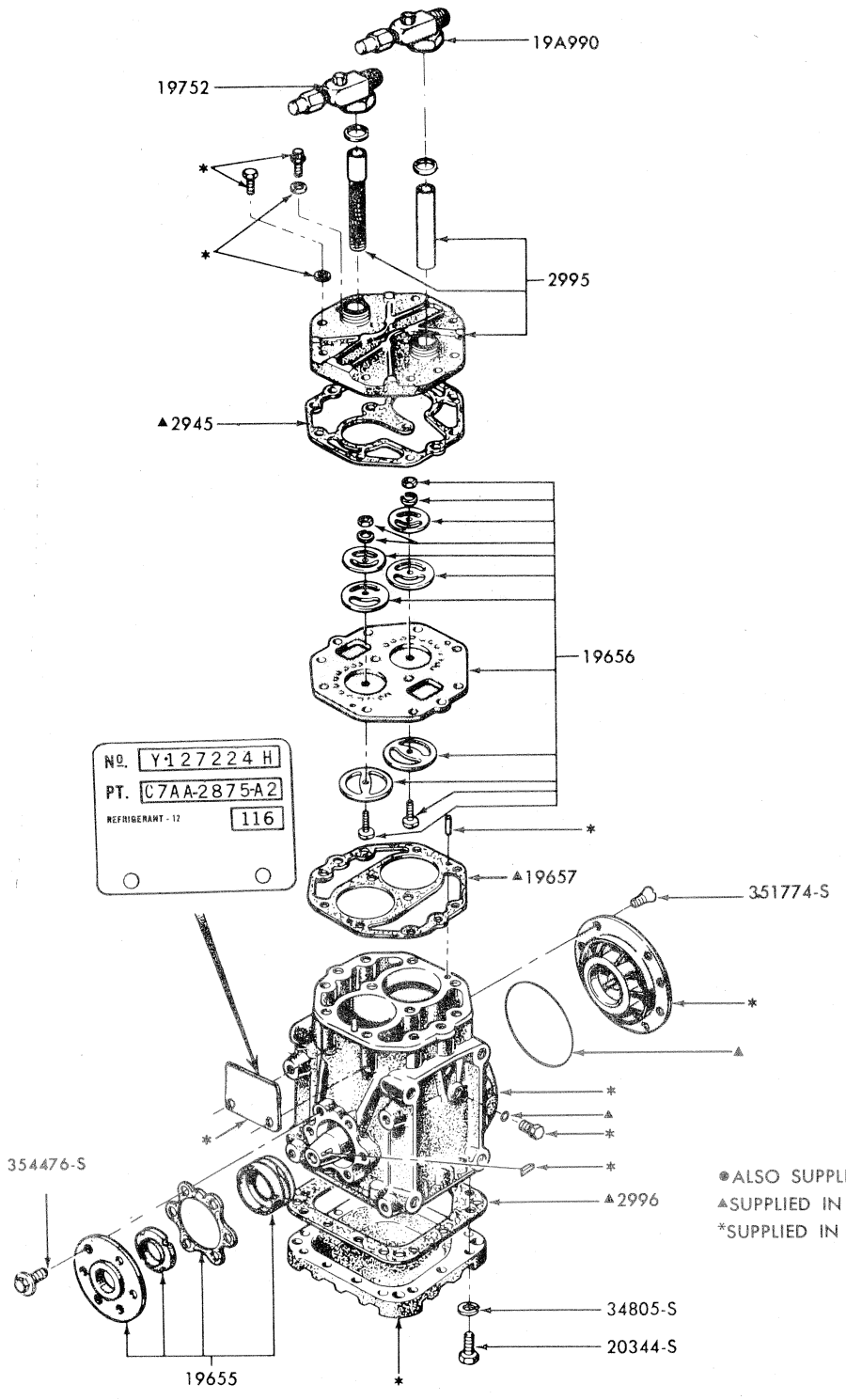

*ALSO SUPPLIED IN 19B684 GASKET KIT
▲SUPPLIED IN 19B684 GASKET KIT ONLY
*SUPPLIED IN 19703 COMPRESSOR ASSEMBLY ONLY

AIR CONDITIONER COMPRESSOR PARTS

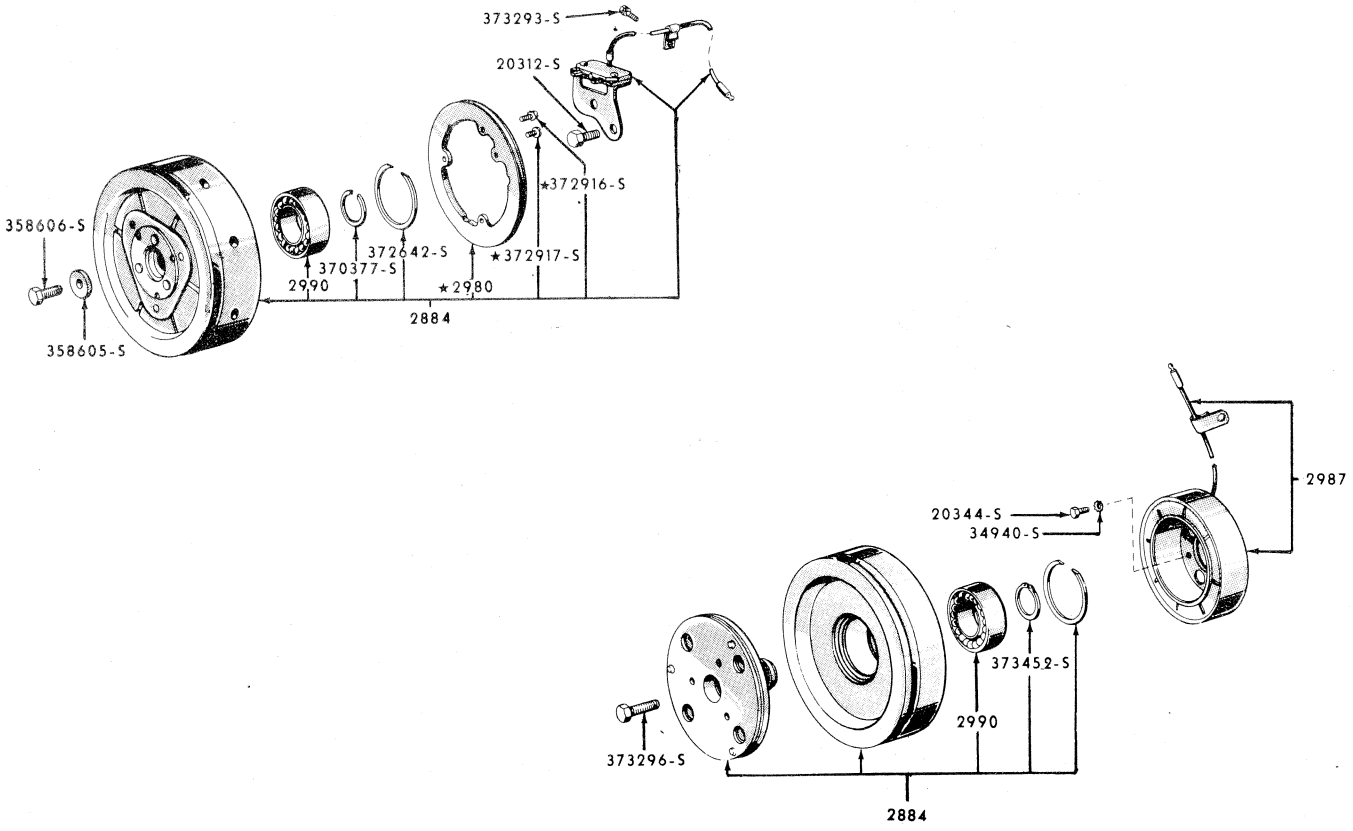

PULLEY AND CLUTCH - COMPRESSOR DRIVE

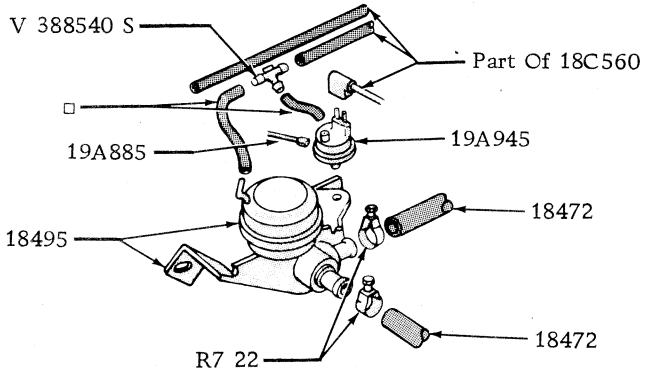

WATER CONTROL VALVE & COMPRESSOR CLUTCH SWITCH

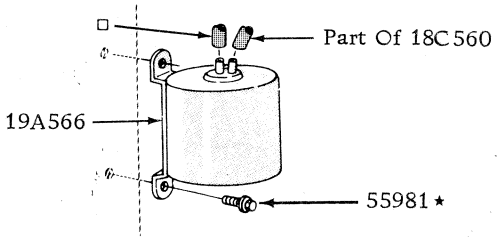

VACUUM RESERVOIR

□ Cut From 17543 Bulk Hose

TYPICAL TEMPERATURE CONTROL VALVE & VACUUM RESERVOIR INSTALLATION

Accessories

MODEL	BODY TYPE	REMARKS	UNIT	PART NUMBER		
– – AIR CONDITIONER – UNDER DASH – SLIMLINE TYPE						
XA/B, ZF/G	All	Unit complete – less bezel – 6 cyl. – manual steering only – reciprocating compressor	1	XA	19B968	A
XA/B, ZF/G	All	Unit complete – less bezel – 8 cyl. – reciprocating compressor	1	XA	19B968	B
XA/B, ZF/G	All	Unit complete – less bezel – 6 cyl. – manual steering only – 'rotary' compressor	1	XA	19B968	C
XA/B, ZF/G	All	Unit complete – less bezel – 8 cyl. – rotary compressor	1	XA	19B968	D
XA/B, ZF/G	All	Bezel – use with slimline unit	1	XA	19850	E
XA/B, ZF/G	All	Fan assy. – heavy duty – 8 cyl. only	1	AYA 17 KT		
– – AIR CONDITIONER – UNDER DASH – STANDARD TYPE						
XA/B, ZF/G	All	Unit complete – 6 cyl. – manual steering only – reciprocating compressor	1	XA	19B968	E
XA/B, ZF/G	All	Unit complete – 8 cyl. – reciprocating compressor	1	XA	19B968	F
XA/B, ZF/G	All	Unit complete – 6 cyl. – manual steering only – rotary compressor	1	XA	19B968	G
XA/B, ZF/G	All	Unit complete – 8 cyl. – 'rotary' compressor	1	XA	19B968	H
XA/B, ZF/G	All	Fan assy. – heavy duty – 8 cyl. only	1	AYA 17 KT		
– – AIR CONDITIONER COMPONENT KITS						
		NOTE: Only available for replacement purposes.				
XA/B, ZF/G	All	Compressor – reciprocating	1	XW	19703	A
XA/B, ZF/G	All	Compressor – rotary – includes clutch	1	TC 19703	C	
XA/B, ZF/G	All	Clutch – 6 & 8 cyl. – with reciprocating compressor	1	XW	2884	A
XA/B, ZF/G	All	Condensor – use with std. A/C – O.R.B. XA-19A615-C	1	XY	19A615	B
XA/B, ZF/G	All	Condensor – use with slimline A/C	1	XA	19A615	C
– – ALARM & WIRING KIT – ANTI THEFT						
XA/B, ZF/G	All	O.N.R.	1	XY	19005	A
– – BUMPER BAR GUARD – KIT						
XA, ZF/G	All	Front	1	XA	18412	A
XA/B	54, 65	Rear	1	XA	18412	B
XA/B	71	Rear	1	XA	18412	C
ZF/G	All	Rear	1	ZF	18412	A
XB	All	Front	1	XB	18412	B
– – CABLES BATTERY BOOST						
XA/B, ZF/G	All	Medium duty	1	R6 146		
XA/B, ZF/G	All	Heavy duty	1	R6 147		
– – CIGAR LIGHTER						
XA/B	All		1	XA	15A044	A
– – CLOCK ASSY.						
XA/B	All		1	XA	15000	A
– – DECALS						
XA/B, ZF/G	All	Alternator warning	1	XA	10A399	A
XA/B, ZF/G	All	Radiator warning – O.N.R.	1	R1 150		
XA/B, ZF/G	All	Oil warning	1	R1 151		
XA/B, ZF/G	All	Brake fluid warning	1	R1 152		
XA/B, ZF/G	54A,B,C,D,E, 65B,D	Tyre decal – 6 cyl. – to 2/75	1	R1 179		
XB	54A,B,C,D, 65B,D	Tyre decal – 6 cyl. – from 2/75	1	XB	1532	CB*
ZG	54E	Tyre decal – 6 cyl. – from 2/75	1	ZG	1532	AB*
XA/B	71	Tyre decal – 6 cyl.	1	R1 180		
XA/B	66, 78	Tyre decal – 6 cyl. – 10 cwt. – to 2/75	1	R1 181		
XB	66, 78	Tyre decal – 6 cyl. – 10 cwt. – from 2/75	1	XB	1532	KD*
XA/B	66, 78	Tyre decal – 6 cyl. – 15 cwt.	1	R1 182		
XA/B, ZF/G	54A,B,C,D,E,G, 65B,D	Tyre decal – 302 c.i.d. – to 2/75	1	R1 184		
XB, ZG	54A,B,C,D,E,G, 65B,D	Tyre decal – 302 c.i.d. – from 2/75	1	XB	1532	CD*
XA/B	71	Tyre decal – 302 c.i.d.	1	R1 185		
XA/B	66, 78	Tyre decal – 302 c.i.d. – 10 cwt. – to 2/75	1	R1 186		
XB	66, 78	Tyre decal – 302 c.i.d. – 10 cwt. – from 2/75	1	XB	1532	LD*

MODEL	BODY TYPE	REMARKS	UNIT	PART NUMBER		
– – DECALS (CONTINUED)						
XA/B	66, 78	Tyre decal – 302 c.i.d. – 15 cwt.	1	R1 187		
XA/B, ZF/G	54A,B,C,D,E,G, 65B,D	Tyre decal – 351 c.i.d. 2V – to 2/75	1	R1 188		
XB, ZG	54A,B,C,D,E,G, 65B,D	Tyre decal – 351 c.i.d. 2V – from 2/75	1	XB	1532	DB*
XA/B	71	Tyre decal – 351 c.i.d.	1	R1 189		
XA/B	66, 78	Tyre decal – 351 c.i.d. – 10 cwt. – to 2/75	1	R1 190		
XB	66, 78	Tyre decal – 351 c.i.d. – 10 cwt. – from 2/75	1	XB	1532	MC*
XA/B	54H, 65H	Tyre decal – 351 c.i.d. 4V – to 2/75	1	R1 191		
XB	54H, 65H	Tyre decal – 351 c.i.d. 4V – from 2/75	1	XB	1532	EB*
XA/B, ZF/G	All	Tyre decal – 6 cyl. – winter tread – O.N.R.	1	R1 193		
– – DEMISTER – BACK WINDOW – ELECTRICAL						
XA/B, ZF/G	All	Kit – 12V – 30" x 10" area	1	R6 172 B		
– – DUST REFLECTOR – KIT						
XA/B	71		1	XA	19008	A
– – HEADLAMP GUARD						
XA/B	All	Hinged – chromed	1	XR	13005	A
– – HOOD SCOOP KIT						
XA	All exc. 54H, 65H		1	XA	16A633	KT
– – HORN						
XA/B	All	High note	1	XA	13801	A
XA, ZF	All	Universal alpine horns (matched pair)	1	R6 188		
– – LAMP – KITS						
XA/B	All	Headlamp – quartz iodine	1	XA	18207	A
XA/B	All	Lens and reflector assy. – P/o XA-18207-A kit	1	XA	13011	A
XA/B	All	Bulb – P/o XA-18207-A kit	1	XA	13007	A
XA/B	All	Headlamp – hi performance	2	HP	13007	A
– – LICENCE PLATE – FRAME						
XA/B, ZF/G	All		1	R6 135		
– – MAT – RUBBER FLOOR						
XA/B, ZF/G	All	Black – rectangular type	a/r	R6 11		
XA/B, ZF/G	All	Blue – rectangular type	a/r	R6 12		
XA/B, ZF/G	All	Red – rectangular type	a/r	R6 13		
XA/B, ZF/G	All	Grey – rectangular type	a/r	R6 175		
XA/B, ZF/G	All	Sandy brown – rectangular type	a/r	R6 152		
XA/B, ZF/G	All	Black – deluxe – contoured type	a/r	R6 155 A		
XA/B, ZF/G	All	Blue – deluxe – contoured type	a/r	R6 155 B		
XA/B, ZF/G	All	Red – deluxe – contoured type	a/r	R6 155 C		
XA/B, ZF/G	All	Sandy brown – deluxe – contoured type	a/r	R6 155 E		
– – MIRRORS						
XA/B, ZF/G	All	Tissue dispenser & vanity mirror	1	R6 131		
XA, ZF	All	Prismatic day/night	1	CH	18402	A
XB, ZG	All	Prismatic day/night	1	XB	18402	A
XA/B, ZF/G	All	Mirror – L.H. – manual control – O.R.C. (1) EJ-17A703-A, (1) XA-17C720-AA, (2) V-388191-S36, (2) V-388196-S36	1	XA	18402	A
XA/B, ZF/G	All	Mirror – R.H. – remote control – O.R.C. (1) EJ-17A 702-A, (1) XA-17C720-B, (2) V-388191-S36, (2) V-388196-S36	1	XA	18402	B
XA, ZF	All	Vanity mirror – glove box mounted	1	XW	17A679	A
XA/B, ZF/G	All	Mirror – caravan towing	1	XW	18402	E
– – MOULDING KIT – BODY SIDE – PROTECTION						
XA	54	Black – O.N.R.	1	XA	19600	A
ZF/G	All	Black	1	ZF	19600	A
XA	65	Black	1	XA	19600	C
XA	71	Black	1	XA	19600	B
XA	66, 78	Black	1	XA	19600	D

MODEL	BODY TYPE D.	REMARKS	UNIT	PART NUMBER
– – MOULDING KIT – BODY SIDE – PROTECTION – SELF ADHESIVE (31' LENGTH INCLUDES 4 SPEARS)				
XA/B, ZF/G	All	Black	1	R6 202 A
XA/B, ZF/G	All	Silver	1	R6 202 B
XA/B, ZF/G	All	White	1	R6 202 C
XA/B, ZF/G	All	Light blue	1	R6 202 D
XA/B, ZF/G	All	Dark blue	1	R6 202 E
XA/B, ZF/G	All	Light green	1	R6 202 F
XA/B, ZF/G	All	Dark green	1	R6 202 G
XA/B, ZF/G	All	Gold	1	R6 202 H
XA/B, ZF/G	All	Tan	1	R6 202 J
XA/B, ZF/G	All	Brown	1	R6 202 K
XA/B, ZF/G	All	Red	1	R6 202 L
XA/B, ZF/G	All	Woodgrain	1	R6 202 M
XA/B, ZF/G	All	Parchment	1	R6 202 N
XA/B, ZF/G	All	Individual spears	a/r	R6 201
– – MOULDING KIT – BODY SIDE – PROTECTION – SELF ADHESIVE (BULK ROLL 125' LENGTH INCLUDES 16 SPEARS)				
XA/B, ZF/G	All	Black	1	R6 200 A
XA/B, ZF/G	All	Silver	1	R6 200 B
XA/B, ZF/G	All	White	1	R6 200 C
XA/B, ZF/G	All	Light blue	1	R6 200 D
XA/B, ZF/G	All	Dark blue	1	R6 200 E
XA/B, ZF/G	All	Light green	1	R6 200 F
XA/B, ZF/G	All	Dark green	1	R6 200 G
XA/B, ZF/G	All	Gold	1	R6 200 H
XA/B, ZF/G	All	Tan	1	R6 200 J
XA/B, ZF/G	All	Brown	1	R6 200 K
XA/B, ZF/G	All	Red	1	R6 200 L
XA/B, ZF/G	All	Woodgrain	1	R6 200 M
XA/B, ZF/G	All	Parchment	1	R6 200 N
XA/B, ZF/G	All	Individual spears	a/r	R6 201
– – MOULDING KIT – DOOR EDGE GUARD				
XA/B, ZF/G	54, 71	Front	1	XA 54 20910 A
XA/B, ZF/G	54, 71	Front & rear doors	1	XA 54 20910 B
XA/B	65, 66, 78		1	XA 65 20910 A
– – MUDFLAP KIT				
XA/B, ZF/G	All	Front	1	XA 16268 A
XA/B, ZF/G	All	Rear	1	XA 16360 B
– – ORNAMENT KIT				
XA, ZF	All	Fender ornament	1	XA 16A164 A
XA, ZF	All	Bonnet Ornament	1	XA 16607 A
XA/B	All	Hood lock pin kit – except GT	1	XA 16700 KT
XA/B	All	Screw & washer – P/O XA-16700-KT kit	2	42744 S36
XA/B	All	Nut & washer – P/o kit XA-16700-KT	2	34657 S36
– – PETROL CAPS				
XA/B	All exc. 54H, 65H	Non locking – chromed – to 12/74	1	AFC 5
XB	All exc. 54H, 65H	Non locking – chromed – from 12/74	1	AFC 15*
XA/B	All exc. 54H, 65H	Locking – chromed – to 12/74	1	AFC 55
XB	All exc. 54H, 65H	Locking – chromed – from 12/74	1	AFC 73*
XA/B	All exc. 54H, 65H	Locking – flip type – to 12/74	1	AFC 71
XA/B	54H, 65H	Locking – flip type – to 12/74	1	AFC 70
ZF/G	All	Locking – chromed – to 12/74	1	AFC 53
ZG	All	Locking – chromed – from 12/74	1	AFC 14*
– – PROTECTOR – WINDSCREEN				
XA/B, ZF/G	All exc. 65		1	XA 19000 A
XA/B	65		1	XA 19000 B

MODEL	BODY TYPE	REMARKS	UNIT	PART NUMBER
– – RADIO & STEREO TAPE PLAYERS & COMPONENTS				
XA/B, ZF/G	All	Deluxe – push button	1	XA 18805 A
XA/B, ZF/G	All	Deluxe – manual	1	XA 18805 B
XA/B, ZF/G	All	Super fringe – push button	1	XA 18805 C
XA/B, ZF/G	All	Super fringe – manual – O.N.R.	1	XA 18805 D
XA/B, ZF/G	All	Radio earthing kit – 8 cyl.	1	XW 18A805 A
XA/B, ZF/G	All	Aerial – normal	1	XL 18813 A
XA/B, ZF/G	All	Aerial – lockdown	1	XW 18813 C
XA/B, ZF/G	All	Aerial – rear deck – O.N.R.	1	XR 18813 A
XA/B, ZF/G	All	Aerial – motorised	1	XA 18813 B
XA/B, ZF/G	All	Base gasket – aerial normal	1	XA 18813 AA
XA/B, ZF/G	All	Grille – front speaker – cowl side panel – paint to suit	2	XB 18837 E
XA/B, ZF/G	All	Extension speaker kit	1	XA 18875 A
XA/B, ZF/G	All	Radio/stereo (cartridge) – basic unit – less aerial	1	XA 19A035 A
XA/B, ZF/G	All	Radio/stereo (cartridge) – component kit	1	XA 18875 AS
XB, ZG	All	Radio/stereo (cassette) – basic unit – less areial	1	XB 19A035 A
XB, ZG	All	Radio/stereo (cassette) – component kit	1	XB 18875 AS
XA/B, ZF/G	All	Stereo tape player – cartridge – (universal)	1	UN 19B035 A
XA/B, ZF/G	All	Speaker kit – stereo tape player – boxed type – (universal)	1	UN 18875 A
XA/B, ZF/G	All	Speaker kit – stereo tape player – shelf type – (universal)	1	UN 18875 B
XB, ZG	All	Demonstration tape – stereo tape player	1	PL 19A059 A
XB, ZG	All	Condenser – noise suppression – with radio or radio/stereo	2	XA 18841 B*
– – REAR BOOT LID RELEASE				
XA/B	54	Manual	1	XA 54 43200 A
ZF/G	All	Manual	1	ZF 54 43200 A
– – ROCKER PANEL – MOULDING KIT				
XA/B	54		1	XA 18243 A
XA/B	54	Rocker & wheel arch	1	XA 18243 B
XA/B	65	Rocker & wheel arch – O.N.R.	1	XA 18243 C
– – RE-APPEARANCING DECALS				
XA, ZF	All	Radiator decal – Motorcraft (pack of 100) – O.N.R.	1	R1 150
XA, ZF	All	Oil filler cap decal – Motorcraft (pack of 100) – O.N.R.	1	R1 151
XA, ZF	All	Brake fluid decal – Motorcraft (pack of 100)	1	R1 152
XA	All	Engine decal – 200 cubic inches (pack of 25)	1	R1 156
XA, ZF	All	Engine decal – 4.7 litres (pack of 25)	1	R1 158
XA, ZF	All	Engine decal – 5.0 litres (pack of 25)	1	R1 159
– – ROOF RACK				
XA/B, ZF/G	54		1	XR 18320 A
XA/B	71		1	XR 18320 B
XA/B	71	Chrome	1	XA 18320 C
XA/B, ZF/G	All	Ski-rack	1	EH 18320 A
– – ROPE RAIL KIT				
XA/B	66		1	XA 19010 A
– – SCREEN – GRILLE INSECT				
XA	All		1	XA 18690 A
ZF	All		1	ZF 18690 A
XB	All		1	XB 18690 A
ZG	All		1	ZG 18690 A
– – SEAT COVERS – FRONT SEAT BENCH TYPE				
XA/B	All	Parchment – w/out arm rest	1	R6 161 A
XA/B	All	Black – w/out arm rest	1	R6 161 B
XA/B	All	Dark blue – w/out arm rest	1	R6 161 C
XA/B	All	Brown – w/out arm rest	1	R6 161 D
XA/B	All	Burgundy – w/out arm rest	1	R6 161 E
XA/B	All	Red – w/out arm rest	1	R6 161 F
XA/B	All	Green – w/out arm rest	1	R6 161 G
XA/B, ZF/G	All	Parchment – with arm rest	1	R6 171 A
XA/B, ZF/G	All	Black – with arm rest	1	R6 171 B
XA/B, ZF/G	All	Dark blue – with arm rest	1	R6 171 C
XA/B, ZF/G	All	Brown – with arm rest	1	R6 171 D
XA/B, ZF/G	All	Burgundy – with arm rest	1	R6 171 E
XA/B, ZF/G	All	Red – with arm rest	1	R6 171 F
XA/B, ZF/G	All	Green – with arm rest	1	R6 171 G

MODEL	BODY TYPE	REMARKS	UNIT	PART NUMBER
– – SEAT COVERS – FRONT SEAT BUCKET TYPE				
XA/B, ZF/G	All	Parchment – fabric type	1	R6 160 A
XA/B, ZF/G	All	Black – fabric type	1	R6 160 B
XA/B, ZF/G	All	Dark blue – fabric type	1	R6 160 C
XA/B, ZF/G	All	Brown – fabric type	1	R6 160 D
XA/B, ZF/G	All	Burgundy – fabric type	1	R6 160 E
XA/B, ZF/G	All	Red – fabric type	1	R6 160 F
XA/B, ZF/G	All	Green – fabric type	1	R6 160 G
– – SEAT COVERS – FRONT BUCKET SEAT – LAMBSKIN				
XA/B, ZF/G	All	Parchment	1	R6 204 E
XA/B, ZF/G	All	White	1	R6 204 H
– – SEAT COVERS – REAR SEAT				
XA/B, ZF/G	54A,B,C,D,E	Parchment – without arm rest	1	R6 162 A
XA/B, ZF/G	54A,B,C,D,E	Black – without arm rest	1	R6 162 B
XA/B, ZF/G	54A,B,C,D,E	Dark blue – without arm rest	1	R6 162 C
XA/B, ZF/G	54A,B,C,D,E	Brown – without arm rest	1	R6 162 D
XA/B, ZF/G	54A,B,C,D,E	Burgundy – without arm rest	1	R6 162 E
XA/B, ZF/G	54A,B,C,D,E	Red – without arm rest	1	R6 162 F
XA/B, ZF/G	54A,B,C,D,E	Green – without arm rest	1	R6 162 G
XA/B, ZF/G	54B,C,D,E	Parchment – with arm rest	1	R6 165 A
XA/B, ZF/G	54B,C,D,E	Black – with arm rest	1	R6 165 B
XA/B, ZF/G	54B,C,D,E	Dark blue – with arm rest	1	R6 165 C
XA/B, ZF/G	54B,C,D,E	Brown – with arm rest	1	R6 165 D
XA/B, ZF/G	54B,C,D,E	Burgundy – with arm rest	1	R6 165 E
XA/B, ZF/G	54B,C,D,E	Red – with arm rest	1	R6 165 F
XA/B, ZF/G	54B,C,D,E	Green – with arm rest	1	R6 165 G
ZF/G	54G	Parchment – with arm rest	1	R6 187 A
ZF/G	54G	Black – with arm rest	1	R6 187 B
ZF/G	54G	Dark blue – with arm rest	1	R6 187 C
ZF/G	54G	Brown – with arm rest	1	R6 187 D
ZF/G	54G	Burgundy – with arm rest	1	R6 187 E
ZF/G	54G	Red – with arm rest	1	R6 187 F
ZF/G	54G	Green – with arm rest	1	R6 187 G
XA/B	65B	Parchment – without arm rest	1	R6 185 A
XA/B	65B	Black – without arm rest	1	R6 185 B
XA/B	65B	Dark blue – without arm rest	1	R6 185 C
XA/B	65B	Brown – without arm rest	1	R6 185 D
XA/B	65B	Burgundy – without arm rest	1	R6 185 E
XA/B	65B	Red – without arm rest	1	R6 185 F
XA/B	65B	Green – without arm rest	1	R6 185 G
XA/B	65D,H	Parchment – with arm rest	1	R6 186 A
XA/B	65D,H	Black – with arm rest	1	R6 186 B
XA/B	65D,H	Dark blue – with arm rest	1	R6 186 C
XA/B	65D,H	Brown – with arm rest	1	R6 186 D
XA/B	65D,H	Burgundy – with arm rest	1	R6 186 E
XA/B	65D,H	Red – with arm rest	1	R6 186 F
XA/B	65D,H	Green – with arm rest	1	R6 186 G
– – SPOILER – FRONT				
XA/B	All	Without cooling slots	1	XA 17A779 KT
XA/B	All	With cooling slots	1	XA 17A779 BKT
XA/B	All	Screw & washer – P/o kit XA-17A779-KT – XA-17A779-BKT	4	31498 S2
XA/B	All	Screw & washer – P/o kit XA-17A779-KT – XA-17A779-BKT	6	57306 S2
– – SPOILER – REAR DECK LID				
XA/B, ZF/G	54, 65	Universal air foil	1	R6 68 A
XA/B	54	Custom moulded	1	XA 54 442A02 KT
– – SPRING KIT – REAR HELPER				
XA/B, ZF/G	All	Exc. 54H, 65H, 71 & sports handling – complete less clamp kit	1	XA 5A589 A
XA/B	All	Clamp kit – use with XA-5A589-A	1	XA 5A589 B
ZF/G	All	Clamp kit – use with XA-5A589-A	1	ZF 5A589 B
XA/B	71		1	XA 5A589 C
XA/B	54H, 65H	Also sports handling option	1	XA 5A589 D
– – STEERING WHEEL KIT				
XA	All	Sports/rally	1	XA 3600 KT

MODEL	BODY TYPE	REMARKS	UNIT	PART NUMBER		
– – SUNVISOR – EXTERNAL						
XA/B, ZF/G	All exc. 65	Steel	1	XA	18236	A
XA/B, ZF/G	All exc. 65	Mesh – O.N.R.	1	XA	18236	B
XA/B, ZF/G	All exc. 65	Black vinyl	1	XA	18236	C
XA/B, ZF/G	All exc. 65	Beige vinyl	1	XA	18236	D
XA/B, ZF/G	All exc. 65	Brown vinyl	1	XA	18236	F
XA/B	65	Steel	1	XA	18236	E
XA/B, ZF/G	All	Hardware kit	1	XA	18235	A
– – TOWBAR – LESS DETACHABLE BRACKET						
XA/B, ZF/G	All exc. 66, 78		1	XA	19A009	A
XA/B	66, 78		1	XA	19A009	C
– – TOWBAR BRACKET						
XA/B, ZF/G	54, 65	Painted – std. lift	1	XA	19B011	A
XA/B, ZF/G	54, 65	Chromed – std. lift	1	XA	19C011	A
XA/B	71	Painted – std. lift	1	XA	19A012	A
XA/B, ZF/G	54, 65	Painted – high lift	1	XA	19A012	A
XA/B	71	Chromed – std. lift	1	XA	19C012	A
XA/B, ZF/G	54, 65	Chromed – high lift	1	XA	19C012	A
XA/B	66, 78	Painted – std. lift	1	XA	19B011	C
XA/B	66, 78	Chromed – std. lift	1	XA	19C011	C
XA/B	66, 78	Painted – "Low lift"	1	XA	19B012	C
– – TYRE PUMP						
XA/B, ZF/G	All	Foot operated	1	N	17052	A
– – VEHICLE – TRAILER ELECTRICAL INSTALLATION						
XA/B, ZF/G	All exc. 66, 78		1	XA	14A461	A
XA/B	66, 78		1	XA	14A461	C
XA/B, ZF/G	All	Socket – P/o XA-14A461-A & C kits	1	XA	14A461	B
XA/B, ZF/G	All	Plug	1	XR	14C461	A
XA/B, ZF/G	All	Flasher unit – 3 lamp	1	XR	13350	A
– – VENETIAN SHADE						
XA/B, ZF/G	54	White	1	XA	18246	A
XA/B, ZF/G	54	Black – O.N.R.	1	XA	18246	B
XA/B	65	Black – external louvre	1	XA	18246	D
XA/B, ZG	71	Rear quarter window – set of 2 shades	1	XA	18247	A
– – WEATHERSHIELD						
XA/B, ZF/G	54, 71	Tinted – R.H. – vented door	1	XA	18492	A
XA/B, ZF/G	54, 71	Tinted – R.H. – ventless door – "air flow"	1	XA	18492	D
XA/B, ZF/G	54, 71	Tinted – R.H. – ventless door	1	XA	18492	B
XA/B, ZF/G	54, 71	Clear – R.H. – ventless window	1	XA	18492	C
XA/B, ZF/G	54, 71	Clear – R.H. – ventless door	1	XA	18493	A
– – WEATHERSHIELD – HARDWARE KIT						
XA/B, ZF/G	All	Vented door	1	XA	18A492	A
XA/B, ZF/G	All	Ventless door	1	XA	18A492	B
– – WHEEL DISC AND COVERS						
XA/B, ZF/G	All	Disc – deluxe – except with radial tyres	4	XW	18303	A
XA/B, ZF/G	All	Disc – deluxe – with radial tyres	4	XW	18303	B
XA	All	Full wheel cover	4	ARD2DA	1130	BA
ZF	All	Full wheel cover	4	ARD20A	1130	AA
XB	All	Full wheel cover	4	XB	1130	B
ZG	All	Full wheel cover	4	ZG	1130	A
– – WHEEL NUT KIT – LOCKING						
XA/B, ZF/G	All	Set of (4) – use with XY-1007-KT	1	XY	1A012	KT
– – WHEEL KIT – SPORTS ROAD						
XA/B, ZF/G	All	14" x 6"	4	XY	1007	KT
– – RALLY STRIPE KIT						
XA, ZF	54, 71	Black	1	XA	19A600	A1A
XA, ZF	54, 71	Gold	1	XA	19A600	A1G
XA, ZF	54, 71	Silver	1	XA	19A600	A1L
XA, ZF	54, 71	Orange	1	XA	19A600	A1V
XA	65	Black	1	XA	19B600	A1A
XA	65	Gold	1	XA	19B600	A1G
XA	65	Silver	1	XA	19B600	A1L
XA	65	Orange	1	XA	19B600	A1V

MODEL	BODY TYPE	REMARKS	UNIT	PART NUMBER

Paint Section

NOTE: Before ordering paint obtain paint code from Vehicle identification plate and match to last character of Part Number suffix.

Paint Code "P" indicates vehicle supplied in Prime.

XA – ZF

Yellow sand (L119 A) – ½ pint	a/r	XA	19503	AA
– 1 quart – O.N.R.	a/r	XA	19503	DA
Onyx black (1724 A) – ½ pint	a/r	XR	19503	AB
– 1 quart – O.N.R.	a/r	XR	19503	DB
Light blue (L1178 A) – ½ pint	a/r	XA	19503	AC
– 1 quart – O.N.R.	a/r	XA	19503	DC
Pottery beige (L1118 A) – ½ pint	a/r	XA	19503	AE
– 1 quart – O.N.R.	a/r	XA	19503	DE
Blue Teal (L1112 A) – ½ pint	a/r	XA	19503	AG
– 1 quart – O.N.R.	a/r	XA	19503	DG
Jewel green (Met.) (M3595 A) – ½ pint	a/r	EH	19503	A1
– 1 quart – O.N.R.	a/r	EH	19503	D1
Calypso green (Met.) (L1110 A) – ½ pint	a/r	XA	19503	AJ
– 1 quart – O.N.R.	a/r	XA	19503	DJ
Blaze blue (L1120 A) – ½ pint – O.N.R.	a/r	XA	19503	AM
– 1 quart – O.N.R.	a/r	XA	19503	DM
Port wine (3059 A) – ½ pint	a/r	XA	19503	AN
– 1 quart – O.N.R.	a/r	XA	19503	DN
Yellow fire (L1125 A) – ½ pint	a/r	XA	19503	AQ
– 1 quart – O.N.R.	a/r	XA	19503	DQ
Copper bronze (Met.) (L1130 A) – ½ pint	a/r	XA	19503	AR
– 1 quart – O.N.R.	a/r	XA	19503	DR
Ultra white (L111 A) – ½ pint	a/r	XY	19503	AU
– 1 quart – O.N.R.	a/r	XY	19503	DU
Shadow grey (Met.) (L1142 A) – ½ pint – O.N.R.	a/r	XA	19503	AV
– 1 quart – O.N.R.	a/r	XA	19503	DV
Red pepper (L1474 A) – ½ pint	a/r	XA	19503	AX
– 1 quart – O.N.R.	a/r	XA	19503	DX
Kelly green (Met.) (L1121 A) – ½ pint	a/r	XA	19503	AY
– 1 quart – O.N.R.	a/r	XA	19503	DY
Wild violet (Met.) (L1126 A) – ½ pint	a/r	EH	19503	AZ
– 1 quart – O.N.R.	a/r	EH	19503	DZ
Deep ivy (Met.) (L1123 A) – ½ pint	a/r	XA	19503	A4
– 1 quart – O.N.R.	a/r	XA	19503	D4
Walnut glow (Met.) (L1124 A) – ½ pint	a/r	XA	19503	A7
– 1 quart – O.N.R.	a/r	XA	19503	D7
Cosmic blue (Met.) (L1113 A) – ½ pint	a/r	XA	19503	A8
– 1 quart – O.N.R.	a/r	XA	19503	D8

MODEL	BODY TYPE	REMARKS	UNIT	PART NUMBER

XB – ZG

Mushroom beige (L1173 A) – ½ pint	a/r	XB	19503	AL
– 1 quart	a/r	XB	19503	DL
Mulberry (Met.) (L1180 A) – ½ pint	a/r	XB	19503	A6
– 1 quart – O.N.R.	a/r	XB	19503	D6
Deep aqua (L1179 A) – ½ pint	a/r	XB	19503	A5
– 1 quart – O.N.R.	a/r	XB	19503	D5
Emerald fire (Met.) (L1174 A) – ½ pint	a/r	XB	19503	AP
– 1 quart – O.N.R.	a/r	XB	19503	DP
Burnt orange (L1170 A) – ½ pint	a/r	XB	19503	AU
– 1 quart	a/r	XB	19503	DU
Frosted Lime (Met.) (L1175 A) – ½ pint – O.N.R.	a/r	XB	19503	AF
– 1 quart – O.N.R.	a/r	XB	19503	DF
Tropic gold (Met.) (L1172 A) – ½ pint	a/r	XB	19503	AH
– 1 quart – O.N.R.	a/r	XB	19503	DH
Apollo blue (Met.) (L1177 A) – ½ pint	a/r	XB	19503	AV
– 1 quart – O.N.R.	a/r	XB	19503	DV
Tropicano green (Met.) (L1176 A) – ½ pint	a/r	XB	19503	A2
– 1 quart – O.N.R.	a/r	XB	19503	D2
Yellow blaze (L1171 A) – ½ pint	a/r	XB	19503	AM
– 1 quart – O.N.R.	a/r	XB	19503	DM
Sandstone beige (L1510 A) – ½ pint – to 5/74	a/r	XB	19503	A9
– 1 quart – to 5/74	a/r	XB	19503	D9
Sandstone beige (L1511 A) – 250 ml. – from 5/74	a/r	XB	19503	AE*
Onyx black (1724 A) – ½ pint	a/r	XR	19503	AB
– 1 quart – O.N.R.	a/r	XR	19503	DB
Polar white (L1619 A) – ½ pint (use XW 19503 AA)	a/r		19503	A3
– 1 quart (use XW 19503 DA)	a/r		19503	D3
Polar white (L1619 A) – ½ pint	a/r	XW	19503	AA
– 1 quart – O.N.R.	a/r	XW	19503	DA
Yellow sand (L1119 A) – ½ pint	a/r	XA	19503	AA
– 1 quart – O.N.R.	a/r	XA	19503	DA
Sky view blue (L1178 A) – ½ pint	a/r	XA	19503	AC
– 1 quart – O.N.R.	a/r	XA	19503	DC
Copper bronze (Met.) (L1130 A) – ½ pint	a/r	XA	19503	AR
– 1 quart – O.N.R.	a/r	XA	19503	DR
Red pepper (L1474 A) – ½ pint	a/r	XA	19503	AX
– 1 quart – O.N.R.	a/r	XA	19503	DX
Walnut glow (Met.) (L1124 A) – ½ pint	a/r	XA	19503	A7
– 1 quart – O.N.R.	a/r	XA	19503	D7
Tango (L1205 A) – 250 ml. – from 1/75	a/r	XB	19503	AK
Banana Blush (L1207 A) – 250 ml. – from 1/75	a/r	XB	19503	AG
Russet (L1195 A) – 250 ml. – from 1/75	a/r	XB	19503	AW

MODEL	BODY TYPE	REMARKS	UNIT	PART NUMBER	
– – 19K503 – – KIT – PAINT TOUCH-UP (EXTERIOR)					
		Consists of:			
		1 oz. Paint Thinner			
		1 Sheet Wet-N-Dry			
		2 Cotton Buds			
		1 oz. Touch Up Paint			
XA,ZF	All	Jewel green (Met.) – O.N.R.	EH	19K503	I
XA,ZF	All	Yellow sand – O.N.R.	XA	19K503	A
XA,ZF	All	Onyx black – O.N.R.	XW	19K503	B
XA,ZF	All	Pottery beige – O.N.R.	XA	19K503	E
XA,ZF	All	Blue teal – O.N.R.	XA	19K503	G
XA,ZF	All	Calypso green (Met.) – O.N.R.	XA	19K503	J
XA,ZF	All	Blaze blue – O.N.R.	XA	19K503	M
XA,ZF	All	Port wine – O.N.R.	XA	19K503	N
XA,ZF	All	Yellow fire – O.N.R.	XA	19K503	Q
XA,ZF	All	Copper bronze – O.N.R.	XA	19K503	R
XA,ZF	All	Ultra white – O.N.R.	XY	19K503	U
XA,ZF	All	Shadow grey (Met.) – O.N.R.	XA	19K503	V
XA,ZF	All	Red pepper – O.N.R.	XA	19K503	X
XA,ZF	All	Kelly green (Met.) – O.N.R.	XA	19K503	Y
XA,ZF	All	Wild violet (Met.) – O.N.R.	EH	19K503	Z
XA,ZF	All	Deep ivy (Met.) – O.N.R.	XA	19K503	4
XA,ZF	All	Walnut glow (Met.) – O.N.R.	XA	19K503	7
XA,ZF	All	Cosmic blue (Met.) – O.N.R.	XA	19K503	8
– – 19506 – – PAINT – TOUCH UP – INTERIOR					
XA,ZF		Black (L1439 G) – ½ pint	a/r	XA	19503 AB
XA,ZF		Burgundy (L1022 G) – ½ pint – O.N.R.	a/r	XW	19506 AG
XA,ZF		Blue (L1445 G) – ½ pint – O.N.R.	a/r	XA	19506 AL
XA,ZF		Saddle (L1441 G) – ½ pint	a/r	XA	19506 AS
XA,ZF		Bright argent (L1143 G) – ½ pint (use instrument cluster bezel) – O.N.R.	a/r	XA	19506 AC
XA,ZF		Dark argent (L1034 G) – ½ pint (use instrument cluster bezel) – O.N.R.	a/r	XA	19506 AD
XB,ZG		Black (L022 G) – ½ pint – O.N.R.	a/r	XT	19506 AC
XB,ZG		Brown (L1446 G) – ½ pint	a/r	XA	19506 AE
– – 19B542 – – KIT – MOULDING REPAIR					
XB	All	Use to repair fender moulding – XB 16164/5 AA	1	D2AZ	19B542 B

MODEL	BODY TYPE	REMARKS	UNIT	PART NUMBER

BODY PARTS SECTION

QUICK REFERENCE INDEX

GROUP	SECTION
FRONT END	000 030
FLOOR	100
SIDE ASSY	200 240
BACK	400
TOP & ROOF	500
SEATS	600

SOFT TRIM

ILLUSTRATIONS

MODEL	BODY TYPE	REMARKS	UNIT	PART NUMBER
– – 00001 – – BODY ASSY. – WITH DOORS, HOOD, LUGGAGE COMPARTMENT DOOR & FENDERS				
XA	54	6 cyl. – w/out air con.	1	XA 54 00001 A
XA	54	6 cyl. – with air con.	1	XA 54 00001 B
XA	54	All 8 cyl.	1	XA 54 00001 B
XA	54H	351 c.i.d.	1	XA 54 00001 C
XA	65B,D	6 cyl. – without air con.	1	XA 65 00001 A
XA	65B,D	6 cyl. – with air con. – O.N.R.	1	XA 65 00001 B
XA	65B,D	8 cyl. – O.N.R.	1	XA 65 00001 B
XA	65H	351 c.i.d. 4V – with air con. – O.N.R.	1	XA 65 00001 C
XA	71	6 cyl. – single action tailgate	1	XA 71 00001 A
XA	71	6 cyl. – with air con. and all 8 cyl. – single action tailgate	1	XA 71 00001 B
XA	71	6 cyl. – dual action tailgate	1	XA 71 00001 C
XA	71	6 cyl. – with air con. and all 8 cyl. – dual action tailgate	1	XA 71 00001 D
XA	66	6 cyl.	1	XA 66 00001 A
XA	66	8 cyl.	1	XA 66 00001 B
XA	78	6 cyl. – less rear doors	1	XA 78 00001 A
XA	78	8 cyl. – less rear doors	1	XA 78 00001 B
ZF	54E	6 cyl. – O.N.R.	1	ZF 54 00001 A
ZF	All	8 cyl. – O.N.R.	1	ZF 54 00001 B
XB	54	6 cyl.	1	74DA 54 00001 SA
XB	54	8 cyl.	1	74DA 54 00001 TA
XB	65	6 cyl.	1	74DA 65 00001 SA
XB	65	8 cyl.	1	74DA 65 00001 TA
XB	66	6 cyl.	1	74DA 66 00001 SA
XB	66	8 cyl.	1	74DA 66 00001 TA
XB	71	6 cyl.	1	74DA 71 00001 SA
XB	71	8 cyl.	1	74DA 71 00001 TA
XB	78	6 cyl. – less rear doors	1	74DA 78 00001 SA
XB	78	8 cyl. – less rear doors	1	74DA 78 00001 TA
ZG	54	6 cyl.	1	74OA 54 00001 SA
ZG	54	8 cyl.	1	74OA 54 00001 TA
– – 00002 – – BODY ASSY. – LESS DOORS, HOOD, LUGGAGE COMPARTMENT DOOR & FENDERS				
XB	54	6 cyl.	1	74DA 54 00002 SA
XB	54	8 cyl.	1	74DA 54 00002 TA
XB	65	6 cyl.	1	74DA 65 00002 SA
XB	65	8 cyl.	1	74DA 65 00002 TA
XB	66	6 cyl.	1	74DA 66 00002 SA
XB	66	8 cyl.	1	74DA 66 00002 TA
XB	71	6 cyl.	1	74DA 71 00002 SA
XB	71	8 cyl.	1	74DA 71 00002 TA
XB	78	6 cyl.	1	74DA 78 00002 SA
XB	78	8 cyl.	1	74DA 78 00002 TA
ZG	54	6 cyl.	1	74OA 54 00002 SA
ZG	54	8 cyl.	1	74OA 54 00002 TA
– – 001A04 – – DEFLECTOR ASSY. – AIR				
XA/B	71		1	XA 71 001A04 A
XA/B	71	Nut – plastic sealing to attach XA-71-001A04-A	6	353911 S100
– – 01508 – – SUPPORT ASSY. – BRAKE PEDAL (REFER ALSO 2467)				
XA, ZF	All		1	XA 54 015A08 B
XB, ZG	All	Exc. 302 c.i.d. man. trans. – to 12/74	1	XA 54 015A08 B
XB, ZG	All	302 c.i.d. man. trans.	1	XA 54 015A08 C
XA/B, ZF/G	71	Screw – 5/16" – 18 – brace to support – O.N.R.	2	55605 S2
– – 015A08 – – SUPPORT ASSY. & BRACKET – BRAKE PEDAL (REFER 01508)				
– – 015A26 – – BRACE – BRAKE PEDAL SUPPORT				
XA/B, ZF/G	All		1	XA 54 015A26 A
– – 01601 – – ENGINE COMPARTMENT				
XA, ZF	All	6 cyl. – without air con.	1	XA 54 01601 A
XA, ZF	All	6 cyl. – with air con. and all 8 cyl.	1	XA 54 01601 B
XB, ZG	All	6 cyl.	1	74DA 54 01601 SA
XB, ZG	All	8 cyl.	1	74DA 54 01601 TA
– – 01610 – – PANEL ASSY. – DASH				
XA, ZF	All		1	XA 54 01610 A
XB, ZG	All	To 12/74	1	XB 54 01610 A
XB	All	From 12/74	1	XB 54 01610 AD*
ZG	All	From 12/74	1	PL 54 01610 AF*
XA/B, ZF/G	All	Grommet – use in 01610	2	354243 S

MODEL	BODY TYPE	REMARKS	UNIT	PART NUMBER
-- 01670 -- PAD ASSY. -- DASH SOUND ABSORBERS (REFER ALSO 01674)				
XA	All		1	XA 54 01670 AA
XB	All		1	XB 54 01670 B
ZF	All		1	ZF 54 01670 A
ZG	All		1	ZG 54 01670 B
-- 016B72 -- RETAINER -- STEERING COLUMN OPENING COVER PLATE				
XA/B, ZF/G	All		1	XA 54 016B72 A
XA/B, ZF/G	All	Washer -- retainer & plate to dash panel -- not serviced	2	357789 S7
-- 01674 -- PAD ASSY. -- DASH SOUND ABSORBER (REFER ALSO 01670)				
XB, ZG	All	351 c.i.d. -- to 11/74	1	PL 54 01674 A
XB, ZG	All	351 c.i.d. -- from 11/74	2	XB 54 01674 A*
-- 01698 -- PLATE -- STEERING COLUMN OPENING COVER				
XA/B, ZF/G	All		1	XA 54 01698 A
-- 01699 -- INSULATION -- COWL PANEL LOWER				
ZF/G	All	L.H.	1	ZF 54 01699 A
-- 01799 -- COVER -- DASH PANEL HYDRAULIC CLUTCH MASTER CYLINDER HOLE				
XA/B, ZF/G	All	Auto. trans.	1	XW 54 01799 A
-- 018B24 -- SEAL -- AIR VENT INLET DUCT COWL TOP				
XA/B, ZF/G	All	W/AC	1	XA 54 018B24 A
-- 01861 -- SPACER -- AIR VENT CONTROL				
XA/B, ZF/G	All		2	XA 54 01861 A
-- 01861 -- SPACER -- CHOKE CONTROL				
XA/B, ZF/G	All	6 cyl. 1V	1	XA 54 01861 A
-- 01862 -- DAMPER ASSY. -- VENTILATOR AIR VALVE				
XA/B, ZF/G	All	O.N.R.	1	XA 54 01862 AA
XA/B, ZF/G	All	With AC	1	XA 54 01862 AB
-- 01890/1 -- CONTROL ASSY. -- AIR				
XA/B, ZF/G	All	R.H. -- to 7/74	1	XA 54 01890 A
XB, ZG	All	R.H. -- from 7/74	1	XB 54 01890 A
XA/B, ZF/G	All	L.H. -- exc. taxi -- to 7/74	1	XA 54 01891 A
XB, ZG	All	L.H. -- exc. taxi -- from 7/74	1	XB 54 01891 A
XA/B, ZF/G	All	L.H. -- taxi	1	XA 54 01891 B
XA/B, ZF/G	All	Clip -- 3/16" dia. cable -- control assy. to duct	a/r	112784 ES2
XA/B, ZF/G	All	Nut -- 7/16" -- 20 -- control assy. to cluster hsg.	3	373897 S8
-- 01934/5 -- DUCT ASSY. -- VENT AIR OUTLET				
XA/B, ZF/G	All	R.H.	1	XA 54 01934 B
XA/B, ZF/G	All	L.H.	1	XA 54 01935 B
XA/B, ZF/G	All	L.H. -- W/AC	1	XA 54 01935 C
XA/B, ZF/G	All	L.H. -- export only	1	XA 54 01935 D
XA/B, ZF/G	54A,B,C,E,G	Taxi only	1	XA 54 01935 A
-- 019A75 -- COVER -- VENT AIR OUTLET DUCT L.H. INST. PANEL				
XA/B, ZF/G	All	W/o air conditioning	1	XA 54 019A75 AC
-- 01999 -- GASKET -- VENTILATOR AIR INLET TO COWL TOP				
XA/B, ZF/G	All	Exc. with h/d heater	1	XA 54 01999 B
XA/B, ZF/G	All	With h/d heater	1	XA 54 01999 A
-- 020B04 -- COVER -- PANEL COWL TOP				
XA/B, ZF/G	All		1	XA 54 020B04 A
-- 02010 -- PANEL ASSY. -- COWL TOP				
XA/B, ZF/G	All		1	XA 54 02010 A
-- 020A12 -- BRACKET ASSY. -- PANEL COWL TOP TO STEERING COLUMN				
XA/B, ZF/G	All		1	XA 54 020A12 A
-- 02042/3 -- PILLAR & COWL SIDE ASSY. -- FRONT BODY				
XA/B, ZF/G	All	R.H.	1	XA 54 02042 AD
XA/B, ZF/G	All	L.H.	1	XA 54 02043 AC

MODEL	BODY TYPE	REMARKS	UNIT	PART NUMBER
– – 020B43 – – INSULATION COWL PANEL UPPER				
XB, ZF/G	All	L.H.	1	ZF 54 020B43 A
– – 021A10/1 – – PLATE – COWL SIDE BRACKET ANCHOR				
XA/B, ZF/G	All	6 cyl. – R.H. – from 1/73	1	XA 54 021A10 A
XA/B, ZF/G	All	6 cyl. – L.H. – from 1/73	1	XA 54 021A11 A
– – 021A14/5 – – GUSSET – DASH PANEL TO FLOOR SIDEMEMBER				
XA, ZF	All	R.H. – to 12/72	1	ARC6DB 54 021A14 A
XA, ZF	All	L.H. – to 12/72	1	ARC6DB 54 021A15 A
XA/B, ZF/G	All	R.H. – from 12/72	1	XA 54 021A14 A
XA/B, ZF/G	All	L.H. – from 12/72	1	XA 54 021A15 A
– – 02228 – – GRILLE – COWL TOP VENT				
XA/B, ZF/G	All	To 2/74	1	XA 54 02228 A
XB, ZG	All	From 2/74	1	XB 54 02228 A
– – 02294/5 – – BRACKET – COWL TOP PANEL TO FRONT FENDER APRON				
XA/B, ZF/G	All	R.H.	1	XA 54 02294 B
XA/B, ZF/G	All	L.H.	1	XA 54 02295 B
– – 02344/5 – – REFER SOFT TRIM SECTION				
– – 02500/1 – – PILLAR ASSY. – FRONT BODY LOWER				
XA/B, ZF/G	All	R.H.	1	XA 54 02500 A
XA/B, ZF/G	All	L.H.	1	XA 54 02501 A
– – 02504/5 – – PILLAR ASSY. – FRONT BODY UPPER				
XA/B	65	R.H.	1	XA 65 02504 A
XA/B, ZF/G	54, 71	R.H.	1	XA 54 02504 B
XA	66, 78	R.H.	1	XA 66 02504 A
XB	66, 78	R.H.	1	XA 66 02504 B
XA, ZF	54, 71	L.H.	1	XA 54 02505 A
XB, ZG	54, 71	L.H.	1	XA 54 02505 B
XA/B	65	L.H.	1	XA 65 02505 A
XA	66, 78	L.H.	1	XA 66 02505 A
XB	66, 78	L.H.	1	XA 66 02505 B
– – 02516/7 – – PILLAR – FRONT BODY UPPER OUTER				
XA/B	65	R.H.	1	XA 65 02516 A
XA/B	65	L.H.	1	XA 65 02517 A
– – 02524/5 – – REINFORCEMENT – BODY FRONT PILLAR UPPER				
XA/B	66	R.H.	1	XA 66 02524 A
XA/B	66	L.H.	1	XA 66 02525 A
– – 02526/7 – – REINFORCEMENT – BODY FRONT PILLAR				
XA/B	66	R.H.	1	XA 66 02526 A
XA/B	66	L.H.	1	XA 66 02527 A
– – 025A36/7 – – GUSSET – FRONT BODY UPPER OUTER PILLAR				
XA/B	66	R.H.	1	XA 66 025A36 A
XA/B	66	L.H.	1	XA 66 025A37 A
– – 02562/3 – – EXTENSION – FRONT BODY UPPER OUTER PILLAR				
XA/B, ZF/G	54, 66, 71, 78	R.H.	1	XA 54 02562 A
XA/B	65	R.H.	1	XA 65 02562 A
XA/B, ZF/G	54, 66, 71, 78	L.H.	1	XA 54 02563 A
XA/B	65	L.H.	1	XA 65 02563 A
– – 02606 – – WINDLACE – DOOR OPENING (REFER ALSO SOFT TRIM SECTION)				
XA/B	65	Spacer	6	XA 65 02606 CA
XA/B	66, 78	Spacer	4	XA 65 02606 CA
– – 026A20/1 – – MOULDING – FRONT BODY PILLAR DRIP				
XA/B, ZF/G	54, 71	R.H.	1	XA 54 026A20 A
XA/B	65	R.H.	1	XA 65 026A20 A
XA/B	66, 78	R.H.	1	XA 66 026A20 A
XA/B, ZF/G	54, 71	L.H.	1	XA 54 026A21 A
XA/B	65	L.H.	1	XA 65 026A21 A
XA/B	66, 78	L.H.	1	XA 66 026A21 A

MODEL	BODY TYPE	REMARKS	UNIT	PART NUMBER
— — 02622/3 — — PILLAR — FRONT BODY UPPER INNER CORNER				
XA, ZF	54, 66, 71, 78	R.H.	1	XA 54 02622 A
XA/B	65	R.H.	1	XA 65 02622 A
XB, ZG	54, 66, 71, 78	R.H.	1	XA 54 02622 B
XA, ZF	54, 66, 71, 78	L.H.	1	XA 54 02623 A
XA/B	65	L.H.	1	XA 65 02623 A
XB, ZG	54, 66, 71, 78	L.H.	1	XA 54 02623 B
— — 02805 — — SEAL — COWL TOP PANEL TO HOOD				
XA/B, ZF/G	All		1	XA 54 02805 A
— — 02884/5 — — REINFORCEMENT ASSY. — COWL SIDE PANEL				
ZG	54	R.H.	1	PL 54 02884 A
ZG	54	L.H.	1	PL 54 02885 A

MODEL	BODY TYPE	REMARKS	UNIT	PART NUMBER
-- 030A12/5 -- SPACER -- WINDSHIELD GLASS LOWER				
XA,ZF	All		2	XT 54 030A15 A
XB,ZG	All		2	XA 54 030A12 A*
XB,ZG	All	Screw -- round head -- washer 8 -- 18 x .36 -- attach spacer to panel	4	42119 S2*
-- 03100 -- GLASS ASSY. -- WINDSHIELD				
XA/B, ZF/G	54, 66, 71, 78	Armour plate -- clear	1	XA 54 03100 A
XB,ZG	54, 66, 71, 78	Laminated -- clear	1	XB 54 03100 AA*
XA/B, ZF/G	54, 66, 71, 78	Laminated -- tinted-- banded	1	XA 54 03100 B
XA/B	65	Armour plate -- clear	1	XA 65 03100 A
XA/B	65	Laminated -- tinted -- banded	1	XA 65 03100 B
XA/B, ZF/G	54, 66, 71, 78	Thailand	1	XA 54 03100 E
XA/B, ZF/G	All	Kit -- windshield sealant -- silicone (cold)	1	ARC6DZ 19562 A
XA/B, ZF/G	All	Kit -- windshield sealant -- thermo -- electric type	1	R6 191
-- 03134/5 -- MOULDING -- WINDSHIELD OUTSIDE TOP CORNER				
XA/B, ZF/G	All	R.H.	1	XA 54 03134 A
XA/B,ZF/G	All	L.H.	1	XA 54 03135 A
-- 031A36/7 -- MOULDING ASSY. -- WINDSHIELD OUTSIDE SIDE				
XA/B, ZF/G	54, 66, 71, 78	R.H.	1	XA 54 031A36 A
XA/B, ZF/G	65	R.H.	1	XA 65 031A36 A
XA/B, ZF/G	54, 66, 71, 78	L.H.	1	XA 54 031A37 A
XA/B	65	L.H.	1	XA 65 031A37 A
XA	54B, 66	Screw -- No. 8 -- 18 x .38 -- att. 031A36/7 to roof	a/r	379560 S
-- 03144 -- MOULDING -- WINDSHIELD OUTSIDE TOP				
XA/B, ZF/G	54, 66, 71, 78		1	XA 54 03144 A
XA/B	65		1	XA 65 03144 A
XA	54B, 66	Screw -- No. 8 -- 18 x .38 -- att. 03144 to roof	a/r	379560 S
-- 03148/9 -- MOULDING -- WINDSHIELD OUTSIDE BELT				
XA/B, ZF/G	All	R.H.	1	XA 54 03148 A
XA/B, ZF/G	All	L.H.	1	XA 54 03149 A
-- 03150 -- SPACER -- W/SHIELD OUTSIDE BELT MLDG.				
XA/B, ZF/G	All		8	C60B 62 03150 D
-- 03407 -- RETAINER -- BELT MOULDING WINDSHIELD				
XA/B, ZF/G	All		2	XA 54 03407 A
XA/B, ZF/G	All		7	XA 54 03407 B
-- 03408 -- PANEL ASSY. -- WINDSHIELD HEADER OUTER				
XA/B, ZF/G	54, 66, 71, 78	To 11/73	1	XA 54 03408 B
XB,ZG	54, 71	From 11/73	1	XA 54 03408 B
XB	66, 78	From 11/73	1	XA 66 03408 A
XA/B	65		1	XA 65 03408 A
-- 03542 -- REFER SOFT TRIM SECTION				
-- 04104 -- REFER SOFT TRIM SECTION				
-- 04115 -- INSULATOR -- SUN VISOR ANTI RATTLE				
XA/B, ZF/G	All		2	C5AZ 62 04115 A
-- 04124 -- BUSH -- SUN VISOR RETAINING INNER				
XA/B, ZF/G	All		2	XA 54 04124 A
-- 04132 -- CLIP -- VISOR ARM				
XA,ZF	All	To 5/73	1	XA 54 04132 A
XA/B, ZF/G	All	From 5/73	1	XA 54 04132 P
XB,ZG	All	Parchment -- taxi only	1	XA 54 04132 AB2E
-- 04144 -- ARM & BRACKET ASSY. -- VISOR INSIDE				
XA/B, ZF/G	All		2	XA 54 04144 A
-- 04272 -- RETAINER -- GLOVE BOX DOOR COVER				
XA/B, ZF/G	54D,G,H, 65D,H, 71D		1	XA 54 04272 A
-- 04278 -- CLIP -- INSTRUMENT PANEL PAD RETAINING				
XA/B, ZF/G	All		6	XA 54 04278 A
XA/B, ZF/G	All		4	XA 54 04278 B

MODEL	BODY TYPE	REMARKS	UNIT	PART NUMBER
– – 04282 – – REFER SOFT TRIM SECTION				
– – 042B85 – – REFER SOFT TRIM SECTION				
– – 04291 – – REFER SOFT TRIM SECTION				
– – 043A18 – – REINFORCEMENT – UPPER INSTRUMENT PANEL BEZEL				
XA/B	All		1	XA 54 043A18 A
ZF/G	All		1	ZF 54 043A18 A
ZF/G	All	Screw – No. 8 – 18 x ½" – reinforcement to bezel – O.N.R.	2	52726 S40
– – 04320 – – PANEL ASSY. – INSTRUMENT				
XA/B, ZF/G	All	W/o A/C	1	XA 54 04320 B
XA/B, ZF/G	All	W A/C	1	XA 54 04320 C
XA/B, ZF/G	All	Nut – ¼" – 20 plain – panel assy. to brace	a/r	114323 ES8
– – 043A27 – – BRACE – INSTRUMENT PANEL TO COWL CENTRE				
XA/B, ZF/G	All		1	XA 54 043A27 B
– – 043A63 – – BRACKET – TAXI METER MOUNTING MINI ARGO				
XA/B, ZF/G	All		1	XA 54 043A63 C
– – 043B63/4 – – BRACKET ASSY. – TAXI METER MOUNTING				
XA/B, ZF/G	All	R.H.	1	XA 54 043B63 A
XA/B, ZF/G	All	L.H.	1	XA 54 043B64 B
– – 04366 – – BRACKET – INSTRUMENT PANEL TO COWL SIDE				
XA,ZF	All	To 8/72	2	XA 54 04366 A
XA/B, ZF/G	All	From 8/72	2	XA 54 04366 AB
– – 04367 – – BRACKET – INSTRUMENT PANEL TO COWL SIDE – L.H.				
XA/B, ZF/G	All		1	XA 54 04367 A
– – 043A69 – – SHROUD – TAXI METER				
XA/B	All		1	XA 54 043A69 A
ZF/G	All		1	XA 54 043A69 B
– – 04371 – – COVER – INSTRUMENT PANEL RADIO OPENING				
XA/B	All	W/o radio	1	XA 54 04371 A
ZF/G	All	W/o radio & with taxi meter	1	XA 54 04371 A
XA/B, ZF/G	All	W/radio/stereo	1	XA 54 04371 B
XA/B, ZF/G	All	W/push button radio	1	XA 54 04371 C
XA/B	All	W/manual radio	1	XA 54 04371 D
XB,ZG	All	With radio or radio/stereo	1	XB 54 04371 A
– – 04420/1 – – BRACKET – INSTRUMENT CLUSTER MOUNTING				
XA/B	All	R.H.	1	XA 54 04420 A
XA/B	All	L.H.	1	XA 54 04421 A
– – 044F44 – – PLATE – CONSOLE INSERT				
XA/B, ZF/G	All	Woodgrain – auto trans.	1	XA 54 044F44 AB
XA/B, ZF/G	All	Woodgrain – manual trans.	1	XA 54 044F44 BB
– – 04460 – – TRANSFER – GLOVE BOX DOOR				
XA	65B	"Superbird"	1	XA 65 04460 A
– – 04480 – – REFER SOFT TRIM SECTION				
– – 044B86 – – REFER SOFT TRIM SECTION				
– – 04496 – – COVER – INSTRUMENT PANEL HEATER CONTROL OPENING				
XA/B, ZF/G	All		1	XA 54 04496 A
– – 045A05 – – REFER SOFT TRIM SECTION				
– – 045A06 – – REFER SOFT TRIM SECTION				
– – 045A07 – – PANEL – ARMREST CONSOLE				
XA/B, ZF/G	All		1	XA 54 045A07 A
XA/B, ZF/G	All	Argentina only	1	ZA 54 045A07 B06

MODEL	BODY TYPE	REMARKS	UNIT	PART NUMBER
— — 045A10 — — REFER SOFT TRIM SECTION				
— — 045A08/9 — — SUPPORT — ARMREST CONSOLE				
XA/B, ZF/G	All	R.H.	1	XA 54 045A08 B
XA/B, ZF/G	All	L.H.	1	XA 54 045A09 B
— — 045A10 — — REFER SOFT TRIM SECTION				
— — 045A11 — — BOARD — ARMREST CONSOLE				
XA,ZF	All	To 12/72	1	XA 54 045A11 A
XA/B, ZF/G	All	From 12/72	1	XA 54 045A11 B
— — 045A14 — — PAD — CONSOLE				
XA/B, ZF/G	All		1	XA 54 045A14 A
— — 045A15 — — PIVOT — ARMREST HINGE CONSOLE				
XA/B, ZF/G	All		1	XA 54 045A15 A
— — 045A16/7 — — REFER SOFT TRIM SECTION				
— — 045A21 — — PAD ASSY. — ARMREST CONSOLE				
XA/B, ZF/G	All		1	XA 54 045A21 A
— — 045A22 — — REFER SOFT TRIM SECTION				
— — 045A23 — — REFER SOFT TRIM SECTION				
— — 045A24 — — SUPPORT — CONSOLE REAR				
XA/B, ZF/G	All		1	XA 54 045A24 A
— — 045A26 — — REFER SOFT TRIM SECTION				
— — 045A28 — — MOULDING — CONSOLE PANEL UPPER				
XA/B, ZF/G	All		1	XA 54 045A28 A
— — 045D30 — — REINFORCEMENT — INST. PANEL CLUSTER OPENING				
XB,ZG	All		1	XB 54 045D30 A
— — 045B34 — — BRACKET — CONSOLE ARMREST				
XA/B	All		2	XA 54 045B34 A
— — 045E48/9 — — RETAINER — CONSOLE ARM REST				
XA,ZF	All	R.H. — from 11/72 to 5/73	1	XA 54 045E48 A
XA/B, ZF/G	All	R.H. — from 5/73	1	XA 54 045E48 B
XA,ZF	All	L.H. — from 11/72 to 5/73	1	XA 54 045E49 A
XA/B, ZF/G	All	L.H. — from 5/73	1	XA 54 045E49 B
— — 045A65 — — PIN — HINGE — CONSOLE DOOR				
XA/B, ZF/G	All		1	XA 54 045A65 A
— — 04569 — — PANEL — REAR END CONSOLE				
XA/B, ZF/G	All		1	XA 54 04569 A
— — 04810 — — RECEPTACLE ASSY. — ASH INSTRUMENT PANEL (REFER ALSO 04822)				
XA,ZF	All	Exc. rally pack	1	XA 54 04810 AF
XA	All	Rally pack	1	ZF 54 04810 AE
XB,ZG	All	To 7/74	1	XB 54 04810 B
XB,ZG	All	From 7/74	1	XB 54 04810 D*
XA/B, ZF/G	All	Screw — No. 8 x 15 x 3/8" — receptacle to bezel	4	358735 S2
— — 04822 — — RECEPTACLE — INSTRUMENT PANEL ASH (LESS RETAINER) (REFER ALSO 04810)				
XA	All		1	XA 54 04822 A*
— — 04826 — — RETAINER ASSY. — INSTRUMENT PANEL ASH RECEPTACLE				
XA,ZF	All		1	XA 54 04826 A
XB,ZG	All	To 5/74	1	XB 54 04826 A
XB,ZG	All	From 5/74	1	XB 54 04826 B*
— — 048A42 — — REFER SOFT TRIM SECTION				
— — 060A08 — — CABLE — GLOVE BOX DOOR CHECK				
XA/B, ZF/G	All		1	XA 54 060A08 A

MODEL	BODY TYPE	REMARKS	UNIT	PART NUMBER
— — 06010 — — COMPARTMENT ASSY. — GLOVE				
XA/B, ZF/G	All	W/o A/C	1	XA 54 06010 A
XA/B, ZF/G	All	W A/C	1	XA 54 06010 C
— — 060A12 — — BEZEL — GLOVE COMPARTMENT DOOR LOCK				
XA/B, ZF/G	All		1	C60B 62 060A12 A
— — 060A15 — — BRAKE ASSY. — GLOVE COMPARTMENT LOCK STRIKER TO COWL				
XA/B, ZF/G	All		1	XA 54 060A15 A
— — 06024 — — DOOR ASSY. — GLOVE COMPARTMENT				
XA/B, ZF/G	All		1	XA 54 06024 A
XA/B, ZF/G	All	Bumper — rubber — use between panel assy. & door assy. — glove compt.	2	357811 S
XA/B, ZF/G	All	Screw, door retaining	5	358735 S2
— — 06064 — — CATCH — GLOVE COMPARTMENT DOOR LOCK				
XA/B, ZF/G	All		1	C9AZ 62 06064 A
XA/B, ZF/G	All	Console compartment door	1	3014E 73 06064 A
— — 060A68 — — PAD — GLOVE COMP. DOOR TRIM				
XA/B, ZF/G	54D,G,H, 65D,H, 71D		1	XA 54 060A68 A
— — 060A70 — — REFER SOFT TRIM SECTION				
— — 06081 — — LOCK SET — GLOVE COMPARTMENT				
XA/B, ZF/G	All		1	D10Z 66 06081 A
— — 06115 — — BUMPER — GLOVE COMPARTMENT DOOR ARM				
XA/B, ZF/G	All		1	XT 54 06115 A
— — 06120 — — RETAINER ASSY. — CONSOLE COMPARTMENT DOOR CATCH				
XA/B, ZF/G	All		1	AR113E 73 06120 A
— — 06126 — — REFER SOFT TRIM SECTION				

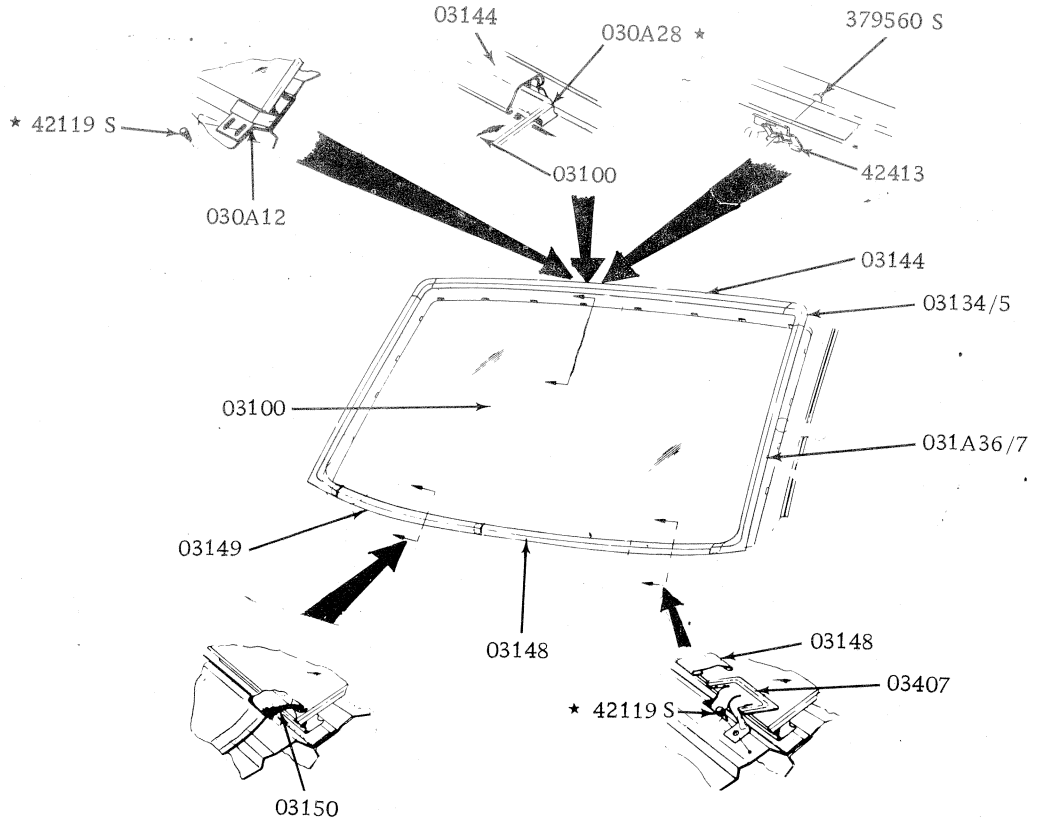

WINDSHIELD & RELATED PARTS

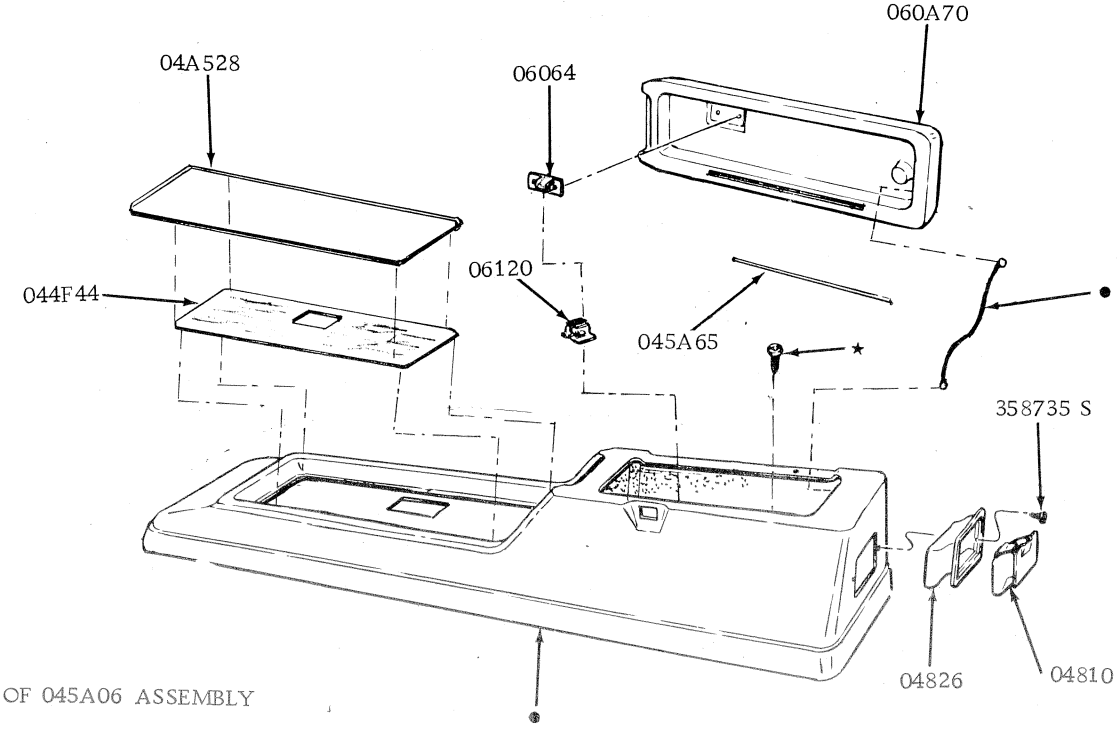

● PART OF 045A06 ASSEMBLY

CONSOLE – WITH BUCKET SEATS AND FLOOR SHIFT

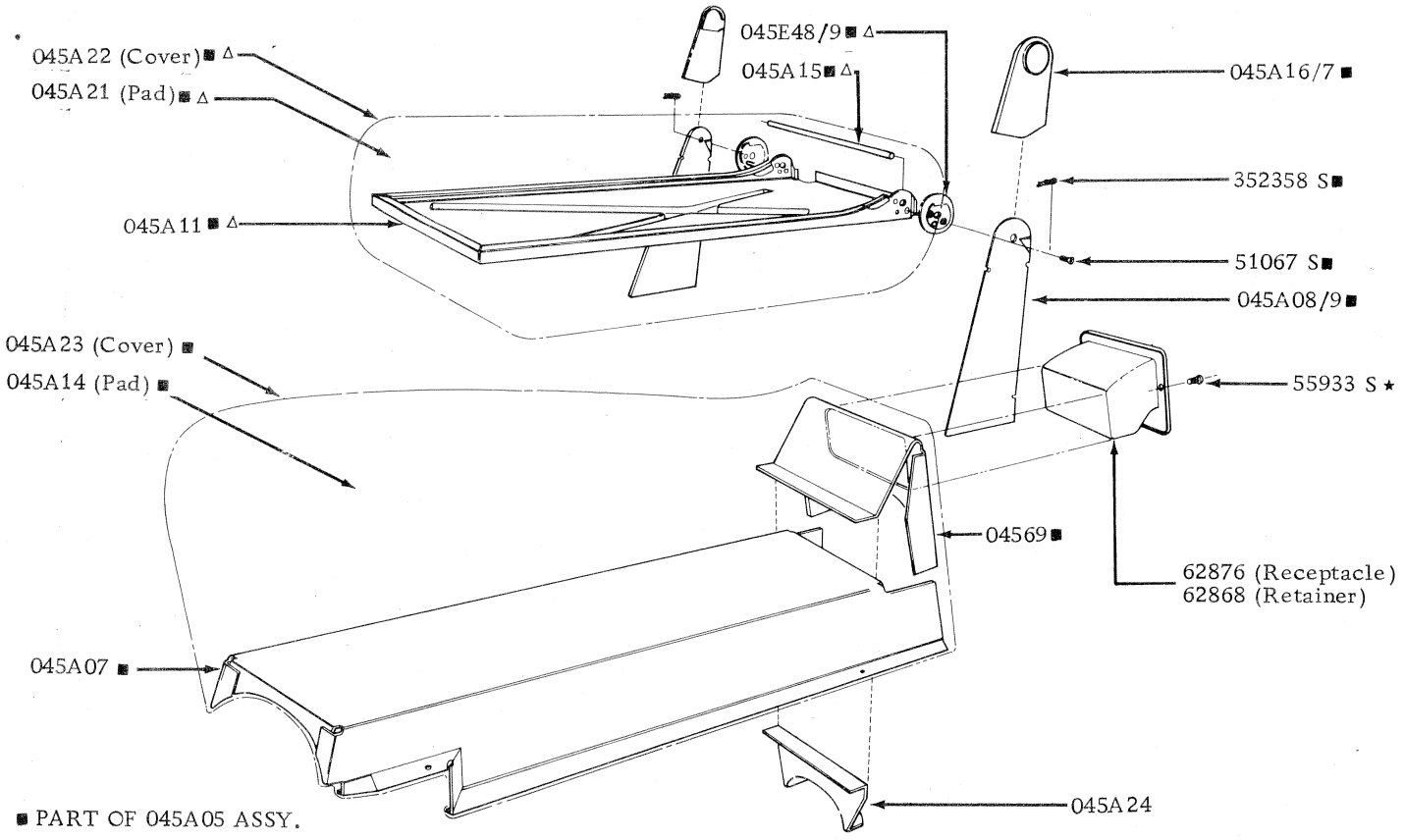

■ PART OF 045A05 ASSY.

△ PART OF 045A10 ASSY.

CONSOLE – WITH BUCKET SEATS AND COLUMN SHIFT

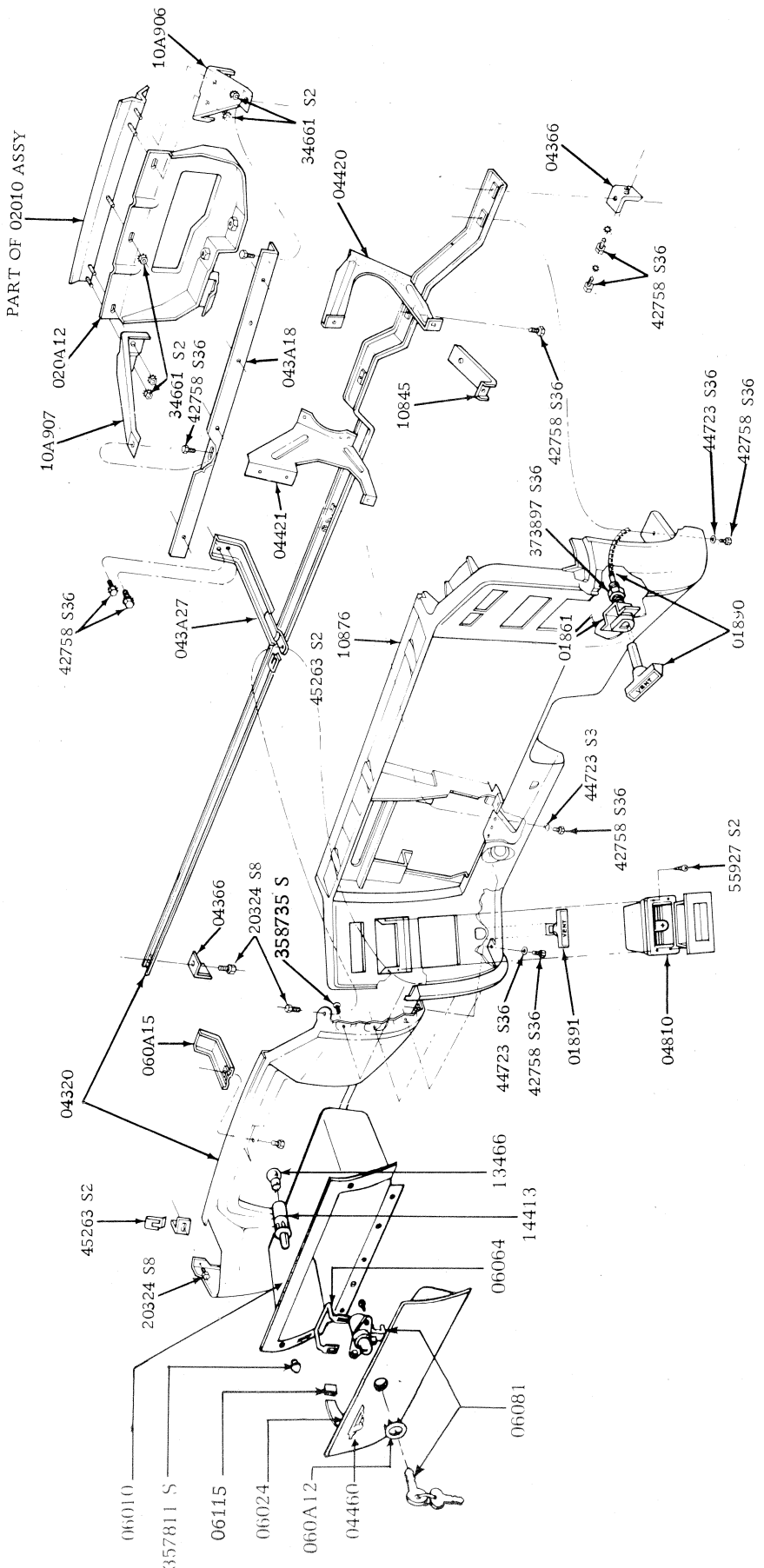

INSTRUMENT PANEL & RELATED PARTS

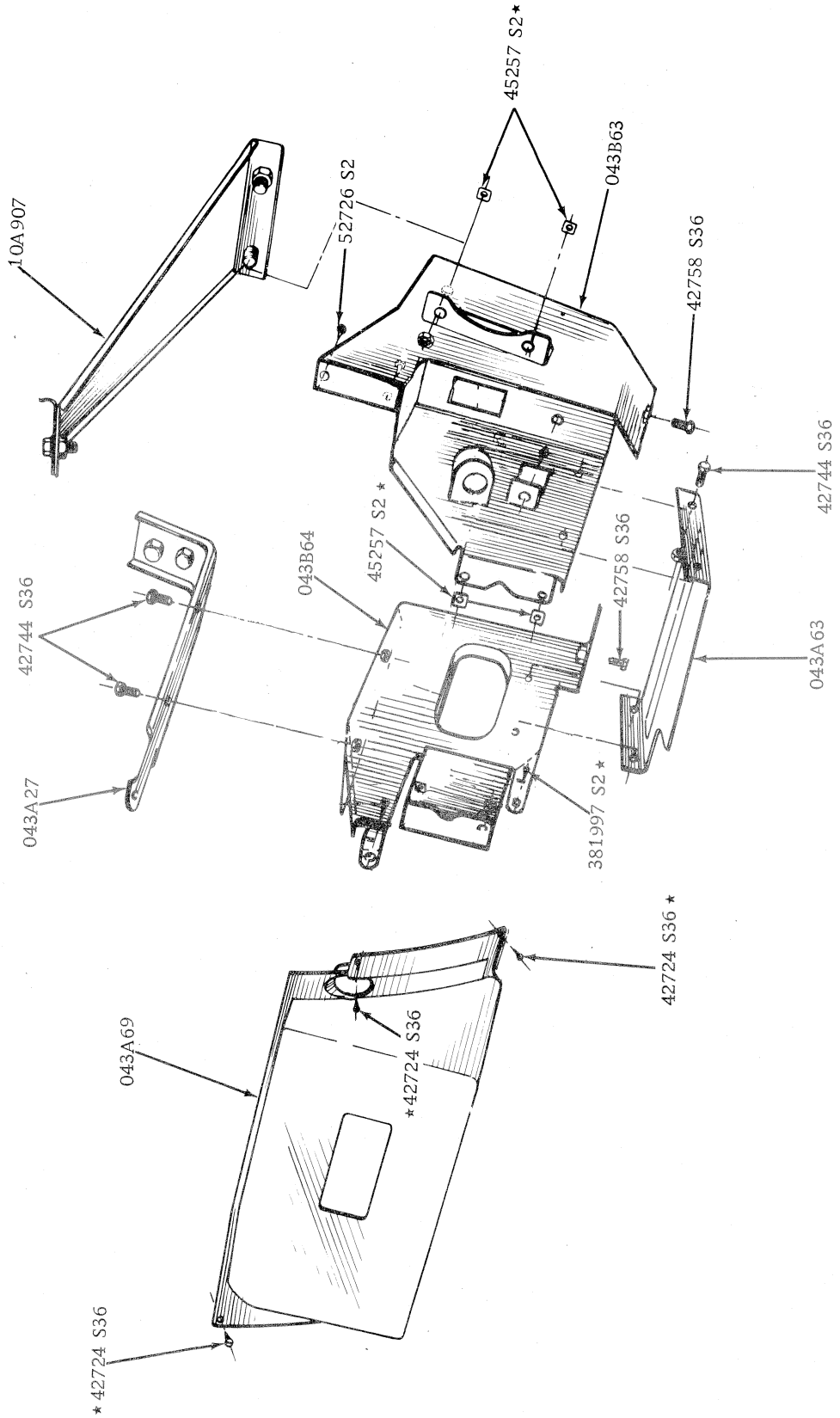

TAXIMETER INSTRUMENT PANEL MOUNTING

MODEL	BODY TYPE	REMARKS	UNIT	PART NUMBER			
– – 10010 – – MEMBER ASSY. – FRONT SUSPENSION NO. 2 CROSS							
XA/B, ZF/G	All	6 cyl. – except air cond.	1	XA	54	10010	A
XA/B, ZF/G	All	8 cyl. & 6 cyl. with air cond.	1	XA	54	10010	B
– – 10048 – – GUSSET – FLOOR SIDEMEMBER TO FRONT SIDEMEMBER REINF.							
XA/B, ZF/G	All	6 cyl. – from 12/72	2	XA	54	10048	A
– – 10066/7 – – EXTENSION – FLOORSIDE INNER MEMBER FRONT							
XA/B, ZF/G	All	R.H.	1	XA	54	10066	A
XA/B, ZF/G	All	L.H.	1	XA	54	10067	A
– – 10104/5 – – REINFORCEMENT – FRONT SUSPENSION NO. 2 CROSSMEMBER OUTER REAR							
XA/B, ZF/G	All	R.H.	1	C60Z	62	10104	A
XA/B, ZF/G	All	L.H.	1	C60Z	62	10105	A
– – 101A04/5 – – REINFORCEMENT & EXT. ASSY. – FRONT SUSPENSION NO. 2 CROSSMEMBER							
XA/B, ZF/G	All	R.H.	1	XA	54	101A04	A
XA/B, ZF/G	All	L.H.	1	XA	54	101A05	A
– – 10116/7 – – MEMBER – FLOOR SIDE INNER							
XA/B	54	R.H.	1	XA	54	10116	A
XA/B, ZF/G	71, 54E,G	R.H.	1	ZF	54	10116	A
XA/B	65	R.H.	1	XA	65	10116	A
XA/B	66, 78	R.H.	1	XA	66	10116	A
XA/B, ZF/G	54, 71	L.H.	1	ZF	54	10117	A
XA/B	65	L.H.	1	XA	65	10117	A
XA/B	66, 78	L.H.	1	XA	66	10117	A
– – 10120/1 – – MEMBER – FLOOR SIDE OUTER							
XA/B	54	R.H.	1	XA	54	10120	A
XA/B	65	R.H.	1	XA	65	10120	A
XA/B, ZF/G	54E,G, 66, 71, 78	R.H.	1	ZF	54	10120	A
XA/B	54	L.H.	1	XA	54	10121	A
XA/B	65	L.H.	1	XA	65	10121	A
XA/B, ZF/G	54E,G, 66, 71, 78	L.H.	1	ZF	54	10121	A
– – 101A22/3 – – EXTENSION ASSY. – FRONT SIDEMEMBER OUTER							
XA/B, ZF/G	All	R.H.	1	XA	54	101A22	A
XA/B, ZF/G	All	L.H.	1	XA	54	101A23	A
– – 10124/5 – – MEMBER ASSY. – FLOOR SIDE REAR							
XA/B	54A,B,C,D, 65B,D	R.H.	1	XA	54	10124	A
XA/B	54H, 65H	R.H. – also all 351 with spt./suspn.	1	XA	54	10124	B
ZF/G	All	R.H.	1	ZF	54	10124	A
XA/B	66, 78	R.H.	1	XA	66	10124	A
XA/B	71	R.H. – W/o aux. rear seats	1	XA	71	10124	A
XB	71	R.H. – with aux. rear seats	1	XB	71	10124	A
XA/B	54A,B,C,D, 65B,D	L.H. – with single exhaust	1	XA	54	10125	B
XA/B	54A,B,C,D, 65B,D	L.H. – with dual exhaust – to 12/74	1	XA	54	10125	B
XB	54A,B,C,D, 65B,D	L.H. – with dual exhaust – from 12/74	1	XB	54	10125	B*
XA/B	54H, 65H	L.H. – also all 351 with spt./suspn. – to 12/74	1	XA	54	10125	C
XB	54H, 65H	L.H. – also all 351 with spt./suspn. – from 12/74	1	XB	54	10125	D*
ZF/G	All	L.H. – with single exhaust	1	ZF	54	10125	A
ZF/G	All	L.H. – with dual exhaust	1	ZF	54	10125	B
XA/B	66, 78	L.H.	1	XA	66	10125	A
XA/B	71	L.H. – W/o aux. rear seats	1	XA	71	10125	A
XB	71	L.H. – with aux. rear seats	1	XB	71	10125	A
– – 10156/7 – – REINFORCEMENT – FLOOR SIDEMEMBER TO FRONT SIDEMEMBER REAR							
XA/B, ZF/G	All	R.H.	1	XA	54	10156	A
XA/B, ZF/G	All	L.H.	1	XA	54	10157	A
– – 10158/9 – – REINFORCEMENT – REAR FLOOR SIDEMEMBER TO FLOOR SIDE							
XA/B	54, 65	R.H.	1	XA	54	10158	A
XB, ZF/G	54, 66, 71, 78	R.H.	1	ZF	54	10158	A
XA/B	54, 65	L.H.	1	XA	54	10159	A
XB, ZF/G	54, 66, 71, 78	L.H.	1	ZF	54	10159	A
– – 10170/1 – – FILLER – FLOOR SIDE OUTER MEMBER FRONT END							
XA/B, ZF/G	All	R.H.	1	XA	54	10170	A
XA/B, ZF/G	All	L.H.	1	XA	54	10171	A

MODEL	BODY TYPE	REMARKS	UNIT	PART NUMBER
– – 10176/7 – – MOULDING – BODY ROCKER PANEL (REFER 29300 FOR ATTACHING KIT)				
XA	54D, 65D	R.H.	1	XA 54 10176 A
XB	54D, 65D	R.H. & L.H.	2	XB 54 10176 A
XA	71D	R.H.	1	XA 71 10176 A
XB	71D	R.H.	1	XB 71 10176 A
ZF/G	54G	R.H.	1	ZF 54 10176 A
XA	54D, 65D	L.H.	1	XA 54 10177 A
XA	71D	L.H.	1	XA 71 10177 A
XB	71D	L.H.	1	XB 71 10177 A
ZF/G	54G	L.H.	1	ZF 54 10177 A
XA/B	54D, 65D, 71D	Screw – No. 8 – moulding to member	2	53037 S36
XA/B	54D, 65D, 71D	Nut – No. 8 – 32 moulding to fender	4	372531 S100
XA/B, ZF/G	All	Screw – No. 8 – 18 x .38" – moulding to body	a/r	379560 S
– – 10178/9 – – MOULDING – FLOOR SIDEMEMBER REAR END (REFER 29300 FOR ATTACHING KIT)				
ZF/G	54G	R.H.	1	ZF 54 10178 A
ZF/G	54G	L.H.	1	ZF 54 10179 A
ZF/G	54G	Screw – No. 8 – moulding to rocker panel	2	53037 S36
XA/B, ZF/G	All	Screw – No. 8 – 18 x .38" – moulding to body	a/r	379560 S
– – 10182 – – RETAINER – BODY MOULDING				
ZF/G	54G	Moulding (10176/7) to rocker panel	14	ZF 54 10182 A
XB	54D, 65D, 71D	Moulding (10176/7) to rocker panel – centre	14	XB 54 10182 A
XB	54D, 65D, 71D	Moulding (10176/7) to rocker panel – black	a/r	XB 54 10182 AA1A*
XB	54D, 65D, 71D	Moulding (10176/7) to rocker panel – white	a/r	XB 54 10182 AA1H*
XB	54D, 65D, 71D	From 7/74	4	XB 54 10182 D*
XA	54D, 65D, 71D	Moulding (10176/7) to rocker panel	14	XW 54 10182 A
XA	71D	Moulding (432A46) to tailgate	4	XW 54 10182 A
– – 10194/5 – – GUSSET – FLOOR SIDEMEMBER TO FRONT SIDEMEMBER				
XA/B, ZF/G	All	R.H. – 6 cyl. – from 12/72	1	XA 54 10194 A
XA/B, ZF/G	All	L.H. – 6 cyl. – from 12/72	1	XA 54 10195 A
– – 10198 – – RETAINER ASSY. – FRONT SIDEMEMBER MOULDING FRONT				
XA	54D, 65D, 71D	Moulding (10176/7) to fender	2	XW 54 10198 A
ZF	All	Att. 42512 to door	6	ZF 54 10198 A
– – 10250/1 – – REINFORCEMENT – FLOOR SIDE REAR MEMBER				
ZF/G	All	R.H.	1	ARC60B 54 10250 A
ZF/G	All	L.H.	1	ARC60B 54 10251 A
– – 10262/3 – – REINFORCEMENT – FLOOR SIDEMEMBER TO FRONT SIDEMEMBER FRONT				
XA/B, ZF/G	All	R.H.	1	XA 54 10262 A
XA/B, ZF/G	All	L.H.	1	XA 54 10263 A
– – 102A78 – – SPACER – ROCKER PANEL MOULDING				
XA	54D, 65D, 71D		4	XA 54 102A78 A
– – 10326 – – REINFORCEMENT ASSY. – REAR FLOOR SIDEMEMBER, REAR SPRING MOUNTING				
XA/B	54, 65	To 12/74	2	C6DZ 62 10326 A
ZF/G	All		2	ARC60B 54 10326 A
– – 104A50/1 – – SHIELD – BODY ROCKER PANEL FRONT				
XA/B, ZF/G	54, 71		2	XA 54 104A50 A
XA/B	65, 66, 78	R.H.	1	XA 66 104A50 A
XA/B	65, 66, 78	L.H.	1	XA 66 104A51 A
– – 104A52 – – SHIELD – BODY ROCKER PANEL WIRE REAR				
XA/B, ZF/G	54, 71		2	XA 54 104A52 AA
– – 10510 – – SPACER – FLOOR SIDE OUTER MEMBER				
XA, ZF	All	O.N.R.	4	C60Z 62 10510 A
– – 10538 – – REINFORCEMENT – FLOOR SIDE INNER MEMBER				
XA/B, ZF/G	All	From 1/73	2	XA 54 10538 A
– – 10542/3 – – REINFORCEMENT – FRONT SUSPENSION NO. 2 CROSSMEMBER OUTER				
XA/B, ZF/G	All	R.H.	1	C60Z 62 10542 A
XA/B, ZF/G	All	L.H.	1	C60Z 62 10543 A

MODEL	BODY TYPE	REMARKS	UNIT	PART NUMBER
– – 105A62/3 – – EXTENSION ASSY. – FLOOR SIDE INNER MEMBER				
XA, ZF	All	R.H. – from 1/73	1	XA 54 105A62 A
XB, ZG	All	R.H. – except with rear disc brakes	1	XA 54 105A62 A
XA, ZF	All	L.H. – from 1/73	1	XA 54 105A63 A
XB, ZG	All	L.H. – except with rear disc brakes	1	XA 54 105A63 A
XB, ZG	All	With rear disc brakes	1	XB 54 105A62 A
– – 106A14 – – SPACER – FRONT FLOOR CROSS OUTER MEMBER INNER				
XB, ZG	All	O.N.R.	2	ARC6DB 54 106A14 A
– – 106A18/9 – – EXTENSION MEMBER – REAR FLOOR CROSS				
XA/B	71	R.H.	1	XA 71 106A18 A
XA/B	71	L.H.	1	XA 71 106A19 A
– – 106A34/5 – – MEMBER ASSY. – FRONT SIDE OUTER				
XA/B, ZF/G	All	R.H.	1	XA 54 106A34 A
XA/B, ZF/G	All	L.H.	1	XA 54 106A35 A
– – 10692/3 – – MEMBER ASSY. – FRONT FLOOR CROSS OUTER				
XA/B, ZF/G	All	R.H.	1	XA 54 10692 B
XA/B, ZF/G	All	L.H.	1	XA 54 10693 B
– – 10736/7 – – MEMBER – REAR FLOOR CROSS				
XA/B	66, 78	Front	1	XA 66 10736 A
XA/B	66, 78	Intermediate	1	XA 66 10737 A
– – 10746 – – MEMBER ASSY. – REAR FLOOR CROSS				
XA/B	54, 65	Rear	1	XA 54 10746 A
ZF/G	54	Rear	1	ZF 54 10746 A
– – 10780 – – MEMBER – REAR FLOOR CROSS REAR				
XA/B	66, 78		1	XA 66 10780 A
XA/B	71		1	XA 71 10780 A
– – 10922 – – MEMBER – FRONT CROSS				
XA/B, ZF/G	All		1	XA 54 10922 A
– – 111A36 – – BRACKET – PARKING BRAKE SPRING				
XA/B, ZF/G	All		1	XA 54 111A36 A
– – 11137 – – BRACKET – TONNEAU FLOOR CENTRE				
XA/B	66, 78	To 12/74	1	XA 66 11137 A
XB	66, 78	From 12/74	1	XB 66 11137 A*
– – 111A39 – – SUPPORT ASSY. – FUEL TANK CENTRE				
XA/B	66, 78		1	XA 66 111A39 A
– – 11140 – – PAN – FRONT FLOOR				
XA	54, 65		1	XA 54 11140 A
XB	54, 65		1	XB 54 11140 A
XA	66, 78		1	XA 66 11140 A
XB	66, 78		1	XB 66 11140 A
XA	71		1	XA 71 11140 A
XB	71		1	XB 71 11140 A
ZF	All		1	ZF 54 11140 A
ZG	All		1	ZG 54 11140 A
XA/B	78	Plug – button – plug front floor pan holes	4	357042 S
– – 11155 – – PAN ASSY. – CENTRE FLOOR				
XA/B	54, 65	To 12/74	1	XA 54 11155 A
XB	54, 65	From 12/74	1	XB 54 11155 A*
XA/B	71	W/o aux. rear seats	1	XA 71 11155 A
XB	71	With aux. rear seats	1	XB 71 11155 A
ZF/G	All	To 12/74	1	ZF 54 11155 A
ZG	All	From 12/74	1	ZG 54 11155 A*
– – 111A58 – – REINFORCEMENT – FLOOR PAN TO FUEL TANK SUPPORT				
XA/B	66, 78		1	XA 66 111A58 A
– – 111A64 – – REINFORCEMENT – REAR FLOOR PAN				
XA/B, ZF/G	54, 65, 71		2	ARC6DB 54 111A64 A

MODEL	BODY TYPE	REMARKS	UNIT	PART NUMBER			
– – 11215 – – PAN ASSY. - REAR FLOOR							
XA/B	54A,B,C,D, 65B,D	With single exhaust – to 12/74	1	XA	54	11215	AC
XB	54A,B,C,D, 65B,D	With single exhaust – from 12/74	1	XB	54	11215	A*
XA/B	54A,B,C,D, 65B,D	With dual exhaust – to 12/74	1	XA	54	11215	BC
XB	54A,B,C,D, 65B,D	With dual exhaust – from 12/74	1	XB	54	11215	B*
XA	54H, 65H	To 8/72	1	XA	54	11215	C
XA/B	54H, 65H	Also all 351 c.i.d. with spts. suspn. – from 8/72 to 12/74	1	XA	54	11215	CC
XB	54H, 65H	Also all 351 c.i.d. with spts. suspn. – from 12/74	1	XB	54	11215	C*
XA/B	66, 78		1	XA	66	11215	AB
XA/B	71	To 9/74	1	XA	71	11215	AC
XB	71	From 9/74 to 12/74	1	XB	71	11215	B*
XB	71	Without aux. rear seat – from 12/74	1	XB	71	11215	AA*
XB	71	With aux. rear seat – from 12/74	1	XB	71	11215	BA*
ZF/G	All	With single exhaust – to 12/74	1	ZF	54	11215	AC
ZG	All	With single exhaust – from 12/74	1	ZG	54	11215	A*
ZF/G	All	With dual exhaust – to 12/74	1	ZF	54	11215	BC
ZG	All	With dual exhaust – from 12/74	1	ZG	54	11215	B*
– – 11218 – – PAN – REAR FLOOR REAR							
XA/B	66, 78		1	XA	66	11218	A
XA/B	71		1	XA	71	11218	A
ZF/G	All		1	ZF	54	11218	A
– – 112A22/3 – – PAN – REAR FLOOR SIDE INNER							
XA/B	54, 65	R.H.	1	XA	54	112A22	A
ZF/G	All	R.H.	1	ZF	54	112A22	A
XA/B	71	R.H. – W/o aux. rear seats	1	XA	71	112A22	A
XB	71	R.H. – with aux. rear seats	1	XB	71	112A22	A
XA/B	54, 65	L.H. – to 12/74	1	XA	54	112A23	A
XB	54, 65	L.H. – from 12/74	1	XB	54	112A23	AA*
ZF/G	All	L.H. – to 12/74	1	ZF	54	112A23	A
ZG	All	L.H. – from 12/74	1	ZG	54	112A23	A*
XA/B	71	L.H. – W/o aux. rear seat – to 12/74	1	XA	71	112A23	A
XB	71	L.H. – W/o aux. rear seat – from 12/74	1	XB	71	112A23	AA*
XB	71	L.H. – with aux. rear seat – to 12/74	1	XB	71	112A23	B
XB	71	L.H. – with aux. rear seat – from 12/74	1	XB	71	112A23	BA*
– – 11228 – – PANEL – REAR SIDE TONNEAU							
XA/B	54	Filler rear floor to qtr. panel	2	XA	54	11228	A
XA/B	65	Filler rear floor to qtr. panel	2	XA	65	11228	A
ZF/G	All	Filler rear floor to qtr. panel	2	ZF	54	11228	A
– – 112A28 – – FILLER ASSY. – REAR FLOOR SIDE FRONT							
XA	65	O.N.R.	2	XA	65	112A28	A
– – 11230 – – BOARD – TONNEAU FLOOR FRONT							
XA/B	66, 78		1	XA	66	11230	A
– – 11246/7 – – REINFORCEMENT ASSY. – FLOOR PAN SEAT TRACK							
XA/B, ZF/G	All	R.H.	1	XA	54	11246	B
XA/B, ZF/G	All	L.H.	1	XA	54	11247	B
– – 11258 – – DRAIN TUBE							
XA/B	66		2	ARC6DB	66	11258	A
– – 11318 – – PANEL – SILL REAR FLOOR CROSS							
XA/B	66		1	XA	66	11318	A
XA/B	71		1	XA	71	11318	A
XB	78	With liftgate	1	XA	66	11318	A
XA/B	78	With back doors	1	XA	78	11318	A
– – 113A18 – – SILL ASSY. – REAR FLOOR CROSS							
XB	78		1	XB	78	113A18	A*
– – 113C18 – – PANEL – SILL REAR FLOOR CROSS EXT.							
XB	78	With back doors	1	XA	78	113C18	A
– – 113A30 – – REINFORCEMENT ASSY. – FLOOR PAN CENTRE							
XA/B, ZF/G	All	With bucket seats	1	XA	54	113A30	B
– – 11344/5 – – BRACKET – REAR FLOOR PAN TO REAR CROSS MEMBER							
XA/B, ZF/G	54, 65	R.H.	1	XA	54	11344	A
XA/B, ZF/G	54, 65	L.H.	1	XA	54	11345	A

MODEL	BODY TYPE	REMARKS	UNIT	PART NUMBER			
– – 11494 – – ABSORBER – REAR FLOOR PAN – SOUND							
XA/B, ZF/G	All		1	XA	65	11494	A
– – 11580 – – PANEL – REAR FLOOR TRIM							
XA/B	71		1	XA	71	11580	AP
– – 12630 – – MEMBER ASSY. – TONNEAU FLOOR FRONT CROSS							
XA/B	66, 78		1	XA	66	12630	A
– – 13000 – – REFER SOFT TRIM SECTION							
– – 13010 – – REFER SOFT TRIM SECTION							
– – 13015 – – PAD – FRONT FLOOR							
XA/B, ZF/G	All	Column shift	1	XA	54	13015	A
XA/B, ZF/G	All	Floor shift	1	XA	54	13015	B
– – 13054/5 – – REFER SOFT TRIM SECTION							
– – 13056 – – PAD – REAR FLOOR							
XA/B, ZF/G	54, 65, 71		1	XA	54	13056	A
– – 130A56 – – PAD – REAR FLOOR FRONT							
ZF/G	54		1	ZF	54	130A56	A
– – 130B56 – – DEADENER – REAR FLOOR REAR							
ZF/G	54		1	ZF	54	130B56	A
– – 13144/5 – – REFER SOFT TRIM SECTION							
– – 13182 – – REFER SOFT TRIM SECTION							
– – 13190 – – RETAINER – FRONT FLOOR MAT TO SEAT TRACK							
XA/B, ZF/G	All		2	C1DB	64	13190	A
– – 13190 – – PLATE – FRONT FLOOR MAT							
XA/B, ZF/G	All		2	XR	54	13190	A
– – 13208/9 – – PLATE – FRONT DOOR SCUFF							
XA/B, ZF/G	54, 71		2	XA	54	13208	A
XA/B	65		2	XA	65	13208	A
XA/B	66, 78	R.H.	1	XA	66	13208	A
XA/B	66, 78	L.H.	1	XA	66	13209	A
– – 13228 – – PLATE – REAR DOOR SCUFF							
XA/B, ZF/G	54, 71	To 2/74	2	XA	54	13228	A
XB, ZG	54, 71	From 2/74	2	XB	54	13228	A

MODEL	BODY TYPE	REMARKS	UNIT	PART NUMBER

MODEL	BODY TYPE	REMARKS	UNIT	PART NUMBER
– – 200K49 – – GLASS – WINDOW FRONT BODY SIDE FIXED				
XA/B	78		2	XA 78 200K49 A
– – 20124/5 – – DOOR ASSY. – FRONT				
XA	54, 71	R.H.	1	XA 54 20124 A
XA	65, 66, 78	R.H.	1	XA 65 20124 A
XB	65, 66, 78	R.H.	1	XB 65 20124 A
XB	54, 71	R.H.	1	ZF 54 20124 A
ZF/G	54	R.H.	1	ZF 54 20124 A
XA	54, 71	L.H.	1	XA 54 20125 A
XA	65, 66, 78	L.H.	1	XA 65 20125 A
XB	65, 66, 78	L.H.	1	PL 65 20125 A
XB	54, 71	L.H.	1	ZF 54 20125 A
ZF/G	54	L.H.	1	ZF 54 20125 A
– – 20204/5 – – PANEL – FRONT DOOR OUTSIDE				
XA	54, 71	R.H.	1	XA 54 20204 A
XA	65, 66, 78	R.H.	1	XA 65 20204 A
XB	65, 66, 78	R.H.	1	XB 65 20204 A
XB, ZF/G	54, 71	R.H.	1	ZF 54 20204 A
XA	54, 71	L.H.	1	XA 54 20205 A
XA	65, 66, 78	L.H.	1	XA 65 20205 A
XB	65, 66, 78	L.H.	1	PL 65 20205 A
XB, ZF/G	54, 71	L.H.	1	ZF 54 20205 A
– – 20492/3 – – MOULDING – FRONT DOOR OUTSIDE FRONT				
XA/B, ZF/G	54D,E,G,	R.H.	1	XA 54 20492 A
XA/B, ZF/G	54D,E,G	L.H.	1	XA 54 20493 A
XA/B, ZF/G	All	Nut – No. 8 – 32 crown, moulding to body	a/r	V 387725 S7
– – 204A92/3 – – MOULDING – FRONT DOOR OUTSIDE FRONT CAPPING				
XA	54D, 71D	R.H.	1	XA 54 204A92 A
XA	54D, 71D	L.H.	1	XA 54 204A93 A
– – 20530/1 – – WEATHERSTRIP ASSY. – FRONT DOOR				
XA,ZF	54, 71	R.H.	1	XA 54 20530 A
XB,ZG	54, 71	R.H.	1	XB 54 20530 A
XA	65, 66, 78	R.H. – to 6/73	1	XA 65 20530 A
XA	65, 66, 78	R.H. – from 6/73	1	XA 65 20530 B
XB	65	R.H.	1	XB 65 20530 A
XB	66, 78	R.H.	1	XB 66 20530 A
XA,ZF	54, 71	L.H.	1	XA 54 20531 A
XB,ZG	54, 71	L.H.	1	XB 54 20531 A
XA	65, 66, 78	L.H. – to 6/73	1	XA 65 20531 A
XA	65, 66, 78	L.H. – from 6/73	1	XA 65 20531 B
XB	65	L.H.	1	XB 65 20531 A
XB	66, 78	L.H.	1	XB 66 20531 A
XA/B, ZF/G	54, 65	Screw – No. 8 – 18 x 3/8" – weatherstrip to door	4	52720 S8
XA,ZF	54, 65	Clip – weatherstrip to door	2	V 388272 S
– – 20564/5 – – SEAL ASSY. – DOOR BELT				
XA	65, 66, 78	R.H.	1	XA 65 20564 A
XB	65, 66, 78	R.H.	1	XB 65 20564 A
XA	65, 66, 78	L.H.	1	XA 65 20565 A
XB	65, 66, 78	L.H.	1	XB 65 20565 A
XA/B	65, 66, 78	Screw – No. 8 – 18 x 3/8" – seal to door	6	52720 S8
– – 20700 – – SEAL – DOOR DRAIN				
XA/B	71		4	C3AZ 62 20700 B
– – 20780/1 – – MOULDING ASSY. – FRONT DOOR OUTSIDE (REFER 29300 FOR ATTACHING KIT)				
XA/B, ZF/G	54, 71	R.H. – black	1	XA 54 20780 AA1A
XA/B	65, 66, 78	R.H. – black	1	XA 65 20780 AA1A
XA/B, ZF/G	54, 71	L.H. – black	1	XA 54 20781 AA1A
XA/B	65, 66, 78	L.H. – black	1	XA 65 20781 AA1A
– – 20802 – – ORNAMENT – DOOR TRIM				
XA/B	54B,D	New Zealand with vinyl roof & V8 option engine	2	XY 54 20802 B
XA/B	54D,H, 71D		2	XA 54 20802 A
ZF/G	54G		2	XY 54 20802 A

MODEL	BODY TYPE	REMARKS	UNIT	PART NUMBER			
– – 208A08/9 – – STRIPE – FRONT DOOR – RALLY PACK							
XA,ZF	54, 71	R.H. – black	1	XA	54	208A08	A1A
XA,ZF	54, 71	R.H. – gold	1	XA	54	208A08	A1G
XA,ZF	54, 71	R.H. – silver	1	XA	54	208A08	A1L
XA,ZF	54, 71	R.H. – orange	1	XA	54	208A08	A1V
XA	65	R.H. – black	1	XA	65	208A08	A1A
XA	65	R.H. – gold	1	XA	65	208A08	A1G
XA	65	R.H. – silver	1	XA	65	208A08	A1L
XA	65	R.H. – orange	1	XA	65	208A08	A1V
XA	66, 78	R.H. – black	1	XA	66	208A08	A1A
XA	66, 78	R.H. – gold	1	XA	66	208A09	A1G
XA	66, 78	R.H. – silver	1	XA	66	208A08	A1L
XA	66, 78	R.H. – orange	1	XA	66	208A08	A1V
XB	54, 71	R.H. – black	1	XB	54	208A08	AA1A
XB	54, 71	R.H. – gold	1	XB	54	208A08	AA1G
XB	54, 71	R.H. – silver	1	XB	54	208A08	AA1L
XB	54, 71	R.H. – orange	1	XB	54	208A08	AA1V
XB	65, 66, 78	R.H. – black	1	XB	65	208A08	AA1A
XB	65, 66, 78	R.H. – gold	1	XB	65	208A08	AA1G
XB	65, 66, 78	R.H. – silver	1	XB	65	208A08	AA1L
XB	65, 66, 78	R.H. – orange	1	XB	65	208A08	AA1V
XA,ZF	54, 71	L.H. – black	1	XA	54	208A09	A1A
XA,ZF	54, 71	L.H. – gold	1	XA	54	208A09	A1G
XA,ZF	54, 71	L.H. – silver	1	XA	54	208A09	A1L
XA,ZF	54, 71	L.H. – orange	1	XA	54	208A09	A1V
XA	65	L.H. – black	1	XA	65	208A09	A1A
XA	65	L.H. – gold	1	XA	65	208A09	A1G
XA	65	L.H. – silver	1	XA	65	208A09	A1L
XA	65	L.H. – orange	1	XA	65	208A09	A1V
XA	66, 78	L.H. – black	1	XA	66	208A09	A1A
XA	66, 78	L.H. – gold	1	XA	66	208A09	A1G
XA	66, 78	L.H. – silver	1	XA	66	208A09	A1L
XA	66, 78	L.H. – orange	1	XA	66	208A09.	A1V
XB	54, 71	L.H. – black	1	XB	54	208A09	AA1A
XB	54, 71	L.H. – gold	1	XB	54	208A09	AA1G
XB	54, 71	L.H. – silver	1	XB	54	208A09	AA1L
XB	54, 71	L.H. – orange	1	XB	54	208A09	AA1V
XB	65, 66, 78	L.H. – black	1	XB	65	208A09	AA1A
XB	65, 66, 78	L.H. – gold	1	XB	65	208A09	AA1G
XB	65, 66, 78	L.H. – silver	1	XB	65	208A09	AA1L
XB	65, 66, 78	L.H. – orange	1	XB	65	208A09	AA1V
– – 20818 – – RETAINER – DOOR OUTSIDE MOULDING							
XA/B	65D,H		12	XA	65	20818	A
– – 20908 – – RETAINER – MOULDING DOOR OUTSIDE BELT							
XA/B	65D,H	Att. 20492/3	2	XA	65	20908	A
– – 20910 – – MOULDING KIT – DOOR EDGE GUARD (REFER ACCESSORIES SECTION)							
– – 209A10 – – GUARD – FRONT/REAR DOOR EDGE							
XA/B, ZF/G	54, 71	R.H. – front	1	XA	54	209A10	A
XA/B	65	R.H. – front	1	XA	65	209A10	A
XA/B, ZF/G	54, 71	R.H. – rear	1	XA	54	209A10	C
XA/B, ZF/G	54, 71	L.H. – front	1	XA	54	209A10	B
XA/B	65	L.H. – front	1	XA	65	209A10	B
XA/B, ZF/G	54, 71	L.H. – rear	1	XA	54	209A10	D
– – 20934/5 – – MOULDING – DOOR OUTSIDE BELT							
XA/B	65D,H	R.H.	1	XA	65	20934	A
XA/B	65D,H	L.H.	1	XA	65	20935	A
– – 209A34/5 – – MOULDING ASSY. – FRONT DOOR OUTSIDE BELT							
ZF/G	54G	R.H.	1	ZF	54	209A34	A
ZF/G	54G	L.H.	1	ZF	54	209A35	A
– – 21094 – – RETAINER ASSY. – DOOR OUTSIDE MOULDING							
XA/B, ZF/G	All		a/r	ZC	54	21094	A
– – 21140/1 – – MOULDING – FRONT DOOR OUTSIDE REAR							
XA/B, ZF/G	54D,G, 71D	R.H.	1	XA	54	21140	A
XA/B, ZF/G	54D,G, 71D	L.H.	1	XA	54	21141	A

MODEL	BODY TYPE	REMARKS	UNIT	PART NUMBER
– – 21232 – – SPRING – DOOR CHECK ON LOWER HINGE				
XA/B, ZF/G	All		4	XW 54 21232 A
– – 21402/3 – – WINDOW ASSY. – DOOR VENT				
XA/B, ZF/G	54, Exc. 54H, 71	R.H. – clear	1	XA 54 21402 A
XA/B, ZF/G	54, Exc. 54H 71	R.H. – tinted	1	XA 54 21402 C
XA/B	54H	R.H. – clear	1	XA 54 21402 B
XA/B	54H	R.H. – tinted	1	XA 54 21402 D
XA/B, ZF/G	54, Exc. 54H, 71	L.H. – clear	1	XA 54 21403 A
XA/B, ZF/G	54, Exc. 54H 71	L.H. – tinted	1	XA 54 21403 C
XA/B	54H	L.H. – clear	1	XA 54 21403 B
XA/B	54H	L.H. – tinted	1	XA 54 21403 D
– – 21406/7 – – FRAME & GLASS ASSY. – DOOR VENT WINDOW				
XA/B, ZF/G	54, 71	R.H. – clear	1	XA 54 21406 A
XA/B, ZF/G	54, 71	R.H. – tinted	1	XA 54 21406 B
XA/B, ZF/G	54, 71	L.H. – clear	1	XA 54 21407 A
XA/B, ZF/G	54, 71	L.H. – tinted	1	XA 54 21407 B
– – 21408/9 – – RETAINER ASSY. – FRONT DOOR VENT WINDOW WEATHERSTRIP				
XA/B, ZF/G	54, 71	R.H.	1	XA 54 21408 A
XA/B, ZF/G	54, 71	L.H.	1	XA 54 21409 A
XA/B, ZF/G	54, 71	Rivet – 9/64" x .20" – retainer to bar assy.	8	351909 S8
– – 21410/1 – – GLASS – FRONT DOOR WINDOW				
XA/B, ZF/G	54, 71	R.H. – clear with vent window	1	XA 54 21410 A
XA/B, ZF/G	54, 71	R.H. – tinted with vent window	1	XA 54 21410 B
XA/B, ZF/G	54, 71	R.H. – clear ventless windows	1	XA 54 21410 C
XA/B, ZF/G	54, 71	R.H. – tinted – ventless window	1	XA 54 21410 D
XA/B	65	R.H. – clear – to 2/74	1	XA 65 21410 AB
XB	65	R.H. – clear – from 2/74	1	XA 65 21410 AC
XA/B	65	R.H. – tinted – to 2/74	1	XA 65 21410 BB
XB	65	R.H. – tinted – from 2/74	1	XA 65 21410 BC
XA/B	66, 78	R.H.	1	XA 66 21410 A
XA/B, ZF/G	54, 71	L.H. – clear – with vent window	1	XA 54 21411 A
XA/B, ZF/G	54, 71	L.H. – tinted – with vent window	1	XA 54 21411 B
XA/B, ZF/G	54, 71	L.H. – clear – ventless window	1	XA 54 21411 C
XA/B, ZF/G	54, 71	L.H. – tinted – ventless window	1	XA 54 21411 D
XA/B	65	L.H. – clear – to 2/74	1	XA 65 21411 AB
XB	65	L.H. – clear – from 2/74	1	XA 65 21411 AC
XA/B	65	L.H. – tinted – to 2/74	1	XA 65 21411 BB
XB	65	L.H. – tinted – from 2/74	1	XA 65 21411 BC
XA/B	66, 78	L.H.	1	XA 66 21411 A
XA/B	65, 66, 78	Nut – ¼" – 20 – (21410/1) to brkt assy. (23276/7)	6	384289 S36
– – 21412/3 – – GLASS – DOOR VENT WINDOW				
XA/B, ZF/G	54, 71	R.H. – clear	1	XA 54 21412 B
XA/B, ZF/G	54, 71	R.H. – tinted	1	XA 54 21412 BA
XA/B, ZF/G	54, 71	L.H. – clear	1	XA 54 21413 B
XA/B, ZF/G	54, 71	L.H. – tinted	1	XA 54 21413 BA
– – 214A18 – – CLIP – DOOR VENT WINDOW WEATHERSTRIP				
XA/B, ZF/G	54, 71		2	C5AZ 62 214A18 A
– – 21436/7 – – WEATHERSTRIP ASSY. – DOOR GLASS FRONT AT BELT				
XA/B, ZF/G	54, 71	R.H. – with vent window	1	XA 54 21436 A
XA/B, ZF/G	54, 71	R.H. – ventless window	1	XA 54 21436 B
XA/B	54B, 66, 78	R.H.	1	XA 65 21436 B
XA/B	65D,H	R.H.	1	XA 65 21436 A
XA/B	66B	NZ only	1	XA 65 21436 C
XA/B, ZF/G	54, 71	L.H. – with vent wondow	1	XA 54 21437 A
XA/B, ZF/G	54, 71	L.H. – ventless window	1	XA 54 21437 B
XA/B	65B, 66, 78	L.H.	1	XA 65 21437 B
XA/B	65D,H	L.H.	1	XA 65 21437 A
XA/B	66B	NZ only	1	XA 65 21437 C

MODEL	BODY TYPE	REMARKS	UNIT	PART NUMBER
– – 21448/9 – – WEATHERSTRIP ASSY. – DOOR VENT WINDOW				
XA/B, ZF/G	54, 71	R.H.	1	XA 54 21448 A
XA/B, ZF/G	54, 71	L.H.	1	XA 54 21449 A
– – 21452/3 – – WEATHERSTRIP ASSY. – FRONT DOOR GLASS AT BELT – OUTSIDE				
XA/B, ZF/G	54, 71	R.H. – with vent windows – 19" long	1	XA 54 21452 A
XA/B, ZF/G	54, 71	R.H. – ventless window – 30½" long	1	XA 54 21452 B
XA/B	65, 66, 78	R.H.	1	XB 65 21452 A
XA/B, ZF/G	54, 71	L.H. – with vent windows – 19" long	1	XA 54 21453 A
XA/B, ZF/G	54, 71	L.H. – ventless window – 30½ long	1	XA 54 21453 B
XA/B	65, 66, 78	L.H.	1	XB 65 21453 A
– – 21464/5 – – BRACKET – DOOR VENT WINDOW UPPER PIVOT				
XA/B, ZF/G	54, 71	R.H.	1	XA 54 21464 A
XA/B, ZF/G	54, 71	L.H.	1	XA 54 21465 A
– – 21596 – – RUN ASSY. – FRONT DOOR GLASS				
XA,ZF	54, 71	Ventless window – to 2/73	2	XA 54 21596 C
XA/B, ZF/G	54, 71	Ventless window – R.H. – from 2/73	1	XA 54 21596 C
XA/B, ZF/G	54, 71	Ventless window – L.H. – from 2/73	1	XA 54 21596 D
XA/B, ZF/G	54, 71	With vent window	2	XA 54 21596 A
– – 21660 – – RUN – DOOR VENT WINDOW DIVISION BAR GLASS				
XA/B, ZF/G	54, 71		2	XA 54 21660 A
– – 217A26/7 – – RETAINER ASSY. – FRONT DOOR GLASS RUN FRONT				
XA/B, ZF/G	54, 71	R.H.	1	XA 54 217A26 A
XA/B, ZF/G	54, 71	L.H.	1	XA 54 217A27 A
XA/B, ZF/G	54, 71	Screw & washer assy. – retainer to door	2	57502 S36*
– – 21742 – – BRACKET ASSY. – DOOR WINDOW STOP UPPER				
XA/B	65, 66, 78		6	XA 65 21742 A
– – 21758 – – STOP ASSY. – FRONT DOOR WINDOW LOWER				
XA/B, ZF/G	All	Power window	2	XA 54 21758 A
– – 21762 – – BUMPER – DOOR WINDOW STOP				
XB,ZG	54, 71	With power window	4	XB 54 21762 A
– – 21768 – – STOP ASSY. – DOOR WINDOW UPPER				
XA/B	65, 66, 78		4	D1ZZ 65 21768 A
– – 21790 – – BRACKET ASSY. – DOOR WINDOW STOP LOWER				
XA/B	65	Power window	1	D1ZZ 65 21790 A
– – 21812/3 – – LATCH ASSY. – FRONT DOOR				
XA/B, ZF/G	All	R.H.	1	XB 54 21812 A
XA/B, ZF/G	All	L.H.	1	XB 54 21813 A
– – 21816 – – ADJUSTER – DOOR LOCK ACTUATING ROD				
XA/B, ZF/G	All		1	C5AZ 62 21816 A
– – 21850 – – KNOB – DOOR LOCK CONTROL ROD				
XA/B, ZF/G	All	To 1/75	2/4	C8AZ 62 21850 A
XB,ZG	All	From 1/75	2/4	XB 54 21850 A*
– – 21852/3 – – ROD – DOOR LOCK PUSH BUTTON				
XA/B, ZF/G	54, 71	R.H. – to 1/75	1	XA 54 21852 A
XB,ZG	54, 71	R.H. – from 1/75	1	XB 54 21852 A*
XA/B	65, 66, 78	R.H. – to 1/75	1	XA 65 21852 A
XB	65, 66, 78	R.H. – from 1/75	1	XB 65 21852 A*
XA/B, ZF/G	54, 71	L.H. – to 1/75	1	XA 54 21853 A
XB,ZG	54, 71	L.H. – from 1/75	1	XB 54 21853 A*
XA/B	65, 66, 78	L.H. – to 1/75	1	XA 65 21853 A
XB	65, 66, 78	L.H. – from 1/75	1	XB 65 21853 A*
– – 21914/5 – – LINK ASSY. – DOOR LATCH REMOTE CONTROL				
XA/B, ZF/G	54, 71	R.H.	1	XA 54 21914 B
XA/B	65, 66, 78	R.H.	1	XA 65 21914 A
XA/B, ZF/G	54, 71	L.H.	1	XA 54 21915 B
XA/B	65, 66, 78	L.H.	1	XA 65 21915 A
XA/B, ZF/G	All	Screw – lock to door inner panel	4	50809 S36

MODEL	BODY TYPE	REMARKS	UNIT	PART NUMBER
– – 21954 – – CLIP – DOOR LOCK CONTROL LINK RETAINING				
XA/B, ZF/G	71, 78		10	XA 54 21954 A
XA/B, ZF/G	All	To 1/75	3	XA 54 21954 B
XB,ZG	All	From 1/75	a/r	XB 54 21954 B*
– – 21970 – – LEVER – DOOR LOCK OPERATING				
XA/B, ZF/G	All		1/2	D2AZ 65 21970 A
– – 21976 – – RETAINER – DOOR LATCH ROD				
XB,ZG	All	From 10/74	2/4	XB 54 21976 A
– – 21984 – – CYLINDER ASSY. – FRONT DOOR LOCK				
XA/B, ZF/G	All		2	D2AZ 65 21984 A
XA/B, ZF/G	All	Screw – att. 21984 & 26414 to door inner panel T.S.B.	2	50809 S36
XA/B, ZF/G	All	Clip – att. 21984 & 26414 to door inner panel T.S.B.	2	383871 S2
– – 21999 – – GROMMET – DOOR LOCK KNOB				
XA, ZF	54A,B,C,E		4	XY 54 21999 AA
XA,ZF	54D,G,H,		4	C7SZ 65 21999 B
XA/B	65, 66, 78		2	C7SZ 65 21999 B
XB,ZG	54, 71		4	XB 54 21999 A
– – 22008 – – STRIKER ASSY. – DOOR LOCK				
XA/B, ZF/G	All	To 11/73	2/4	C5AZ 62 22008 A
XB,ZG	All	From 11/73	2/4	XA 54 22008 A
XA/B, ZF/G	All	Screw – 5/16" – 18 x .75"	8	382619 S36
– – 22021 – – RETAINER – DOOR LOCK ANCHOR STRIKER PLATE				
XA/B, ZF/G	All		4	XA 54 22021 A
– – 22023 – – RETAINER – DOOR LOCK CYLINDER				
XA/B, ZF/G	All		a/r	C5AZ 62 22023 A
– – 22024 – – PLATE – DOOR LOCK STRIKER ANCHOR				
XA/B, ZF/G	All		4	XA 54 22024 A
– – 22050 – – DOOR & IGNITION LOCK SET				
XA/B, ZF/G	54, 71	For installation remove plastic insulation on ignition switch	1	D2AZ 65 22050 A
– – 22053 – – KEY – DOOR IGNITION LOCK – BLANK				
XA/B, ZF/G	All		2	C7AZ 62 22053 A
– – 22134 – – ROD – DOOR LOCK CONTROL TO CYLINDER				
XA/B, ZF/G	All		2	XA 54 22134 A
– – 22152 – – ROD – FRONT DOOR LATCH ACTUATING				
XA/B, ZF/G	All	To 1/75	2	XA 54 22152 B
XB,ZG	All	From 1/75	2	XB 54 22152 A*
– – 222A00/1 – – RETAINER ASSY. – FRONT DOOR GLASS RUN LOCKSIDE				
XA,ZF	54, 71	R.H. – to 9/72	1	XA 54 222A00 A
XA/B, ZF/G	54, 71	R.H. – from 9/72	1	XA 54 222A00 B
XA,ZF	54, 71	L.H. – to 9/72	1	XA 54 222A01 A
XA/B, ZF/G	54, 71	L.H. – from 9/72	1	XA 54 222A01 B
XA/B, ZF/G	54, 71	Screw & washer – ¼" – 20 x .50" – att. 222A00/1 to 20124/5	2	57487 S36
– – 222B08 – – CLIP – DOOR GLASS OUTER				
XA/B	54, 66, 71		2	D1AZ 65 222B08 A
– – 22220/1 – – FRAME ASSY. – FRONT DOOR GLASS				
XA/B, ZF/G	54, 71	R.H.	1	XA 54 22220 B
XA/B, ZF/G	54, 71	L.H.	1	XA 54 22221 B
– – 222A44 – – CLIP – WINDOW TOP INNER DOOR				
XA/B	65, 66, 78		2	D1ZZ 65 222A44 A
– – 222A92 – – GUIDE – DOOR WINDOW LOWER				
XA/B	65, 66, 78		2	D1ZZ 65 222A92 A
– – 222A94 – – PLATE – DOOR VENT WINDOW DIV. BAR SCUFF				
XA/B	54H	Vent window	2	XA 54 222A94 A

MODEL	BODY TYPE	REMARKS	UNIT	PART NUMBER			
— — 22296/7 — — BAR ASSY. — DOOR VENT WINDOW							
XA/B, ZF/G	54A,B,C,D,E,G, 71	R.H.	1	XA	54	22296	A
XA/B	54H	R.H.	1	XA	54	22296	B
XA/B, ZF/G	54A,B,C,D,E,G, 71	L.H.	1	XA	54	22297	A
XA/B	54H	L.H.	1	XA	54	22297	B
— — 223A58 — — ANTI RATTLE — DOOR WINDOW LOWER GUIDE							
XA/B	65, 66, 78		4	D1ZZ	65	223A58	A
— — 22362 — — GUIDE — DOOR WINDOW UPPER							
XA/B	65, 66, 78		2	D1ZZ	65	22362	A
— — 223A72 — — RUN & BRACKET ASSY. — DOOR GLASS							
XA/B	65, 66, 78		2	XA	65	223A72	A
— — 22380/1 — — STABILIZER ASSY. — DOOR GLASS INNER							
XA/B	65, 66, 78	R.H.	2	XA	65	22380	A
XA/B	65, 66, 78	L.H.	2	XA	65	22381	A
— — 22400/1 — — HANDLE ASSY. — FRONT DOOR OUTSIDE							
XA	All		2	XA	54	22400	A
XB,ZF/G	All	R.H.	1	ZF	54	22400	A
XB, ZF/G	All	L.H.	1	ZF	54	22401	A
XA/B, ZF/G	All	Nut — ¼" — 20 — handle to door	2	114323 ES8			
— — 22410 — — PLATE — FRONT DOOR OUTSIDE HANDLE MOUNTING							
XB, ZF/G	All		4	ZF	54	22410	A
— — 22422 — — LEVER — FRONT DOOR HANDLE RELEASE							
XA/B, ZF/G	All		2	C60B	62	22422	B
— — 22428 — — PAD — DOOR OUTSIDE HANDLE							
XB, ZF/G	All		4	ZF	54	22428	A
— — 224A32/3 — — PLATE & LEVER ASSY. — DOOR OUTSIDE HANDLE							
XA	All	R.H.	1/2	XA	54	224A32	A
XA	All	L.H.	1/2	XA	54	224A33	A
— — 22600/1 — — HANDLE — DOOR INSIDE							
XA,ZF	All	R.H.	1/2	XA	54	22600	AA
XA,ZF	All	L.H.	1/2	XA	54	22601	AA
XB,ZG	All	R.H.	1/2	XB	54	22600	A
XB,ZG	All	L.H.	1/2	XB	54	22601	A
— — 226K23 — — BEZEL — DOOR LOCK HANDLE INSIDE							
XA/B, ZF/G	All		2/4	CH	54	226K23	AB
— — 22800/1 — — HINGE ASSY. — FRONT DOOR UPPER							
XA/B, ZF/G	All	R.H.	1	XA	54	22800	A
XA/B, ZF/G	All	L.H.	1	XA	54	22801	A
XA/B, ZF/G	All	Screw — 5/16" — 18 x 1" — hex. wshr. hd. — (6) hinge to door, (6) hinge to body	12	V 388028 S2			
— — 22806/7 — — HINGE & CHECK ASSY. — DOOR LOWER							
XA/B, ZF/G	All	R.H.	1/2	XA	54	22806	A
XA/B, ZF/G	All	L.H.	1/2	XA	54	22807	A
— — 22840 — — PIN — DOOR HINGE							
XA/B, ZF/G	All		2/4	ARC6DB	54	22840	B
— — 22841 — — BUSHING — DOOR HINGE							
XA/B, ZF/G	All	Upper	2/4	ARC6DB	54	22841	A
XA/B, ZF/G	All	Lower — to 3/74	2/4	D1AZ	65	22841	A
XB,ZG	All	Lower — from 3/74	2/4	XB	54	22841	A*
— — 229A10 — — SHAFT ASSY. — FRONT DOOR VENT WINDOW HANDLE							
XA/B, ZF/G	54, 71		2	XA	54	229A10	A
XA/B, ZF/G	54, 71	Washer — cap lock special — att. 229A10	2	111145 ES			
XA/B, ZF/G	54, 71	Nut — attach 229A10 to 21412/3	2	V 388273 S36			

MODEL	BODY TYPE	REMARKS	UNIT	PART NUMBER
– – 22916/7 – – HANDLE ASSY. – DOOR VENT WINDOW				
XA/B, ZF/G	54, 71	R.H.	1	XA 54 22916 A
XA/B, ZF/G	54, 71	L.H.	1	XA 54 22917 A
XA/B, ZF/G	54, 71	Washer – special sealing – handle assy. to shaft	2	111143 ES
XA/B, ZF/G	54, 71	Washer – lock special – handle assy. to shaft	2	111145 ES
– – 22920 – – KEY – DOOR VENT WINDOW FRAME HANDLE LOCKING				
XA/B, ZF/G	54, 71		2	XA 54 22920 A
– – 22926 – – SPRING – DOOR VENT WINDOW PIVOT				
XA/B, ZF/G	54, 71		2	B5A 70 22926 A
– – 22986 – – SPRING – DOOR VENT WINDOW HANDLE				
XA/B, ZF/G	54, 71		2	B9A 64 22986 A
– – 23200/1 – – REGULATOR ASSY. – FRONT DOOR WINDOW – MANUAL				
XA/B, ZF/G	54, 71	R.H. – with ventless windows – to 12/73 – O.R.C. (1) XA 54 23200 E, (1) XA 54 23230 B	1	XA 54 23200 C
XB,ZG	54, 71	R.H. – with ventless window – from 12/73	1	XA 54 23200 E
XA/B, ZF/G	54, 71	R.H. – with vent windows	1	XA 54 23200 D
XA/B	65	R.H.	1	XA 65 23200 A
XA/B	66, 78	R.H.	1	XA 66 23200 A
XA/B, ZF/G	54, 71	L.H. – with ventless windows – to 12/73 – O.R.C. (1) XA 54 23201 E, (1) XA 54 23230 B	1	XA 54 23201 C
XB,ZG	54, 71	L.H. – with ventless window – from 12/73	1	XA 54 23201 E
XA/B, ZF/G	54, 71	L.H. – with vent windows	1	XA 54 23201 D
XA/B	65	L.H.	1	XA 65 23201 A
XA/B	66, 78	L.H.	1	XA 66 23201 A
XA/B, ZF/G	All	Screw & washer – ¼" – 20 x .50" – att. 23200/1 to 20124/5	8	57487 S36
– – 23208 – – REGULATOR – FRONT DOOR WINDOW LESS MOTOR				
XA,ZF	54C-H, 71D	R.H. – electric with ventless window – to 12/72	1	XA 54 23208 B
XA/B, ZF/G	54C-H, 71D	R.H. – electric with ventless window – from 12/72	1	XA 54 23208 C
XA/B, ZF/G	54, 71	R.H. – electric with vent window	1	XA 54 23208 A
XA/B	65D,H	R.H. – electric	1	XA 65 23208 A
XA,ZF	54C-H, 71D	L.H. – electric with ventless window – to 12/72	1	XA 54 23209 B
XA/B, ZF/G	54C-H, 71D	L.H. – electric with ventless window – from 12/72	1	XA 54 23209 C
XA/B, ZF/G	54, 71	L.H. – electric with vent window	1	XA 54 23209 A
XA/B	65D,H	L.H. – electric	1	XA 65 23209 A
– – 23230 – – BRACKET ASSY. – FRONT DOOR EQUALIZER ARM				
XA/B, ZF/G	54, 71	Manual	2	XA 54 23230 B
XA/B, ZF/G	54C,D,E,G, 71D	Electric – from 12/72	2	XA 54 23230 C
– – 23240 – – ROLLER – WINDOW REGULATOR GUIDE				
XA/B, ZF/G	54, 71	Front door – electric windows	4	XA 54 23240 A
XA/B, ZF/G	54, 71	Rear door – electric windows	4	XB 54 23240 A
– – 23258 – – BUSHING – DOOR WINDOW GLASS BRACKET				
XA/B	65, 66, 78		6	C9ZZ 65 23258 A
– – 232A70/1 – – BRACE ASSY. – FRONT DOOR INNER PANEL REGULATOR				
XA/B, ZF/G	54C-H, 71D	R.H. – electric window	1	XA 54 232A70 B
XA/B, ZF/G	54C-H, 71D	L.H. – electric window	1	XA 54 232A71 B
– – 23276/7 – – BRACKET ASSY. – FRONT DOOR WINDOW GLASS CHANNEL				
XA/B, ZF/G	54, 71	With ventless window	2	XA 54 23276 B
XA/B, ZF/G	54, 71	With vent window	2	XA 54 23276 A
XA/B	65, 66, 78	R.H.	1	XA 65 23276 A
XA/B	65, 66, 78	L.H.	1	XA 65 23277 A
– – 23318 – – SPRING – REGULATOR COUNTER BALANCE (REFER ALSO 30351)				
XA/B	65	Front door – power window	2	XA 65 23318 A
– – 23326 – – ANTI-RATTLE – DOOR WINDOW REG. SWITCH TO INNER PANEL				
XA/B	54C-H, 71D	Electric windows – from 12/72	2	XA 54 23326 A

MODEL	BODY TYPE	REMARKS	UNIT	PART NUMBER
– – 23342 – – HANDLE ASSY. – DOOR WINDOW REGULATOR				
XA/B, ZF/G	54, 71		4	ARC8DB 54 23342 A
XA/B	65, 66, 78		2	ARC8DB 54 23342 A
XA/B, ZF/G	All	Screw – No. 8 – 32 x .62" – handle to regulator assy.	2/4	381571 S13
– – 23352 – – KNOB – DOOR WINDOW REGULATOR HANDLE				
XA/B, ZF/G	All		2/4	XT 54 23352 B
– – 23362 – – COVER – DOOR WINDOW REGULATOR HANDLE				
XA/B, ZF/G	All		2/4	C6AZ 62 23362 A
– – 23370 – – PLATE – WINDOW REGULATOR HANDLE				
XA/B, ZF/G	All		2/4	C8AZ 62 23370 A
– – 23394/5 – – MOTOR & DRIVE ASSY. – DOOR WINDOW REGULATOR				
XA/B, ZF/G	54, 65, 71	R.H. – with electric windows	1/2	D0AZ 57 23394 A
XA/B, ZF/G	54, 65, 71	L.H. – with electric windows	1/2	D0AZ 57 23395 A
– – 234A14/5 – – RETAINER – DOOR VENT WINDOW DIVISION BAR GLASS RUN				
XA/B, ZF/G	54, 71	R.H.	1	XA 54 234A14 A
XA/B, ZF/G	54, 71	L.H.	1	XA 54 234A15 A
XA/B, ZF/G	54, 71	Screw & washer – ¼" – 20 x .50" – att. 234A14/5 to 20124/5	2	57487 S36
– – 234A24 – – KIT – WINDOW REGULATOR GEAR SET				
XA/B, ZF/G	54, 65, 71	Electric window only	2/4	D0AZ 62 234A24 B
– – 234A46 – – RETAINER ASSY. – DOOR WINDOW GLASS CHANNEL BRACKET				
XA/B, ZF/G	54, 71		10	D0DZ 62 234A46 A
– – 237A30/1 – – RETAINER – FRONT DOOR TRIM AT BELT				
XA/B, ZF/G	54D,G,H, 71D	R.H.	1	XA 54 237A30 A
XA/B, ZF/G	54D,G,H, 71D	L.H.	1	XA 54 237A31 A

– – 23916/7 – – REFER SOFT TRIM SECTION

– – 23942/3 – – REFER SOFT TRIM SECTION

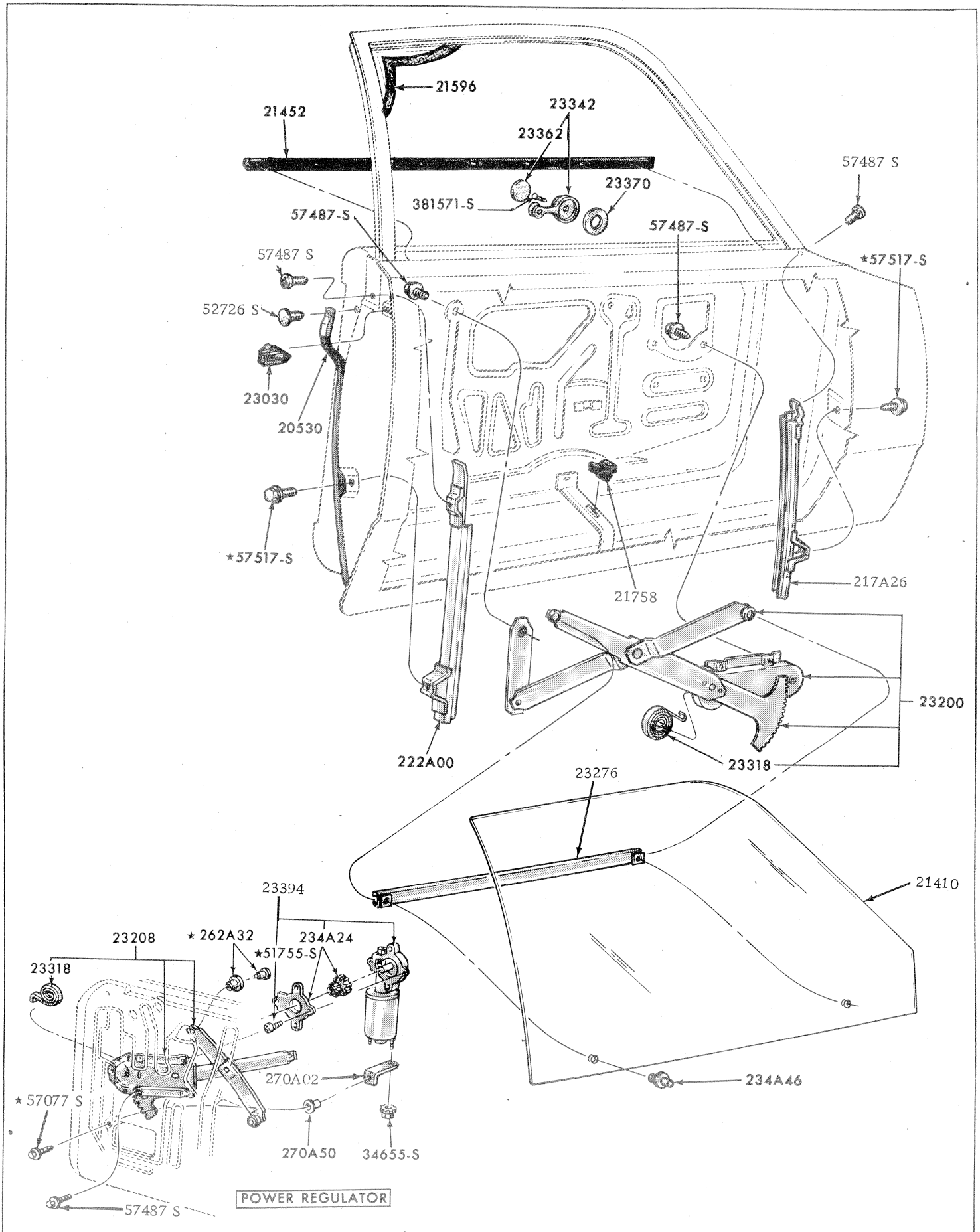

FRONT DOOR MECHANISM 54 71 EXCEPT WITH VENT WINDOW

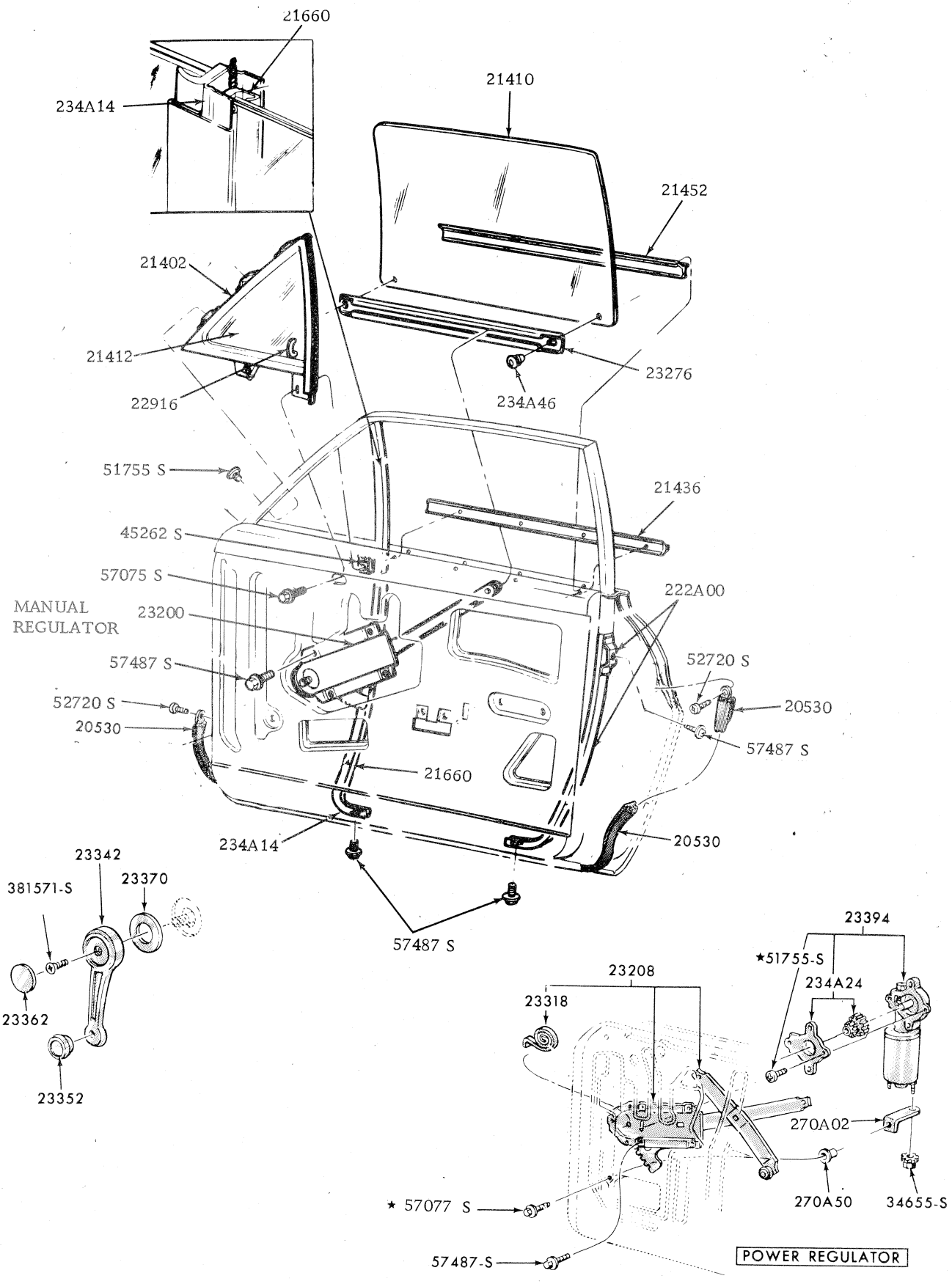

No01-14 1

FRONT DOOR MECHANISM 54 71 WITH VENT WINDOW

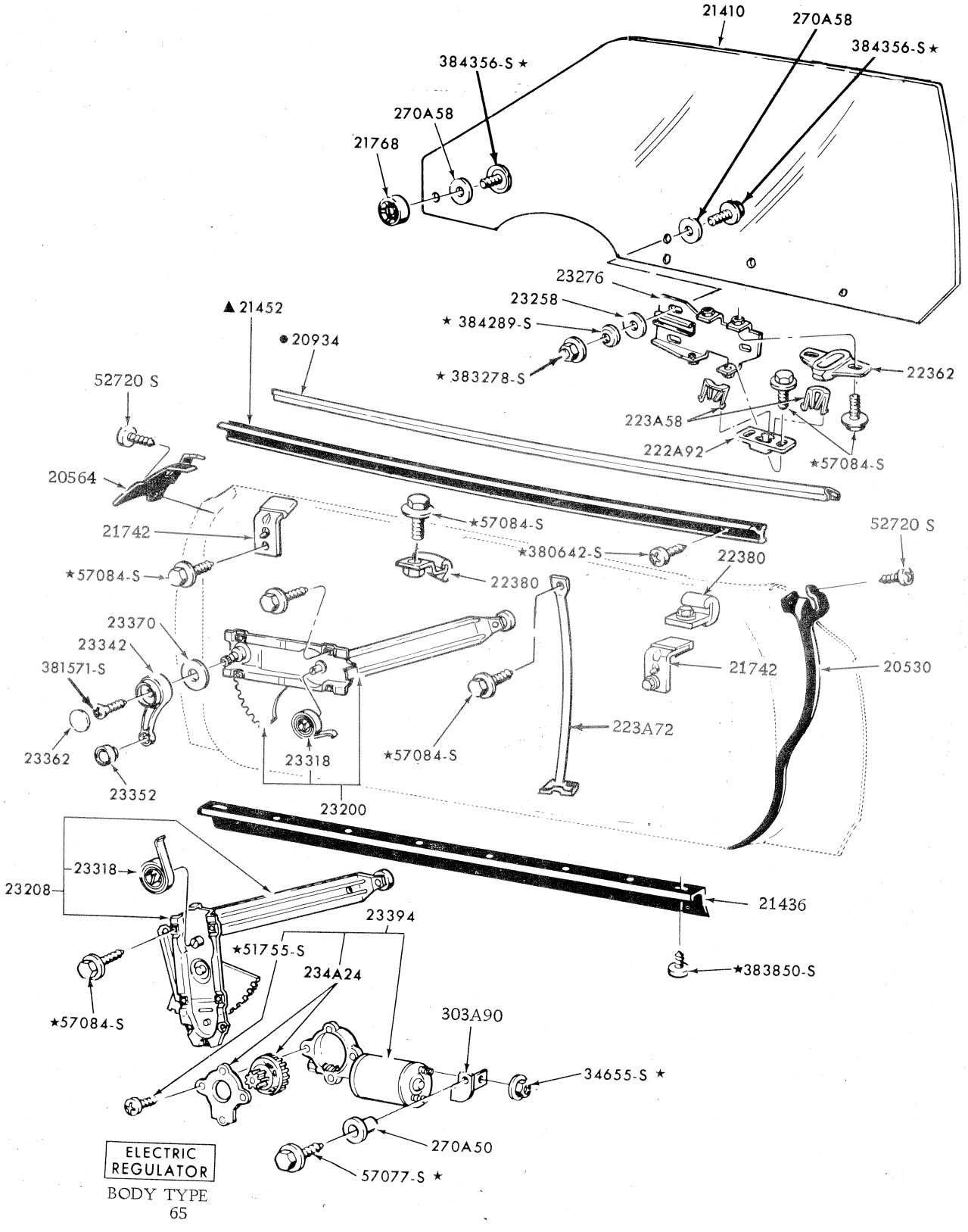

N01 11 1A/1B

FRONT DOOR WINDOW & RELATED PARTS BODY TYPE 65,66,78

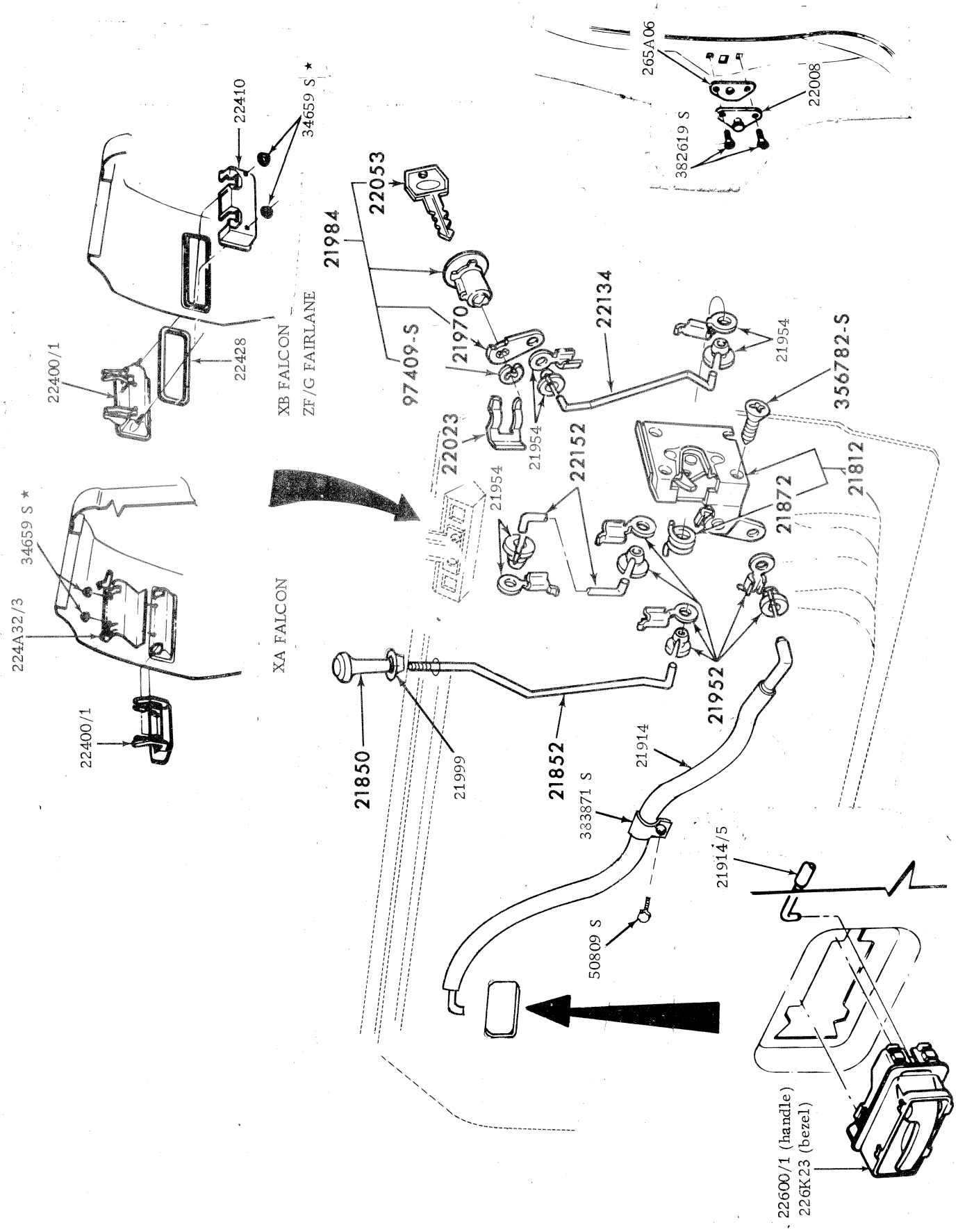

TYPICAL FRONT DOOR HANDLE AND LOCK MECHANISM

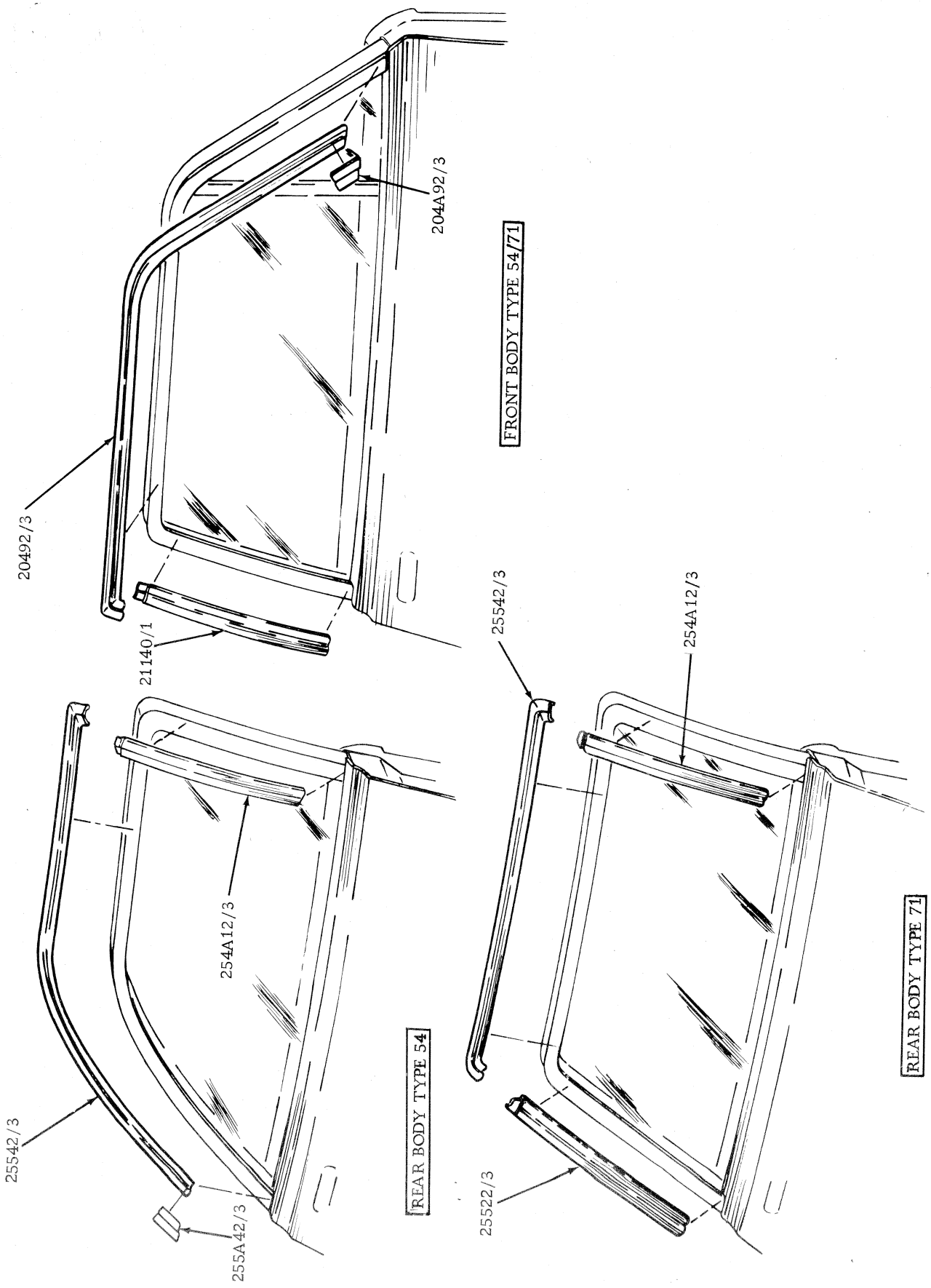
20492/3
21140/1
204A92/3
FRONT BODY TYPE 54/71
25542/3
254A12/3
254A12/3
25542/3
255A42/3
REAR BODY TYPE 54
25542/3
254A12/3
25522/3
REAR BODY TYPE 71

MODEL	BODY TYPE	REMARKS	UNIT	PART NUMBER			
– – 24100 – – REFER SOFT TRIM SECTION							
– – 24300/1 – – PILLAR ASSY. – CENTRE BODY							
XA/B, ZF/G	54, 71	R.H.	1	XA	54	24300	A
XA/B	66, 78	R.H.	1	XA	66	243A00	B
XA/B, ZF/G	54, 71	L.H.	1	XA	54	24301	A
XA/B	66, 78	L.H.	1	XA	66	243A01	B
– – 24312 – – PILLAR – BODY INNER CENTRE							
XA/B	66, 78	R.H. – to 1/75	1	XA	66	24312	A
XB	66, 78	R.H. – from 1/75	1	XA	66	24312	B*
XA/B	66, 78	L.H. – to 1/75	1	XA	66	24313	A
XB	66, 78	L.H. – from 1/75	1	XA	66	24313	B*
– – 243A26 – – FILLER – PILLAR CENTRE BODY OUTER REAR							
XA/B, ZF/G	54, 71		2	XA	54	243A26	A
– – 24328 – – PLATE – DOOR HINGE ANCHOR (REFER 24454 ALSO)							
XA/B, ZF/G	54, 71	Rear door – upper	2	XA	54	24328	A
XA/B, ZF/G	All	Front door – upper & lower	4	XA	54	24328	A
– – 243A28 – – FILLER – PILLAR CENTRE BODY OUTER FRONT							
XA/B, ZF/G	All		2	XA	54	243A28	A
– – 24452 – – CAP – CENTRE BODY PILLAR FINISH							
XA/B, ZF/G	54, 71	Paint to suit	1	XA	54	24452	AP
– – 24454 – – PLATE – DOOR HINGE ANCHOR (REFER 24328 ALSO)							
XA/B, ZF/G	54, 71	Rear door – lower	2	XA	54	24454	A
– – 24458/9 – – MOULDING – CENTRE BODY PILLAR OUTSIDE UPPER (REFER 29300 FOR ATTACHING KIT)							
XA/B, ZF/G	54D,G, 71D	R.H.	1	XA	54	24458	A
XA/B, ZF/G	54D,G, 71D	L.H.	1	XA	54	24459	A
XA/B, ZF/G	All	Screw – No. 8 – 18 x .38" – moulding to body	a/r	379560 S			
– – 24478/9 – – REFER SOFT TRIM SECTION							
– – 24592/3 – – REFER SOFT TRIM SECTION							
– – 24630/1 – – DOOR ASSY. – REAR							
XA	54	R.H.	1	XA	54	24630	A
XA	71	R.H.	1	XA	71	24630	A
XB, ZF/G	54	R.H.	1	ZF	54	24630	A
XB	71	R.H.	1	XB	71	24630	A
XA	54	L.H.	1	XA	54	24631	A
XA	71	L.H.	1	XA	71	24631	A
XB, ZF/G	54	L.H.	1	ZF	54	24631	A
XB	71	L.H.	1	XB	71	24631	A
– – 24704/5 – – PANEL – REAR DOOR OUTSIDE							
XA	54, 71	R.H.	1	XA	54	24704	A
XB, ZF/G	54, 71	R.H.	1	ZF	54	24704	A
XA	54, 71	L.H.	1	XA	54	24705	A
XB, ZF/G	54, 71	L.H.	1	ZF	54	24705	A
– – 253A12/3 – – STRIPE – REAR DOOR – RALLY PACK							
XA, ZF	54, 71	R.H. – black	1	XA	54	253A12	A1A
XA, ZF	54, 71	R.H. – gold	1	XA	54	253A12	A1G
XA, ZF	54, 71	R.H. – silver	1	XA	54	253A12	A1L
XA, ZF	54, 71	R.H. – orange	1	XA	54	253A12	A1V
XB	54, 71	R.H. – black	1	XB	54	253A12	AA1A
XB	54, 71	R.H. – gold	1	XB	54	253A12	AA1G
XB	54, 71	R.H. – silver	1	XB	253A12		AA1L
XB	54, 71	R.H. – orange	1	XB	54	253A12	AA1V
XA, ZF	54, 71	L.H. – black	1	XA	54	253A13	A1A
XA, ZF	54, 71	L.H. – gold	1	XA	54	253A13	A1G
XA, ZF	54, 71	L.H. – silver	1	XA	54	253A13	A1L
XA, ZF	54, 71	L.H. – orange	1	XA	54	253A13	A1V
XB	54, 71	L.H. – black	1	XB	54	253A13	AA1A
XB	54, 71	L.H. – gold	1	XB	54	253A13	AA1G
XB	54, 71	L.H. – silver	1	XB	54	253A13	AA1L
XB	54, 71	L.H. – orange	1	XB	54	253A13	AA1V

MODEL	BODY TYPE	REMARKS	UNIT	PART NUMBER
– – 253A14/5 – – SUPPORT ASSY. – REAR DOOR LOWER WEATHERSTRIP				
XB, ZG	54, 71	R.H.	1	XB 54 253A14 A
XB, ZG	54, 71	L.H.	1	XB 54 253A15 A
– – 25324/5 – – WEATHERSTRIP ASSY. – REAR DOOR				
XA, ZF	54, 71	R.H.	1	XA 54 25324 A
XB, ZG	54, 71	R.H.	1	XB 54 25324 A
XA/B	78	R.H. – with back doors – to 10/73	1	XA 78 25324 AA
XA/B	78	R.H. – with back doors – from 10/73	1	XA 78 25324 B
XA, ZF	54, 71	L.H.	1	XA 54 25325 A
XB, ZG	54, 71	L.H.	1	XB 54 25325 A
XA/B	78	L.H. – with back doors – to 10/73	1	XA 78 25325 AA
XA/B	78	L.H. – with back doors – from 10/73	1	XA 78 25325 B
XA, ZF	54, 71	Screw – No. 8 – 15 x .38" – weatherstrip to door	4	52720 S8
XA, ZF	54, 65, 66, 78	Clip – weatherstrip to door	2	V 388272 S
XA/B	78	Screw – No. 10 – 12 x .75" – weatherstrip to rear door	1	52743 S13
XA/B	66, 78	Screw – No. 10 – 12 x ½"	1	52727 S8
– – 253A26 – – WEATHERSTRIP ASSY. – L.H. BACK DOOR BOTTOM				
XA/B	78	With back orders	1	XA 78 253A26 AA
XA	78	Screw – No. 10 – w/strip to door	2	52743 S13
XA/B	78	Screw – No. 10 – 12 x ½" – w/strip to body	2	52727 S8
– – 254A12/3 – – MOULDING – REAR DOOR OUTSIDE TOP FRONT				
XA/B, ZF/G	54D,G, 71D	R.H.	1	XA 54 254A12 A
XA/B, ZF/G	54D,G, 71D	L.H.	1	XA 54 254A13 A
– – 254A16 – – MOULDING ASSY. – REAR DOOR OUTSIDE (REFER 29300 FOR ATTACHING KIT)				
XA/B, ZF/G	54, 71	Black	2	XA 54 254A16 AA1A
– – 25446 – – RETAINER – DOOR OUTSIDE BELT MOULDING				
ZF/G	All		a/r	ZF 54 25446 B
– – 254A46 – – RETAINER – MOULDING				
XA/B	All	Moulding (42512) to deck lid	9	XT 54 254A46 A
XA/B, ZF/G	All	Moulding (16B068) to fender (12), moulding (29066/7) to qtr. (12 or 16) moulding – (209A34/5 & 255A54/5) to door	24/28	ZC 54 254A46 A
XA/B, ZF/G	All	Moulding (20780) to front door (6 or 8), moulding (254A16) to rear door (6)	8/12	ZC 54 254A46 B
– – 25522/3 – – MOULDING – REAR DOOR OUTSIDE TOP REAR				
XA/B	71D	R.H.	1	XA 71 25522 A
XA/B	71D	L.H.	1	XA 71 25523 A
– – 25542/3 – – MOULDING – REAR DOOR OUTSIDE TOP				
XA/B, ZF/G	54D,E,G	R.H.	1	XA 54 25542 A
XA/B	71D	R.H.	1	XA 71 25542 A
XA/B, ZF/G	54D,E,G	L.H.	1	XA 54 25543 A
XA/B	71D	L.H.	1	XA 71 25543 A
– – 255A42/3 – – MOULDING – REAR DOOR OUTSIDE REAR CAPPING				
XA/B	54D	R.H.	1	XA 54 255A42 A
XA/B	54D	L.H.	1	XA 54 255A43 A
– – 255A54/5 – – MOULDING – REAR DOOR OUTSIDE – BELT (REFER 29300 FOR ATTACHING KIT)				
ZF/G	54G	R.H.	1	ZF 54 255A54 A
ZF/G	54G	L.H.	1	ZF 54 255A55 A
– – 25596/7 – – WEATHERSTRIP ASSY. – REAR DOOR GLASS AT BELT OUTSIDE (ALSO 25860/1)				
XA/B, ZF/G	54, 71	R.H.	1	XA 54 25596 A
XA/B, ZF/G	54, 71	L.H.	1	XA 54 25597 A
– – 25622 – – TRANSFER – REAR QUARTER				
XA/B	65B	"Superbird" – R.H.	1	XA 65 25622 A
XA/B	65B	"Superbird" – L.H.	1	XA 65 25622 B

MODEL	BODY TYPE	REMARKS	UNIT	PART NUMBER
– – 25712/3 – – GLASS – REAR DOOR WINDOW				
XA/B, ZF/G	54	R.H. – clear	1	XA 54 25712 B
XA/B, ZF/G	54	R.H. – tinted	1	XA 54 25712 C
XA/B	71	R.H. – clear	1	XA 71 25712 B
XA/B	71	R.H. – tinted – manual window	1	XA 71 25712 BB
XA/B	71	R.H. – tinted – electric window	1	XA 71 25712 C
XA/B, ZF/G	54	L.H. – clear	1	XA 54 25713 B
XA/B, ZF/G	54	L.H. – tinted	1	XA 54 25713 C
XA/B	71	L.H. – clear	1	XA 71 25713 B
XA/B	71	L.H. – tinted – manual window	1	XA 71 25713 BB
XA/B	71	L.H. – tinted – electric window	1	XA 71 25713 C
– – 25722 – – GLASS – BACK DOOR WINDOW				
XA/B	78		2	XA 78 25722 AA
– – 25766 – – RUN ASSY. – REAR DOOR GLASS TOP				
XA/B, ZF/G	54		2	XA 54 25766 A
XA/B	71		2	XA 71 25766 A
– – 25796/7 – – RETAINER ASSY. – REAR DOOR GLASS RUN FRONT				
XA/B, ZF/G	54, 71	R.H.	1	XA 54 25796 A
XA/B, ZF/G	54, 71	L.H.	1	XA 54 25797 A
– – 25860/1 – – WEATHERSTRIP ASSY. – REAR DOOR GLASS AT BELT INSIDE (ALSO REFER 25596/7)				
XA/B, ZF/G	54, 71	R.H.	1	XA 54 25860 A
XA/B, ZF/G	54, 71	L.H.	1	XA 54 25861 A
– – 263A52/3 – – BRACKET ASSY. – REAR DOOR WINDOW GLASS CHANNEL				
XA/B, ZF/G	54, 71	Manual window	2	XA 54 263A52 A
XA/B, ZF/G	54, 71	R.H. – electric window	1	XA 54 263A52 B
XA/B, ZF/G	54, 71	L.H. – electric window	1	XA 54 263A53 B
– – 263A58/9 – – RETAINER & DIVISION BAR – REAR DOOR GLASS RUN				
XA/B, ZF/G	54A,B,C,D,E,G	R.H.	1	XA 54 263A58 A
XA/B	54H	R.H.	1	XA 54 263A58 B
XA/B	71	R.H.	1	XA 71 263A58 A
XA/B, ZF/G	54A,B,C,D,E,G	L.H.	1	XA 54 263A59 A
XA/B	54H	L.H.	1	XA 54 263A59 B
XA/B	71	L.H.	1	XA 71 263A59 A
XA/B, ZF/G	54, 71	Screw – 32 x .38" – att. retainer & div. bar	2	376129 S2
– – 26408/9 – – LINK ASSY. – REAR DOOR LOCK CONTROL ROD				
XA/B, ZF/G	54, 71	R.H.	1	XA 54 26408 A
XA/B, ZF/G	54, 71	L.H.	1	XA 54 26409 A
– – 26412/3 – – LOCK ASSY. – REAR DOOR				
XA, ZF	54, 71	R.H. – to 7/72	1	XB 54 26412 A
XA/B, ZF/G	54, 71	R.H. – from 7/72 to 11/73	1	XA 54 26412 B
XB, ZG	54, 71	R.H. – from 11/73	1	XB 54 26412 A
XA, ZF	54, 71	L.H. – to 7/72	1	XB 54 26413 A
XA/B, ZF/G	54, 71	L.H. – from 7/72 to 11/73	1	XA 54 26413 B
XB, ZG	54, 71	L.H. – from 11/73	1	XB 54 26413 A
– – 26442/3 – – LINK – REAR DOOR LOCK REMOTE CONTROL				
XA/B, ZF/G	54, 71	R.H.	1	XA 54 26442 AB
XA/B, ZF/G	54, 71	L.H.	1	XA 54 26443 AB
– – 26448 – – BELLCRANK ASSY. – REAR DOOR LOCK CONTROL				
XA/B, ZF/G	54, 71		2	C9AZ 54 26448 A
– – 26460 – – ROD – REAR DOOR LOCK PUSH BUTTON				
XA/B, ZF/G	54, 71	To 1/75	2	XA 54 26460 AB
XB, ZG	54, 71	From 1/75	2	XB 54 26460 A*
– – 265A06 – – SHIM – DOOR LOCK STRIKER PLATE				
XA/B, ZF/G	All		a/r	C4DZ 54 265A06 A
– – 265A96 – – ROD & WASHER – REAR DOOR OUTSIDE HANDLE ACTUATING				
XA/B, ZF/G	54, 71		2	XA 54 265A96 AC

MODEL	BODY TYPE	REMARKS	UNIT	PART NUMBER
– – 26600/1 – – HANDLE ASSY. – REAR DOOR OUTSIDE				
XA	54, 71	R.H.	1	XA 54 26600 A
XB, ZF/G	54, 71	R.H.	1	ZF 54 26600 A
XA	54, 71	L.H.	1	XA 54 26601 A
XB, ZF/G	54, 71	L.H.	1	ZF 54 26601 A
XA/B, ZF/G	54, 71	Nut – ¼" – 20 – handle to door	4	33795 S7
– – 26614 – – RUN – REAR DOOR GLASS REAR				
XA/B, ZF/G	54		2	XA 54 26614 A
XA/B	71		2	XA 71 26614 A
– – 26800/1 – – HINGE ASSY. – REAR DOOR UPPER				
XA/B, ZF/G	54, 71	R.H.	1	XA 54 26800 A
XA/B, ZF/G	54, 71	L.H.	1	XA 54 26801 A
XA/B, ZF/G	54, 71	Screw – 5/16" – 18 x 1" – hex. wshr. hd. – (4) hinge to door, (6) hinge to pillar	10	V 388028 S2
– – 26872/3 – – GLASS – REAR DOOR STATIONARY WINDOW				
XA/B, ZF/G	54	R.H. – clear	1	XA 54 26872 A
XA/B, ZF/G	54	R.H. – tinted	1	XA 54 26872 B
XA/B	71	R.H. – clear	1	XA 71 26872 A
XA/B	71	R.H. – tinted	1	XA 71 26872 B
XA/B, ZF/G	54	L.H. – clear	1	XA 54 26873 A
XA/B, ZF/G	54	L.H. – tinted	1	XA 54 26873 B
XA/B	71	L.H. – clear	1	XA 71 26873 A
XA/B	71	L.H. – tinted	1	XA 71 26873 B
– – 26928 – – WEATHERSTRIP – REAR DOOR STATIONARY WINDOW				
XA/B, ZF/G	54		2	XA 54 26928 A
XA/B	71		2	XA 71 26928 A
– – 27000/1 – – REGULATOR ASSY. – REAR DOOR WINDOW (ALSO REFER 27008/9)				
XA/B, ZF/G	54, 71	R.H. – manual	1	XA 54 27000 A
XA/B, ZF/G	54, 71	L.H. – manual	1	XA 54 27001 A
– – 270A02 – – BRACKET – REAR DOOR WINDOW REGULATOR MOTOR				
XA/B, ZF/G	All	R.H.	2	D00Z 54 270A02 A
XA/B, ZF/G	All	L.H.	2	D00Z 54 270A03 A
– – 27008/9 – – REGULATOR – REAR DOOR WINDOW LESS MOTOR (ALSO REFER 27000/1)				
XA/B, ZF/G	54, 71	R.H. – electric windows – to 5/74	1	XA 54 27008 A
XB, ZG	54, 71	R.H. – electric windows – from 5/74	1	XB 54 27008 A*
XA/B, ZF/G	54, 71	L.H. – electric windows – to 5/74	1	XA 54 27009 A
XB, ZG	54, 71	L.H. – electric windows – from 5/74	1	XB 54 27009 A*
– – 270A50 – – SPACER – REAR DOOR WINDOW REGULATOR MOTOR BRACKET				
XA/B, ZF/G	54, 65, 71		2/4	C80Z 54 270A50 A
– – 270A58 – – WASHER – DOOR WINDOW REGULATOR ROLLER				
XA/B	65, 66, 78		10	D10Z 57 270A58 A
– – 27070/1 – – STOP ASSY. – REAR DOOR WINDOW LOWER				
XA/B, ZF/G	54, 71	R.H. – electric windows	1	XA 54 27070 A
XA/B, ZF/G	54, 71	L.H. – electric windows	1	XA 54 27071 A
– – 27406/7 – – REFER SOFT TRIM SECTION				
– – 27430/1 – – REFER SOFT TRIM SECTION				
– – 27452 – – REFER SOFT TRIM SECTION				
– – 274A60/1 – – RETAINER – REAR DOOR TRIM TO BELT				
XA/B, ZF/G	54D,G,H, 71D	R.H.	1	XB 54 274A60 A*
XA/B, ZF/G	54D,G,H, 71D	L.H.	1	XB 54 274A61 A*
– – 27566 – – PAD – DOOR TRIM PANEL – ANTI RATTLE				
XA/B, ZF/G	All		2/4	70AB T 27466 AA
– – 27470 – – HOLDER – ASH TRAY				
XA, ZF	54, 65, 71		2	XA 54 27470 A
XB	All	Black	2	XA 54 27470 A2A
XB	All	White	2	XA 54 27470 A2H
XB	All	Chamois	2	XA 54 27470 A1Q
XB	All	Saddle	2	XA 54 27470 A5F

MODEL	BODY TYPE	REMARKS	UNIT	PART NUMBER			
-- 27540/1 -- REFER SOFT TRIM SECTION							
-- 27604 -- CLIP - ASH TRAY HOLDER RETAINING							
XA/B, ZF/G	All		2	XA	54	27604	A
-- 278A26/7 -- REINFORCEMENT - PANEL - BODY SIDE OUTER							
XB	78	R.H.	1	XB	78	278A26	A*
XB	78	L.H.	1	XB	78	278A27	A*
-- 278A36/7 -- PILLAR - QUARTER WHEEL HOUSE TO ROOF INNER							
XA/B	71	R.H.	1	XA	71	278A36	A
XA/B	71	L.H.	1	XA	71	278A37	A
-- 278A38/9 -- PILLAR - QUARTER WHEEL HOUSE TO ROOF OUTER							
XA/B	71	R.H.	1	XA	71	278A38	A
XA/B	71	L.H.	1	XA	71	278A39	A
-- 278A44/5 -- PANEL - BODY SIDE INNER FRONT							
XA/B	66	R.H.	1	XA	66	278A44	A
XA/B	78	R.H.	1	XA	78	278A44	A
XA/B	66	L.H. - to 12/74	1	XA	66	278A45	A
XB	66	L.H. - from 12/74	1	XB	66	278A45	A
XA/B	78	L.H. - to 12/74	1	XA	78	278A45	A
XB	78	L.H. - from 12/74	1	XB	78	278A45	A*
-- 27846/7 -- PANEL - QUARTER							
XA	54	R.H.	1	XA	54	27846	A
XA/B	65	R.H.	1	XA	65	27846	A
XA/B	71	R.H.	1	XA	71	27846	A
ZF	54	R.H.	1	ZF	54	27846	A
XB	54	R.H.	1	XB	54	27846	A
ZG	54	R.H.	1	ZG	54	27846	A
XA	54	L.H.	1	XA	54	27847	A
XA/B	65	L.H.	1	XA	65	27847	A
XA/B	71	L.H.	1	XA	71	27847	A
ZF	54	L.H.	1	ZF	54	27847	A
XB	54	L.H.	1	XB	54	27847	A
ZG	54	L.H.	1	ZG	54	27847	A
-- 27848/9 -- PANEL - BODY SIDE LOWER							
XA/B	66	R.H.	1	XA	66	27848	A
XA/B	78	R.H.	1	XA	78	27848	A
XA/B	66	L.H.	1	XA	66	27849	A
XA/B	78	L.H.	1	XA	78	27849	A
-- 27850/1 -- PANEL - BODY SIDE UPPER							
XA/B	78	R.H. - W/o side glass	1	XA	78	27850	A
XA/B	78	R.H. - with back doors & side glass	1	XA	78	27850	BB*
XB	78	R.H. - with liftgate & side glass	1	XB	78	27850	B*
XB	78A	R.H. - with back doors - surfsider - O.S.O.-F-6021	1	XB	78	27850	AAOSO*
XB	78A	R.H. - with liftgate - surfsider - O.S.O. -F-6021	1	XB	78	27850	BAOSO*
XA/B	78	L.H. - W/o side glass	1	XA	78	27851	A
XA/B	78	L.H. - with back doors & side glass	1	XA	78	27851	BB*
XB	78	L.H. - with liftgate & side glass	1	XB	78	27851	B*
XB	78A	L.H. - with back doors - surfsider - O.S.O.-F-6021	1	XB	78	27851	AAOSO*
XB	78A	L.H. - with liftgate - surfsider - O.S.O.-F-6021	1	XB	78	27851	BAOSO*
-- 278A52/3 -- PANEL - BODY SIDE LOWER EXT.							
XA/B	66	R.H.	1	XA	66	278A52	A
XA/B	78	R.H. - with back doors	1	XA	78	278A52	A
XB	78	R.H. - with liftgate	1	XB	78	278A52	A
XA/B	66	L.H.	1	XA	66	278A53	A
XA/B	78	L.H. - with back doors	1	XA	78	278A53	A
XB	78	L.H. - with liftgate	1	XB	78	278A53	A
-- 278D52/3 -- BEZEL - QTR. PANEL AIR SCOOP							
XB	65H	R.H. - paint to suit	1	XB	65	278D52	AP
XB	65H	L.H. - paint to suit	1	XB	65	278D53	AP
-- 278D54/5 -- GRILLE - QTR. PANEL AIR SCOOP							
XB	65H	R.H. - paint to suit	1	XB	65	278D54	AP
XB	65H	L.H. - paint to suit	1	XB	65	278D55	AP

MODEL	BODY TYPE	REMARKS	UNIT	PART NUMBER
-- 27858/9 -- PANEL – QUARTER INSIDE TO FLOOR PAN				
XA/B	66, 78	R.H.	1	XA 66 27858 A
XA/B	71	R.H.	1	XA 71 27858 A
XA/B	66, 78	L.H.	1	XA 66 27859 A
XA/B	71	L.H. – to 12/74	1	XA 71 27859 A
XB	71	L.H. – from 12/74	1	XB 71 27859 A*
XA/B	71	Grommet – floor pan	2	357042 S
-- 278A62/3 -- PANEL – BODY SIDE LOWER INNER ACCESS.				
XA/B	66, 78	R.H.	1	XA 66 278A62 A
XA/B	66, 78	L.H.	1	XA 66 278A63 A
-- 27870/1 -- PANEL ASSY. – QTR. WINDOW REGULATOR				
XA/B	65	R.H.	1	XA 65 27870 A
XA/B	65	L.H.	1	XA 65 27871 A
-- 278A72/3 -- BRACKET – TONNEAU SUPPORT REAR				
XA/B	66, 78	R.H.	1	XA 66 278A72 A
XA/B	66, 78	L.H.	1	XA 66 278A73 A
-- 27886/7 -- PANEL – QUARTER WHEEL HOUSE INNER				
XA/B	54, 65	R.H.	1	XA 54 27886 A
XA/B	71	R.H.	1	XA 71 27886 A
XA/B	66, 78	R.H.	1	XA 66 27886 A
ZF/G	54	R.H.	1	ZF 54 27886 A
XA/B	54, 65	L.H.	1	XA 54 27887 A
XA/B	71	L.H.	1	XA 71 27887 A
XA/B	66, 78	L.H.	1	XA 66 27887 A
ZF/G	54	L.H.	1	ZF 54 27887 A
-- 278A86 -- REINFORCEMENT ASSY. – BODY SIDE UPPER				
XA/B	78		4	XA 78 278A86 A
-- 27894/5 -- PANEL – QUARTER WHEEL HOUSE OUTER				
XA/B	54	R.H.	1	XA 54 27894 A
XA/B	65	R.H.	1	XA 65 27894 A
XA/B	71	R.H.	1	XA 71 27894 A
XA/B, ZF/G	54E,G, 66, 78	R.H.	1	ZF 54 27894 A
XA/B	54	L.H.	1	XA 54 27895 A
XA/B	65	L.H.	1	XA 65 27895 A
XA/B	71	L.H.	1	XA 71 27895 A
XA/B, ZF/G	54E,G, 66, 78	L.H.	1	ZF 54 27895 A
XA/B, ZF/G	All	Plug button – .50" dia. – to seal holes in panel	2	115300 ES
-- 27906 -- PANEL – VENT BOX				
XA/B	78		6	XA 78 27906 A
-- 27907 -- GRILLE – VENT BOX – BODY SIDE UPPER				
XA/B	78		6	XA 78 27907 AA
-- 27970/1 -- REINFORCEMENT – REAR LAMP OPENING				
XA/B	66, 71, 78	R.H.	1	XA 71 27970 A
XA/B	66, 71, 78	L.H.	1	XA 71 27971 A
-- 280B10/1 -- GRILLE – QTR. VENT AIR				
XA/B	66	R.H.	1	XA 66 280B10 A
XA/B	66	L.H.	1	XA 66 280B11 A
-- 28050/1 -- REINFORCEMENT – BODY SIDE UPPER REAR				
XA/B	78	R.H. – with side windows	1	XA 78 28050 A
XA/B	78	L.H. – with side windows	1	XA 78 28051 A
-- 280A55 -- PANEL – BODY SIDE INNER L.H.				
XB	66	From 12/74	1	XB 66 280A55 A*
XB	78	From 12/74	1	XB 78 280A55 A*

MODEL	BODY TYPE	REMARKS	UNIT	PART NUMBER
– – 28058/9 – – EXTENSION – QUARTER PANEL REAR (REFER ALSO 278A52)				
XA	54	R.H.	1	XA 54 28058 A
XA/B	65	R.H.	1	XA 65 28058 A
XA/B	71	R.H.	1	XA 71 28058 A
ZF/G	54	R.H.	1	ZF 54 28058 A
XB	54	R.H.	1	XB 54 28058 A
XA	54	L.H.	1	XA 54 28059 A
XA/B	65	L.H.	1	XA 65 28059 A
XA/B	71	L.H.	1	XA 71 28059 A
ZF/G	54	L.H.	1	ZF 54 28059 A
XB	54	L.H.	1	XB 54 28059 A
– – 28060/1 – – FILLER – QUARTER PANEL UPPER FRONT				
XA/B	65	R.H.	1	XA 65 28060 A
XA/B	65	L.H.	1	XA 65 28061 A
– – 280B62 – – GRILLE ASSY. – QTR. VENT AIR				
XA/B, ZF/G	All		2	XA 54 280B62 A
– – 28072/3 – – EXTENSION – QTR. PANEL UPPER REAR				
XA/B	65	R.H.	1	XA 65 28072 A
XA/B	65	L.H.	1	XA 65 28073 A
– – 280A94 – – SHIELD – QTR. PANEL TO BUMPER END				
XA/B, ZF/G	54, 65		2	XA 54 280A94 A
XB	54		2	XB 54 280A94 A
– – 280B94/5 – – PLATE – QTR. PANEL TO BUMPER END SHIELD ATTACHING				
XA, ZF	54, 65	R.H.	1	XA 54 280B94 B
XB	54	R.H.	1	XB 54 280B94 A
XA, ZF	54, 65	L.H.	1	XA 54 280B95 B
XB	54	L.H.	1	XB 54 280B95 A
– – 28160/1 – – PILLAR ASSY. – QUARTER LOCK				
XA/B, ZF/G	54	R.H. – with air vent – to 1/74	1	XA 54 28160 B
XB, ZG	54	R.H. – without air vent – from 1/74	1	XB 54 28160 A*
XA/B	65	R.H. – with air vent – to 1/74	1	XA 65 28160 B
XB	65	R.H. – without air vent – from 1/74	1	XB 65 28160 A*
XA/B	71	R.H. – with air vent – to 1/74	1	XA 71 28160 B
XB	71	R.H. – without air vent – from 1/74	1	XB 71 28160 A*
XB, ZG	54	L.H. – with air vent – to 1/74	1	XA 54 28161 B
XB, ZG	54	L.H. – without air vent – from 1/74	1	XB 54 28161 A*
XA/B	65	L.H. – with air vent – to 1/74	1	XA 65 28161 B
XB	65	L.H. – without air vent – from 1/74	1	XB 65 28161 A*
XA/B	71	L.H. – with air vent – to 1/74	1	XA 71 28161 B
XB	71	L.H. – without air vent – from 1/74	1	XB 71 28161 A*
– – 28182/3 – – SEAL ASSY. – QTR. LOCK PILLAR				
XA	65	R.H.	1	XA 65 28182 A
XB	65	R.H.	1	XB 65 28182 A
XA	65	L.H.	1	XA 65 28183 A
XB	65	L.H.	1	XB 65 28183 A
– – 28216/7 – – REINFORCEMENT – QUARTER PANEL LOCK SIDE LOWER				
XA/B	54	R.H.	1	XA 54 28216 A
XA/B	65	R.H.	1	XA 65 28216 A
XA/B	66, 78	R.H.	1	XA 66 28216 A
XA/B, ZF/G	54E,G, 71	R.H.	1	ZF 54 28216 A
XA/B	54	L.H.	1	XA 54 28217 A
XA/B	65	L.H.	1	XA 65 28217 A
XA/B	66, 78	L.H.	1	XA 66 28217 A
XA/B, ZF/G	54E,G, 71	L.H.	1	ZF 54 28217 A
– – 28230 – – EXTENSION – QUARTER WHEEL HOUSE TO ROOF OUTER PILLAR				
XA/B	71	R.H.	1	XA 71 28230 A
XA/B	71	L.H.	1	XA 71 28231 A
– – 28334/5 – – BRACKET – REAR PILLAR TO BELT RAIL				
XA/B	71	R.H.	1	XA 71 28334 A
XA/B	71	L.H.	1	XA 71 28335 A

MODEL	BODY TYPE	REMARKS	UNIT	PART NUMBER
– – 284A80/1 – – REINFORCEMENT – QTR. PANEL TO ROOF SIDE RAIL				
XA/B	65	R.H.	1	XA 65 284A80 A
XA/B	65	L.H.	1	XA 65 284A81 A
– – 28649 – – MOULDING – QUARTER PANEL FUEL FILLER OPENING				
XA/B	54H, 65H		1	XA 54 28649 A
XA/B	54H, 65H	Nut – moulding to body	4	373888 S35
– – 28714/5 – – RAIL – QUARTER BELT				
XA/B	71	R.H. – W/o aux. rear seat – to 1/75	1	XA 71 28714 A
XB	71	R.H. – W/o aux. rear seat – from 1/75	1	XB 71 28714 BA*
XB	71	R.H. – with aux. rear seat	1	XB 71 28714 A
XA/B	71	L.H. – to 1/75	1	XA 71 28715 A
XB	71	L.H. – from 1/75	1	XB 71 28715 BA*
– – 28795 – – RETAINER – TONNEAU BOW				
XA/B	66		2	ARC6DB 66 28795 A
– – 290B02/3 – – MOULDING – QTR. PANEL O/SIDE REAR END				
XB	54B,C,D	R.H.	1	XB 54 290B02 A
XB	54B,C,D	L.H.	1	XB 54 290B03 A
XB	54B,C,D	Fastener – .125 x 12 – used to attach 290B02/3 to qtr. panel	9	382685 S
XB	54B,C,D	Nut – nylon dome – 8 – 32 – attach moulding to quarter panel	a/r	V 388472*
– – 29024 – – REFER SOFT TRIM SECTION				
– – 29034/5 – – MOULDING – QTR. WINDOW OUTSIDE BELT				
XA/B	65D,H	R.H.	1	XA 65 29034 A
XB	71D	R.H.	1	XB 71 29034 A*
XA/B	65D,H	L.H.	1	XA 65 29035 A
XB	71D	L.H.	1	XB 71 29035 A*
– – 290A60/1 – – MOULDING – QUARTER WINDOW OUTSIDE UPPER				
XA/B	71A,B	R.H.	1	XA 71 290A60 A
XA/B	71D	R.H.	1	XA 71 290A60 B
XA/B	71A,B	L.H.	1	XA 71 290A61 A
XA/B	71D	L.H.	1	XA 71 290A61 B
– – 29066/7 – – MOULDING ASSY. – QUARTER PANEL OUTSIDE (REFER 29300 FOR ATTACHING KIT)				
XA	54	R.H. – black	1	XA 54 29066 AA1A
XB	54	R.H. – black	1	XB 54 29066 AA1A
XA/B	65	R.H. – black	1	XA 65 29066 AA1A
XA/B	71	R.H. – black	1	XA 71 29066 AA1A
XA/B	66, 78	R.H. – black	1	XA 66 29066 AA1A
ZF/G	All	R.H. – black	1	ZF 54 29066 AA1A
XA	54	L.H. – black	1	XA 54 29067 AA1A
XB	54	L.H. – black	1	XB 54 29067 AA1A
XB	65	L.H. – black	1	XA 65 29067 AA1A
XA/B	71	L.H. – black	1	XA 71 29067 AA1A
XA/B	66, 78	L.H. – black	1	XA 66 29067 AA1A
ZF/G	All	L.H. – black	1	ZF 54 29067 AA1A
– – 290A66/7 – – MOULDING – QUARTER WINDOW OUTSIDE FRONT				
XA/B	71A,B,	R.H.	1	XA 71 290A66 A
XA/B	71D	R.H.	1	XA 71 290A66 B
XA/B	71A,B	L.H.	1	XA 71 290A67 A
XA/B	71D	L.H.	1	XA 71 290A67 B
– – 29078/9 – – MOULDING – QUARTER PANEL REAR EXTENSION				
XB	54B,C,D	R.H.	1	XB 54 29078 A
XB	54B,C,D	L.H.	1	XB 54 29079 A
XB	54B,C,D	Nut – nylon dome – 8 – 32 – attach moulding to quarter panel extension	a/r	V 388472*
– – 29118 – – RETAINER – QUARTER PANEL MOULDING				
ZF/G	All		2	ZF 54 29118 A
– – 29120 – – RETAINER ASSY. – QUARTER OUTSIDE MOULDING				
XA/B	54B,C,D,H		10	C50Z 62 29120 A

MODEL	BODY TYPE	REMARKS	UNIT	PART NUMBER
– – 291A30/1 – – CAP – PILLAR QTR. UPPER				
XA/B	71	R.H. – paint to suit	1	XA 71 291A30 AP
XA/B	65	R.H. – rework to fit interior front pillar cover	1	XA 71 291A30 AP
XA/B	71	L.H. – paint to suit	1	XA 71 291A31 AP
XA/B	65	L.H. – rework to fit interior front pillar cover	1	XA 71 291A31 AP
– – 291B30 – – BADGE – "500" (REFER 29300 FOR ATTACHING KIT)				
XA/B	54B, 65B, 66B, 71B, 78B		3	XY 54 291B30 A
ZF/G	54G	Fender & frt. door trim	4	ZF 54 291B30 A
ZG	54G	Luggage compartment door	1	ZG 54 291B30 A
ZF	54G	Nut – 3/32" sleeve – att. 291B30 to 40110	4	378362 S102
XA/B, ZF/G	All	Clip – badge retaining – from 7/73	a/r	V 388431 S
– – 291C52/3 – – STRIPE – QUARTER PANEL – RALLY PACK				
XA	65	R.H. – black	1	XA 65 291C52 A1A
XA	65	R.H. – gold	1	XA 65 291C52 A1G
XA	65	R.H. – silver	1	XA 65 291C52 A1L
XA	65	R.H. – orange	1	XA 65 291C52 A1V
XB	54	R.H. – black	1	XB 54 291C52 AA1A
XB	54	R.H. – gold	1	XB 54 291C52 AA1G
XB	54	R.H. – silver	1	XB 54 291C52 AA1L
XB	54	R.H. – orange	1	XB 54 291C52 AA1V
XB	65	R.H. – black	1	XB 65 291C52 AA1A
XB	65	R.H. – gold	1	XB 65 291C52 AA1G
XB	65	R.H. – silver	1	XB 65 291C52 AA1L
XB	65	R.H. – orange	1	XB 65 291C52 AA1V
XB	66, 78	R.H. – black	1	XB 66 291C52 AA1A
XB	66, 78	R.H. – gold	1	XB 66 291C52 AA1G
XB	66, 78	R.H. – silver	1	XB 66 291C52 AA1L
XB	66, 78	R.H. – orange	1	XB 66 291C52 AA1V
XB	71	R.H. – black	1	XB 71 291C52 AA1A
XB	71	R.H. – gold	1	XB 71 291C52 AA1G
XB	71	R.H. – silver	1	XB 71 291C52 AA1L
XB	71	R.H. – orange	1	XB 71 291C52 AA1V
XA	65	L.H. – black	1	XA 65 291C53 A1A
XA	65	L.H. – gold	1	XA 65 291C53 A1G
XA	65	L.H. – silver	1	XA 65 291C53 A1L
XA	65	L.H. – orange	1	XA 65 291C53 A1V
XB	54	L.H. – black	1	XB 54 291C53 AA1A
XB	54	L.H. – gold	1	XB 54 291C53 AA1G
XB	54	L.H. – silver	1	XB 54 291C53 AA1L
XB	54	L.H. – orange	1	XB 54 291C53 AA1V
XB	65	L.H. – black	1	XB 65 291C53 AA1A
XB	65	L.H. – gold	1	XB 65 291C53 AA1G
XB	65	L.H. – silver	1	XB 65 291C53 AA1L
XB	65	L.H. – orange	1	XB 65 291C53 AA1V
XB	66, 78	L.H. – black	1	XB 66 291C53 AA1A
XB	66, 78	L.H. – gold	1	XB 66 291C53 AA1G
XB	66, 78	L.H. – silver	1	XB 66 291C53 AA1L
XB	66, 78	L.H. – orange	1	XB 66 291C53 AA1V
XB	71	L.H. – black	1	XB 71 291C53 AA1A
XB	71	L.H. – gold	1	XB 71 291C53 AA1G
XB	71	L.H. – silver	1	XB 71 291C53 AA1L
XB	71	L.H. – orange	1	XB 71 291C53 AA1V
– – 29164/5 – – MOULDING – QUARTER WHEEL OPENING (REFER 29300 FOR ATTACHING KIT)				
XA/B	54C,D,H	R.H.	1	XA 54 29164 A
XA/B	65D,H	R.H.	1	XA 65 29164 A
XA/B	71D	R.H.	1	XA 71 29164 A
ZF/G	54G	R.H.	1	ZF 54 29164 A
XA/B	54C,D,H	L.H.	1	XA 54 29165 A
XA/B	65D,H	L.H.	1	XA 65 29165 A
XA/B	71D	L.H.	1	XA 71 29165 A
ZF/G	54G	L.H.	1	ZF 54 29165 A
XA/B, ZF/G	All	Screw – No. 8 – 18 x .38" – moulding to body	a/r	379560 S
– – 29174 – – STRIPE – BODY SIDE				
XB	54B, 71B	'Sovereign' – black – serviced in units of one foot	a/r	XB 54 29174 AA1A*
XB	54B, 71B	'Sovereign' – gold – serviced in units of one foot	a/r	XB 54 29174 AA1G*
XB	54B, 71B	'Sovereign' – silver – serviced in units of one foot	a/r	XB 54 29174 AA1L*

MODEL	BODY TYPE	REMARKS	UNIT	PART NUMBER			
– – 29232 – – RETAINER – COAT HOOK							
XA/B, ZF/G	All		2	C8AZ	62	29232	A
– – 29244 – – FILLER – QUARTER WINDOW							
XA/B	65	Moulding to w/strip retainer	2	XA	65	29244	AA
– – 29300 – – KIT HARDWARE MOULDING RETAINING							
XA/B	65D,H	Consists (6) XA-65-20818-A, (6) 379650-S, (1) XA-65-20908-A, (1) V-387725-S7 – use with mouldings XA-65-20934/5-A	a/r	XA	65	29300	A
XA/B, ZF/G	All	Consists (8) ZC-54-254A46-A ret., (1) ZC-54-21094-A, ret., (1) V-387725-S7 nut – use with mouldings XA-16B068/9-AA1A, XA-65-20780/1-AA1A, XA-54-29066/7-AA1A, ZF-54-29066/7-AA1A, XA-66-29066/7-AA1A, XA-71-29066/7-AA1A	a/r	XA	54	29300	B
XA/B, ZF/G	All	Consists (8) XA-16A746-A ret., (8) 55730-S36 nut, (8) AR-387281-S ret., – use with mouldings XA-16164/5-A, XA-16856-A, ZF-16856-A	a/r	XA	54	29300	C
XA/B, ZF/G	All	Consists (3) 373888-S35 nut, (3) 375890-S102 sleeve, – use with mouldings XA-16237-AA/BA/CA/CB/DA, XY-54-291B30-A, XA-54-42528-A, XA-54-40282-A/B/C/D, XA-65-403E32/3-A	a/r	XA	54	29300	D
XA/B, ZF/G	All	Consists (7) XW-54-10182-A ret., (1) XW-54-10198-A ret., (1) 372531-S100 nut, (1) 53037-S42 screw – use with mouldings XA-54-10176/7-A, XA-71-10176/7-A	a/r	XA	54	29300	F
XA/B, ZF/G	All	Consists (7) ZF-54-10182-A ret., (6) 379560-S nut – use with mouldings ZF-54-10176/7-A, XA-54-24458/9-A, XA-54-29164/5-A, ZF-54-29164/5-A, XA-65-29164/5-A, XA-71-29164/5-A	a/r	XA	54	29300	G
XA/B	All	Consists (3) ZC-54-254A46-B ret., (2) ZC-54-21094-A ret., (2) V-387725-S7 nut – use with mouldings XA-54-20780/1-AA1A, XA-54-254A16-AA1A, XA-65-29066/7-AA1A	a/r	XA	54	29300	H
XA/B	All	Consists (2) C50Z-62-29120-A ret., (2) 372531-S100 nut, (6) XT-54-254A46-A ret., – use with mouldings XA-54-29368/9-A, XA-54-42512-A	a/r	XA	54	29300	J
XA/B, ZF/G	All	Consists (2) XW-54-423A04-A ret., (2) 372351-S100 nut, (4) XA-54-40248-A ret., (4) XA-54-40056-A stud – use with mouldings XA-65-423A20/1-A, XA-54-423A22/3-A, ZF-54-423A22/3-AD, XA-65-423A22/3-A, XA-54-423B48/9-A, ZF-54-423B48/9-A	a/r	XA	54	29300	L
XA/B	All	Consists (2) C9AZ-62-40248-B ret., (2) 372531-S100 nut, (4) XW-54-10182-A ret., – use with moulding XA-71-423A46-A	a/r	XA	54	29300	M
ZF/G	All	Consists (2) 379560-S screw, (1) 53037-S42 – use with moulding ZF-54-10178/9-A	a/r	ZF	54	29300	B
ZF/G	All	Consists (1) ZF-54-29118-A ret., (1) 372531-S100 nut, (1) 379560-S screw – use with moulding ZF-54-29368/9-A	a/r	ZF	54	29300	D
ZF/G	All	Consists (6) ZF-54-10198-A ret., (6) 372531-S100 nut – use with moulding ZF-54-42512-A	a/r	ZF	54	29300	E
ZF/G	54G	Consists (5) ZF-54-25446-A, (5) 379560-S, (2) ZF-54-25446-B – use with mouldings ZF-54-209A34/5-A, ZF-54-255A54/5-A	a/r	ZF	54	29300	F
– – 29368/9 – – MOULDING – QTR. PANEL LOWER REAR EXTENSION (REFER 29300 FOR ATTACHING KIT)							
XA	54B,C,D,H	R.H.	1	XA	54	29368	A
ZF/G	All	R.H.	1	ZF	54	29368	A
XA	71D	R.H.	1	XA	71	29368	A
XA	54B,C,D,H	L.H.	1	XA	54	29369	A
ZF/G	All	L.H.	1	ZF	54	29369	A
XA	71D	L.H.	1	XA	71	29369	A
XA/B, ZF/G	All	Screw – No. 8 – 18 x .38" – moulding to body	a/r	379560 S			
XA/B, ZF/G	All	Nut – No. 10 – 24 – moulding to qtr. extn.	a/r	353911 S100			
– – 29700/1 – – GLASS AND FRAME ASSY. – BODYSIDE							
XB	78A	R.H. – surfsider – O.S.O.-F-6021	1	XB	78	29700	AAOSO*
XB	78A	L.H. – surfsider – O.S.O.-F-6021	1	XB	78	29701	AAOSO*

MODEL	BODY TYPE	REMARKS	UNIT	PART NUMBER
– – 29710/1 – – GLASS – QUARTER WINDOW				
XA/B	65	R.H. – clear	1	XA 65 29710 A
XA/B	65	R.H. – tinted	1	XA 65 29710 B
XA/B	71	R.H. – clear	1	XA 71 29710 A
XA/B	71	R.H. – tinted	1	XA 71 29710 B
XA/B	65	L.H. – clear	1	XA 65 29711 A
XA/B	65	L.H. – tinted	1	XA 65 29711 B
XA/B	71	L.H. – clear	1	XA 71 29711 A
XA/B	71	L.H. – tinted	1	XA 71 29711 B
– – 297K26 – – GLASS – BODY SIDE FIXED WINDOW REAR				
XA/B	78		2	XA 78 297K26 A
– – 29730 – – WEATHERSTRIP ASSY. – QTR. WINDOW GLASS INNER AT BELT				
XA/B	65B	R.H.	1	XA 65 29730 B
XA/B	65D,H	R.H.	1	XA 65 29730 A
XA/B	65B	L.H.	1	XA 65 29731 B
XA/B	65D,H	L.H.	1	XA 65 29731 A
– – 29732/3 – – WEATHERSTRIP ASSY. – QTR. WINDOW GLASS OUTER				
XA/B	65	R.H.	1	XA 65 29732 A
XA/B	65	L.H.	1	XA 65 29733 A
XA/B	65	Screw – No. 8 – 15 x 5/8" – w/strip to qtr. panel	8	52017 S2
– – 29752/3 – – GUIDE ASSY. – QTR. WINDOW				
XA/B	65	R.H.	1	XA 65 29752 A
XA/B	65	L.H.	1	XA 65 29753 A
– – 29790 – – SUPPORT ASSY. – QTR. WINDOW GUIDE LOWER				
XA/B	65		2	XA 65 29790 A
– – 29796 – – MOULDING – QTR. WINDOW OUTSIDE				
XA/B	65B	R.H.	1	XA 65 29796 A
XA/B	65D,H	R.H.	1	XA 65 29796 B
XA/B	65B	L.H.	1	XA 65 29797 A
XA/B	65D,H	L.H.	1	XA 65 29797 B
– – 298A04 – – RETAINER – QTR. WINDOW GUIDE ROLLER				
XA/B	65		6	XA 65 298A04 A
– – 29805 – – STOP ASSY. – QTR. WINDOW LOWER				
XA/B	65		2	XA 65 29805 A
– – 29824 – – ROLLER – QTR. WINDOW GUIDE				
XA/B	65		6	XA 65 29824 A
– – 298A56 – – BRACKET ASSY. – QTR. WINDOW GUIDE LOWER				
XA/B	65		2	XA 65 298A56 A
– – 29904/5 – – WEATHERSTRIP – QUARTER WINDOW STATIONARY GLASS				
XA/B	71	R.H.	1	XA 71 29904 A
XA/B	71	L.H.	1	XA 71 29905 A
XA/B	78		4	XA 78 29904 AA
– – 299A04 – – WEATHERSTRIP INSERT – BODYSIDE FIXED GLASS				
XA/B	78		4	XA 78 299A04 AA
– – 29952/3 – – RETAINER – QTR. WINDOW FRONT WEATHERSTRIP				
XA/B	65	R.H.	1	XA 65 29952 A
XA/B	65	L.H.	1	XA 65 29953 A
– – 30146/7 – – WEATHERSTRIP – QTR. WINDOW FRONT				
XA/B	65	R.H.	1	XA 65 30146 A
XA/B	65	L.H.	1	XA 65 30147 A
– – 30306/7 – – REGULATOR – QTR. WINDOW				
XA/B	65	R.H. – manual	1	XA 65 30306 A
XA/B	65	L.H. – manual	1	XA 65 30307 A
– – 30322 – – HANDLE ASSY. – QUARTER WINDOW REGULATOR				
XA/B	65		2	XA 65 30322 A

MODEL	BODY TYPE	REMARKS	UNIT	PART NUMBER			
– – 30351 – – SPRING – WINDOW REGULATOR COUNTER BALANCE							
XA/B, ZF/G	54, 71	Front & rear – with power windows	4	C9ZZ	65	30351	A
XA/B	65	Rear – manual & power windows	2	XA	65	30351	A
– – 30380/1 – – REGULATOR – QTR. WINDOW LESS MOTOR & DRIVE							
XA/B	65	R.H. – electric	1	XA	65	30380	A
XA/B	65	L.H. – electric	1	XA	65	30381	A
– – 303A90/1 – – BRACKET – QTR. REGULATOR MOTOR MTG.							
XA/B	65	R.H. – for electric window – use R.H. part on L.H. side & L.H. part on R.H. side	2	XA	65	303A90	A
XA/B	65	L.H. – for electric window – use R.H. part on L.H. side & L.H. part on R.H. side	2	XA	65	303A91	A
– – 30484/5 – – EXTENSION – QTR. WINDOW REGULATOR PANEL TO FLOOR							
XA/B	65	R.H.	1	XA	65	30484	A
XA/B	65	L.H.	1	XA	65	30485	A
– – 305A02/3 – – BRACKET – QTR. GLASS WINDOW							
XA/B	65	R.H. – to 7/74	1	XA	65	305A02	A
XB	65	R.H. – from 7/74	1	XB	65	305A02	A*
XA/B	65	L.H. – to 7/74	1	XA	65	305A03	A
XB	65	L.H. – from 7/74	1	XB	65	305A03	A*
XB	65	Used to attach XB-65-305A02/3-A – from 7/74	3	XB	65	30516	A*
– – 30516 – – SPACER ASSY. – QTR. WINDOW GLASS BRACKET (REFER 305A02/3)							
– – 31002/3 – – PANEL ASSY. – QUARTER TRIM UPPER							
XB	78B	R.H.	1	XB	78	31002	AA1P*
XB	78B	L.H.	1	XB	78	31003	AA1P*
– – 31012/3 – – REFER SOFT TRIM SECTION							
– – 310A12/3 – – REFER SOFT TRIM SECTION							
– – 31016/7 – – REFER SOFT TRIM SECTION							
– – 310A64/5 – – REFER SOFT TRIM SECTION							
– – 31112/3 – – REFER SOFT TRIM SECTION							
– – 31136/7 – – REFER SOFT TRIM SECTION							
– – 31148/9 – – REFER SOFT TRIM SECTION							
– – 31218 – – REINFORCEMENT – QTR. TRIM PANEL							
XA, ZF	54E,G, 65	To 3/73 – also Malaysia	2	ZF	54	31218	A
– – 32226 – – BRACKET – BODYSIDE TOP							
XB	66, 71, 78	From 12/74	1	XB	71	32226	A*

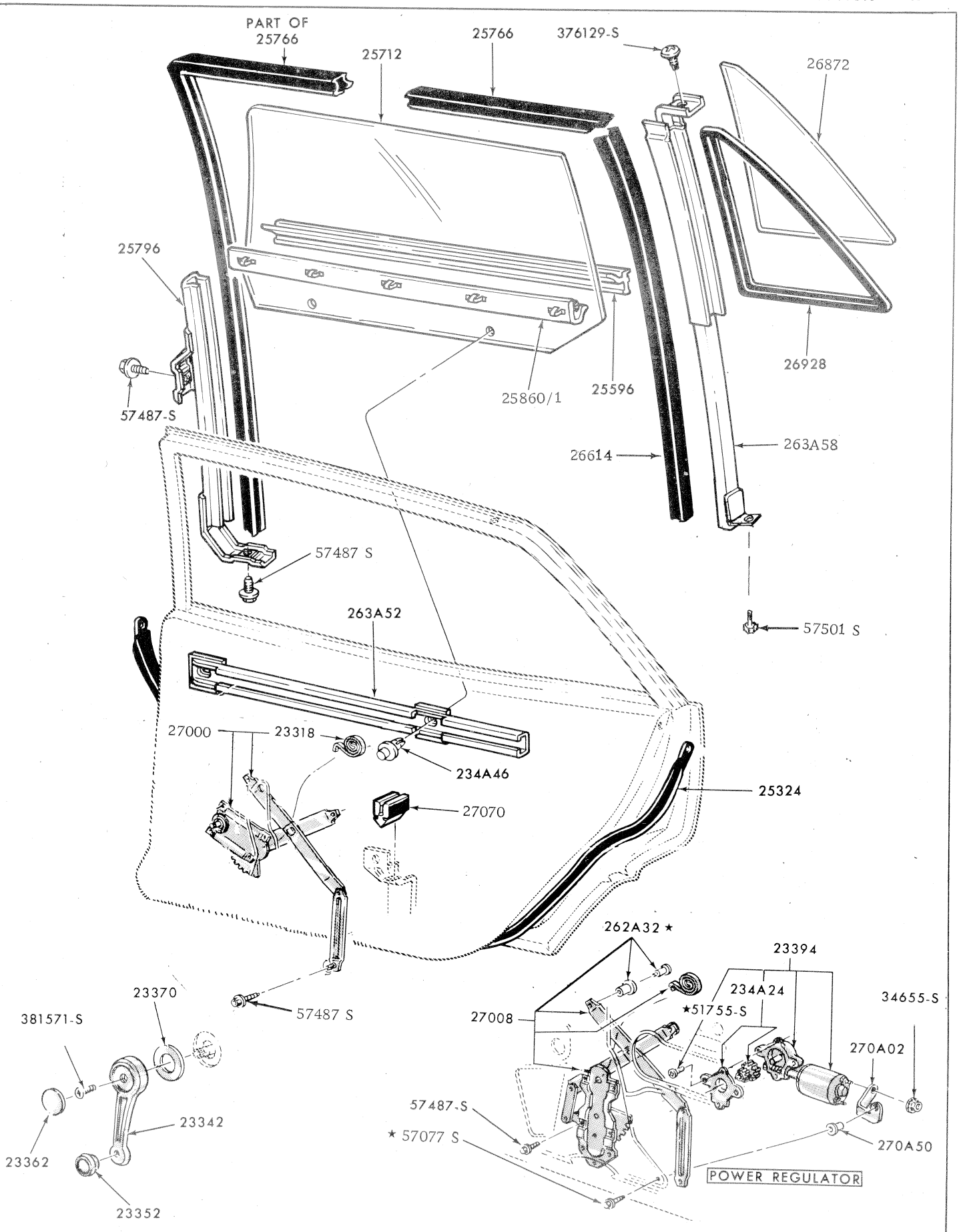

REAR DOOR MECHANISM 54 71

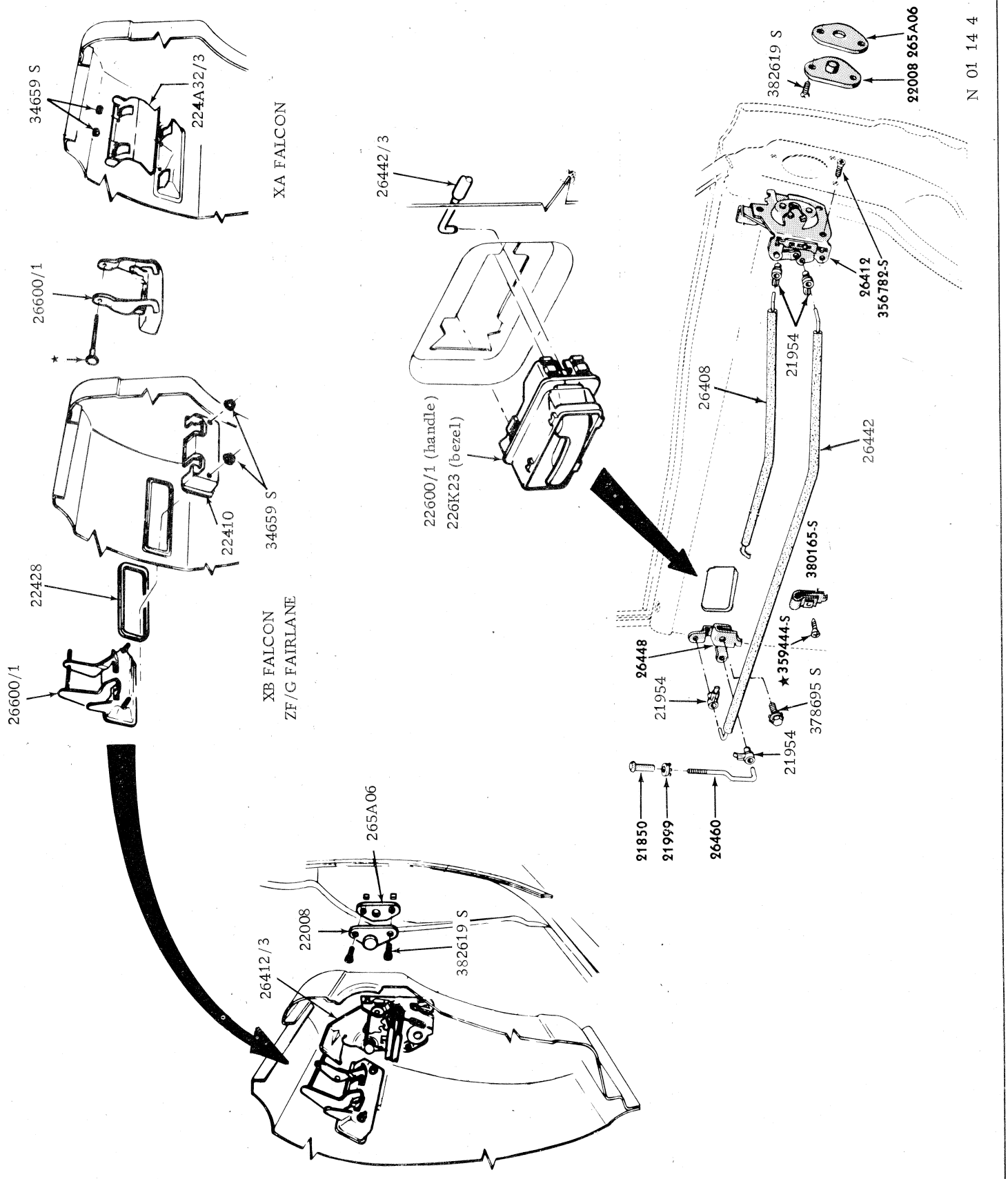

TYPICAL REAR DOOR HANDLES AND LOCK MECHANISM

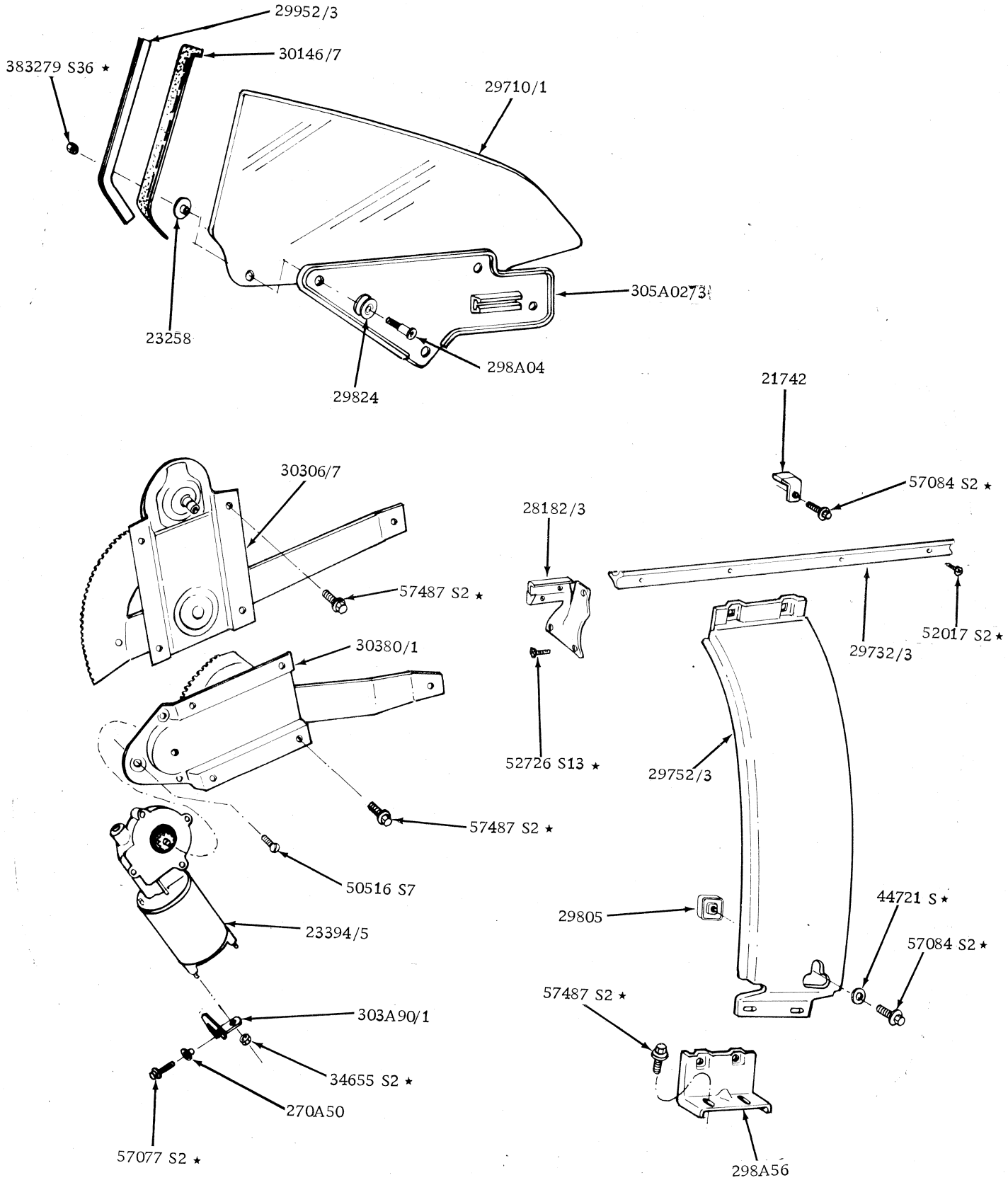

REAR QUARTER WINDOW AND RELATED PARTS BODY TYPE 65

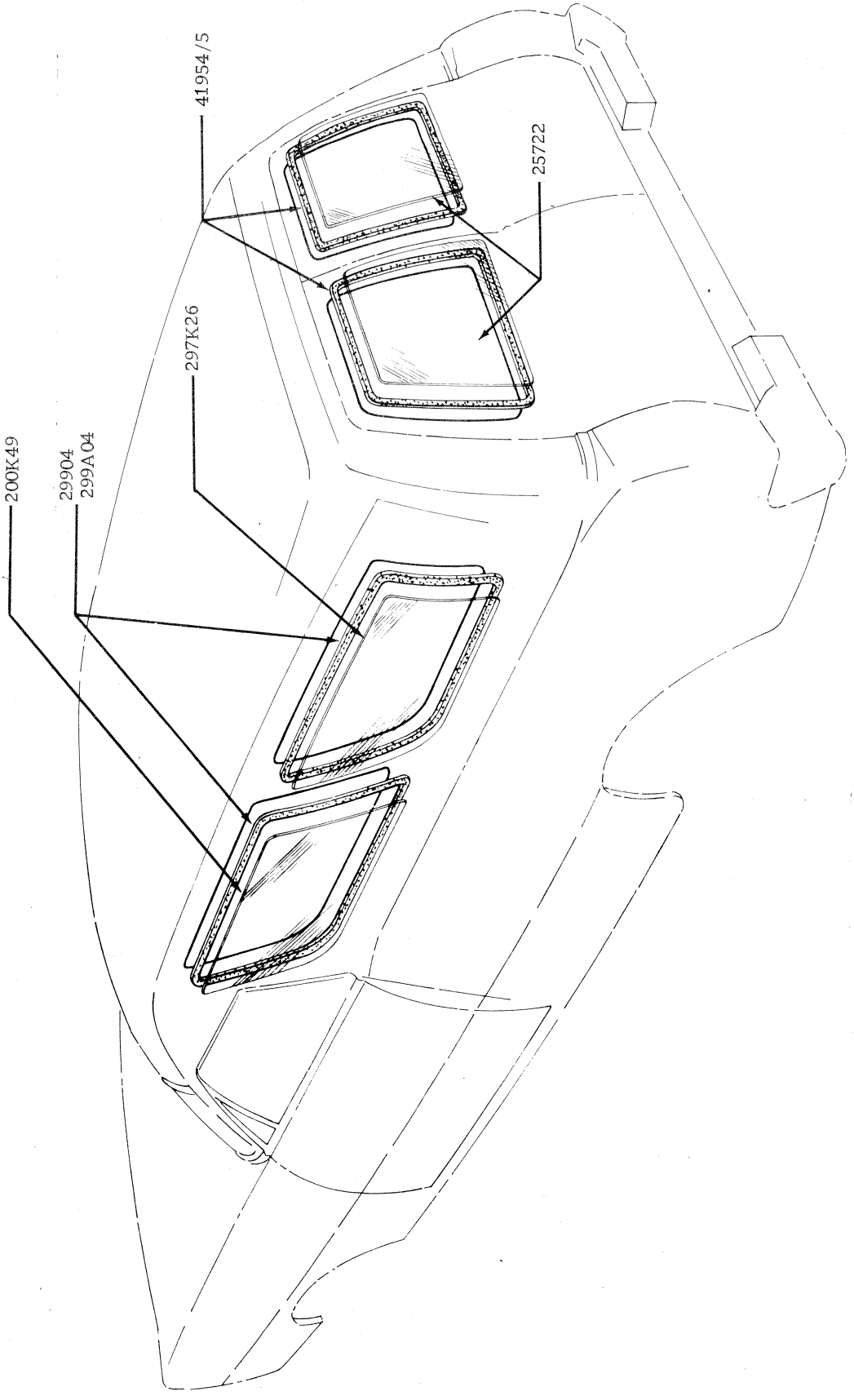

REAR WINDOWS - BODY TYPE 78

MODEL	BODY TYPE	REMARKS	UNIT	PART NUMBER
– – 40012/3 – – BACK DOOR ASSY. – LESS HINGES				
XA	78	R.H. – O.R.C. (1) XB 78 40012 A, (1) XA 78 25324 B	1	XA 78 40012 A
XB	78	R.H.	1	XB 78 40012 A
XA/B	78	L.H.	1	XA 78 40013 A
XA/B	78	Screw & washer – 5/16" – 18 x 1.00" – door assy. to body	4	379283 S2
– – 400A13 – – WASHER – LIFTGATE RELEASE				
XB	78		1	ARC6DB 78 400A13 A
– – 40056 – – STUD – ANCHOR				
XA/B, ZF/G	54, 65	Att. 423A22/3, 423A20/1, 423B48/9	12	XA 54 40056 A
– – 40104 – – MOULDING – LUGGAGE COMPT. DOOR – LOWER				
XB	54B,C,D,		1	XB 54 40104 A
XB	54B,C,D,	Fastener – .125 x 12 – used to attach 40104 to luggage compt. door	9	382685 S
– – 40108/9 – – MOULDING – LUGGAGE COMPT. DOOR LOWER END				
XB	54B,C,D,	R.H.	1	XB 54 40108 A
XB	54B,C,D	L.H.	1	XB 54 40109 A
XB	54B,C,D,	Fastener – .125 x 12 – used to attach 40108/9 to luggage compt. door	9	382685 S
XB	54B,C,D,	Nut – nylon dome – 8 – 32 – attach moulding to luggage compt. door	a/r	V 388472*
– – 40110 – – DOOR ASSY. – LUGGAGE COMPARTMENT				
XA	54		1	XA 54 40110 A
XB	54		1	XB 54 40110 A
XA/B	65		1	XA 65 40110 A
ZF	All		1	ZF 54 40110 A
ZG	All		1	ZG 54 40110 A
– – 402A06 – – RETAINER – TAILGATE OPENING LOWER WEATHERSTRIP				
XA/B	66, 78		1	XA 66 402A06 AA
XA/B	66, 78	Screw – No. 8 retainer to body – O.N.R.	9	52726 S40
– – 40222 – – RETAINER ASSY. – MOULDING TAILGATE OUTSIDE AT BELT				
XA/B	71		5	XA 71 40222 A
– – 40248 – – RETAINER – BACK BELT SIDE MOULDING				
XA/B, ZF/G	54, 65	Att. 423A22/3, 423B48/9, 423A20/1	12	XA 54 40248 A
XA/B	71		4	C9AZ 62 40248 B
– – 40282 – – LETTER – BOOT (REFER 29300 FOR ATTACHING KIT)				
XA/B, ZG	54	"F"	1	XA 54 40282 A
XA/B, ZG	54	"O"	1	XA 54 40282 B
XA/B, ZG	54	"R"	1	XA 54 40282 C
XA/B, ZG	54	"D"	1	XA 54 40282 D
– – 403F00/1 – – BRACKET ASSY. – SEAT BELT MOUNTING				
XB	66, 78	R.H.	1	XB 66 403F00 A*
XB	66, 78	L.H.	1	XB 66 403F01 A*
– – 40310 – – PANEL ASSY. – UPPER BACK & PACKAGE TRAY				
XA/B	54	To 9/74	1	XA 54 40310 A
XB	54	From 9/74	1	XB 54 40310 A*
XA/B	65	To 9/74	1	XA 65 40310 A
XB	65	From 9/74	1	XB 65 40310 A*
ZF/G	54	To 9/74	1	ZF 54 40310 A
ZG	54	From 9/74	1	ZG 54 40310 A*
– – 40323 – – PANEL ASSY. – BULKHEAD LOWER				
XA/B	66, 78	To 12/74	1	XA 66 40323 A
XB	66, 78	From 12/74	1	XB 66 40323 A*
– – 40324 – – PANEL – LOWER BACK				
XA/B	54		1	XA 54 40324 A
XA/B	65		1	XA 65 40324 A
XA/B	66, 78		1	XA 66 40324 A
ZF/G	54		1	ZF 54 40324 A

MODEL	BODY TYPE	REMARKS	UNIT	PART NUMBER
– – 40328 – – PANEL – BULKHEAD UPPER				
XB	54A,B,C,D	With luggage compartment anti-theft partition	1	XB 54 40328 AOSO*
XA/B	66		1	XA 66 40328 A
XA/B	78		1	XA 78 40328 A
– – 40328 – – PANEL – FUEL FILLER INNER				
ZF/G	All	To 12/74	1	ZF 54 40328 A
ZG	All	From 12/74	1	ZG 54 40328 A*
– – 40330 – – EXTENSION – LOWER BACK PANEL				
XA/B, ZF/G	All exc. 54H, 65H	Single exhaust	1	XA 54 40330 B
XA/B, ZF/G	All exc. 54H, 65H	Dual exhaust	1	XA 54 40330 C
XA/B	54H, 65H		1	XA 65 40330 A
XA/B, ZF/G	All exc. 54H, 65H	For use with separate back up lights (Japan) – O.N.R.	1	72DA 54 40330 AOSO
– – 403A70 – – MOULDING – TAILGATE OUTSIDE BELT				
XA/B	71		1	XA 71 403A70 A
XA/B	71	Nut – No. 10 – 24 – moulding to tailgate	5	55731 S40
– – 403A96 – – PLATE – BACK DOOR HINGE ANCHOR				
XA/B	78		1	XA 78 403A96 A
– – 403A97 – – PLATE – HINGE ANCHOR BACK DOOR LOWER				
XA/B	78		1	XA 78 403A97 B
– – 404A10/1 – – PROP ASSY. – LIFTGATE				
XB	78	R.H.	1	XB 78 404A10 A
XB	78	L.H.	1	XB 78 404A11 A
XB	78	Spacer – liftgate support to liftgate	4	V 388461
XB	78	Screw & washer – 404A10/1 to body	6	379283 S2
– – 40412 – – PANEL ASSY. – LIFTGATE				
XB	78		1	XB 78 40412 A
– – 404A15 – – COVER – LIFTGATE LATCH				
XB	78		1	ARC6DB 78 404A15 A
– – 404A18/9 – – GUIDE – BACK DOOR LOCK OUTSIDE STRIKER				
XA/B	78	R.H.	1	XA 78 404A18 AA
XA/B	78	L.H.	1	XA 78 404A19 AA
XA/B	78	Screw – No. 10 – 32 x .75" – guide & lock assy. to back door inner R.H.	2	50439 S13
XA/B	78	Bolt – ¼" – 20 x .75" – guide to back door L.H.	2	20344 S78
XA/B	78	Washer – ext. tooth – ¼" – guide to back door L.H.	2	34940 S7
– – 404B28 – – BRACKET & GUIDE – LIFTGATE LATCH				
XB	78	To 4/74	2	XB 78 404B28 A
XB	78	From 4/74	2	XB 78 404B28 B*
– – 404A50 – – BRACKET ASSY. – LIFTGATE LATCH RELEASE LEVER				
XB	78		2	XB 78 404A50 AA*
– – 404A63 – – PAD – LIFTGATE HANDLE				
XB	78		1	ARC8DB 78 404A63 A
– – 404A80 – – HANDLE AND CYLINDER ASSY. – LIFTGATE				
XB	78		1	ARC6DB 78 404A80 C
XB	78	Lockwasher – handle to body	2	34939 S7
XB	78	Nut – No. 10 – 32 – handle to body	2	34079 S7/8
– – 404C80 – – LOCK SET – LIFTGATE				
XB	78		1	XB 78 404C80 AA*
– – 404A84 – – LEVER – LIFTGATE RELEASE				
XB	78		1	XB 78 404A84 A
– – 405A26 – – DOOR ASSY. – FUEL FILLER OPENING				
ZF/G	All		1	ZF 54 405A26 A
ZF/G	All	Screw – No. 10 – 24 x ½" – door assy. to panel	2	54564 S8
ZF/G	All	Grommet – fuel filler door stop	2	379162 S

MODEL	BODY TYPE	REMARKS	UNIT	PART NUMBER
– – 40527 – – RETAINER – BACK DOOR CHECK ARM LINK				
XA/B	78		4	XA 78 40527 A
– – 406A27 – – DECAL – LUGGAGE COMPARTMENT DOOR				
XB	54H, 65H	"GT 351" – black	1	XB 54 406A27 AA1A
XB	54H, 65H	"GT 351" – silver	1	XB 54 406A27 AA1S
– – 40650 – – COVER ASSY. – TONNEAU				
XA/B	66		1	XA 66 40650 A
XA/B	66	Plate – fastener clinch	7	95045 S
XA/B	66	Socket	7	95043 S
XA/B	66	Plate – rope fix	2	V 387797 S
– – 40674 – – BOW – TONNEAU COVER				
XA/B	66		1	XA 66 40674 AA
– – 40692 – – STUD ASSY. – TONNEAU COVER FASTENER				
XA/B	66		7	ARC6DB 66 40692 A
XA/B	66	Rope ring cleat	2	V 387797 S
– – 40706 – – PANEL ASSY. – TAILGATE INNER				
XA	66		1	XA 66 40706 A
– – 40709 – – GATE ASSY. – TAIL LESS HINGES				
XA/B	66		1	XB 66 40709 A
XA/B	71	Manual – single action	1	XB 71 40709 A
XA/B	71	Manual – dual action	1	XB 71 40709 B
XA	71	Electric – single action	1	XA 71 40709 C
XB	71	Electric – single action	1	XB 71 40709 C
XA	71	Electric – dual action	1	XA 71 40709 D
XB	71	Electric – dual action	1	XB 71 40709 D
XB	78		1	XB 78 40709 A
– – 40710 – – PANEL – TAILGATE OUTER				
XA	66		1	XA 66 40710 A
XB	66		1	XB 66 40710 A
XA/B	71	Manual – single action	1	XB 71 40710 A
XA/B	71	Manual – dual action	1	XB 71 40710 B
XA	71	Electric – single action	1	XA 71 40710 C
XB	71	Electric – single action	1	XB 71 40710 C
XA	71	Electric – dual action	1	XA 71 40710 D
XB	71	Electric – dual action	1	XB 71 40710 D
XB	78		1	XB 78 40710 A
– – 407A10 – – RETAINER – TAILGATE PANEL COVER				
XA/B	71		1	XA 71 407A10 AP
– – 407A12 – – RETAINER – TAILGATE OUTSIDE MOULDING				
XB	71D		2	XB 71 407A12 A
– – 407A13 – – PANEL – TAILGATE INSIDE COVER				
XA/B	66, 78		1	XY 66 407A13 AAP
XA/B	66, 78	Screw – No. 8 – 18 x 3/8" – att. panel	4	52720 S8
– – 40714 – – BUMPER – TAILGATE				
XA/B	66		2	XA 66 40714 AA
– – 40726 – – COVER – TAILGATE INSIDE				
XA/B	71		1	XA 71 40726 AP
– – 40732 – – RETAINER – TAILGATE COUNTER BALANCE TORSION BAR				
XA/B	71		1	XA 71 40732 A
– – 40743 – – TUBE – TAILGATE DRAIN				
XA/B	66, 78		2	B9MB 56 40743 A
– – 40790 – – COVER – BACK WINDOW REGULATOR ACCESS HOLE				
XA/B	71		1	XA 71 40790 A
– – 40840/1 – – SEAL – BACK DOOR HINGE TO OUTER PANEL				
XA/B	78	Upper	2	XA 78 40840 AC
XA/B	78	Lower	2	XA 78 40841 AC

MODEL	BODY TYPE	REMARKS	UNIT	PART NUMBER
– – 40964 – – DRIVE ASSY. – BACK WINDOW REGULATOR				
XA/B	71	With power tailgate	1	C5AZ 71 40964 A
– – 41038/9 – – PILLAR – REAR CORNER OUTER				
XA/B	66	R.H.	1	XA 66 41038 A
XA/B	71	R.H.	1	XA 71 41038 A
XA/B	66	L.H.	1	XA 66 41039 A
XA/B	71	L.H.	1	XA 71 41039 A
– – 41060/1 – – GUSSET – CORNER PILLAR REINFORCEMENT TO HEADER				
XA/B	78A	R.H.	1	XA 78 41060 A
XB	78B	R.H.	1	XB 78 410A60 A*
XA/B	78A	L.H.	1	XA 78 41061 A
XB	78B	L.H.	1	XB 78 410A61 A*
– – 410A60/1 – – GUSSET ASSY. – CORNER PILLAR REINFORCEMENT TO HEADER (REFER 41060/1)				
– – 410A74/5 – – MOULDING ASSY. – REAR CORNER PILLAR OUTSIDE REAR				
XA/B	71	R.H. – use with Tu Tone paint	1	XA 71 410A74 A
XA/B	71	L.H. – use with Tu Tone paint	1	XA 71 410A75 A
XA/B	71	Screw – self tapping – att. moulding to body	4	51067 S46
– – 412A02/3 – – PILLAR ASSY. – REAR CORNER INNER – REAR				
XA/B	66	R.H.	1	XA 66 412A02 A
XA/B	71	R.H. – dual action tailgate	1	XA 71 412A02 B
XA/B	71	R.H. – single action tailgate	1	XA 71 412A02 A
XA/B	78	R.H. – w/back doors	1	XA 78 412A02 A
XB	78	R.H. – with liftgate	1	XB 78 412A02 B
XA/B	66	L.H.	1	XA 66 412A03 A
XA/B	71	L.H. – dual action tailgate	1	XA 71 412A03 B
XA/B	71	L.H. – single action tailgate	1	XA 71 412A03 A
XA/B	78	L.H. – w/back doors	1	XA 78 412A03 A
XB	78	L.H. – with liftgate	1	XB 78 412A03 B
– – 412A04/5 – – PILLAR ASSY. – REAR CORNER OUTER				
XA	78	R.H.	1	XA 78 412A04 A
XB	78	R.H.	1	XB 78 412A04 AC*
XA	78	L.H.	1	XA 78 412A05 A
XB	78	L.H.	1	XB 78 412A05 A*
– – 41210/1 – – PILLAR – REAR CORNER INNER FRONT UPPER				
XA/B	71	R.H.	1	XA 71 41210 A
XA/B	71	L.H.	1	XA 71 41211 A
– – 41230/1 – – PANEL – REAR CORNER OUTER				
XA/B	71	R.H.	1	XA 71 41230 A
XA/B	71	L.H.	1	XA 71 41231 A
– – 412A32/3 – – PILLAR – REAR CORNER INNER FRONT				
XA/B	71	R.H.	1	XA 71 412A32 A
XA/B	71	L.H.	1	XA 71 412A33 A
XA/B	71	Screw – No. 8 – 18 x 1.25" – att. moulding to pillar (412A32/3)	8	55936 S46
– – 41302 – – RAIL ASSY. – BACK WINDOW HEADER				
XA/B	71		1	XA 71 41302 A
XA/B	78A	With back doors	1	XA 78 41302 A
XB	78B	With back doors	1	XB 78 41302 AA
XB	78A	With liftgate	1	XB 78 41302 A
XB	78B	With liftgate	1	XB 78 41302 BA
– – 41608/9 – – WEATHERSTRIP ASSY. – TAILGATE				
XA/B	71	Black	1	XA 71 41608 AC1A
XA/B	71	Saddle	1	XA 71 41608 AC1V*
XA/B	66		2	XA 66 41608 AA
XB	78	R.H.	1	XB 78 41608 A
XB	78	L.H.	1	XB 78 41609 A
XA/B	66, 78	Screw – No. 10 – 12 x ¾" – weatherstrip to tailgate pillar	2	52743 S13
XB	78	Clip – spring – with liftgate	5	V 388272 S
XA	71	Screw – No. 8 – 18 x 3/8"	2	52720 S8

MODEL	BODY TYPE	REMARKS	UNIT	PART NUMBER
– – 416A08 – – WEATHERSTRIP ASSY. – TAILGATE AND BACK DOOR LOWER SILL OPENING				
XA/B	66		1	XA 66 416A08 AA
XA/B	78		1	XA 78 416A08 AA
XA	66, 78	Screw – No. 10 – 12 x ¾" – weatherstrip to body	2	52743 S13
XA/B	66, 78	Screw – No. 10 – 12 x ½" – w/strip to body	2	52727 S36
– – 41672 – – WEATHERSTRIP – TAILGATE INSIDE BELT				
XA/B	71		1	XA 71 41672 A
– – 41674 – – WEATHERSTRIP ASSY. – TAILGATE OUTSIDE BELT				
XA/B	71		1	XA 71 41674 A
– – 41954/5 – – WEATHERSTRIP – BACK DOOR WINDOW				
XA/B	78	R.H.	1	XA 78 41954 AA
XA/B	78	L.H.	1	XA 78 41955 AA
– – 42006 – – GLASS – BACK WINDOW (REFER 420K15 FOR HEATER ELEMENT REPAIR KIT)				
XA/B, ZF/G	54	Clear – unheated	1	XA 54 42006 A
XA/B, ZF/G	54	Tinted – unheated	1	XA 54 42006 B
XA/B, ZF/G	54	Clear – heated	1	XA 54 42006 C
XA/B, ZF/G	54	Tinted – heated	1	XA 54 42006 D
XA/B	65	Clear – unheated	1	XA 65 42006 A
XA/B	65	Tinted – unheated	1	XA 65 42006 B
XA/B	65	Clear – heated	1	XA 65 42006 C
XA/B	65	Tinted – heated	1	PL 65 42006 D
XA/B	66		1	XA 66 42006 AA
XA/B	71	Clear	1	XA 71 42006 A
XA/B	71	Tinted	1	XA 71 42006 B
XB	78	With liftgate	1	XB 78 42006 A
– – 420K15 – – KIT – HEATED REAR WINDOW REPAIR				
XB,ZG	All		1	A71SX 420K15 AA
– – 42084 – – WEATHERSTRIP ASSY. – BACK WINDOW				
XA	54A	To 11/72	1	XA 54 42084 A
XA,ZF	54B,C,D,E,G,H,	To 11/72	1	XA 54 42084 B
XA/B, ZF/G	54	From 11/72	1	XA 54 42084 B
XA/B	65		1	XA 65 42084 B
XA	66B	To 11/72	1	XA 66 42084 B
XA/B	66A,B	From 11/72	1	XA 66 42084 B
XA	66A	To 11/72	1	XA 66 42084 AA
XB	78	With liftgate	1	XB 78 42084 A
– – 422A02/3 – – PANEL – BACK WINDOW FRAME SIDE				
XA/B	66	R.H.	1	XA 66 422A02 A
XA/B	66	L.H.	1	XA 66 422A03 A
– – 42208 – – FRAME ASSY. – BACK WINDOW UPPER				
XA/B, ZF/G	54		1	XA 54 42208 A
XA/B	65		1	XA 65 42208 A
– – 422A08 – – CHANNEL ASSY. – BACK WINDOW GLASS				
XA/B	71		1	XA 71 422A08 A
– – 422B12 – – SEAL – BACK WINDOW REGULATOR DRIVE				
XA/B	71		1	C5AZ 71 422B12 B
– – 42220 – – FRAME – BACK WINDOW UPPER				
XA/B, ZF/G	54		1	XA 54 42220 A
XA/B	65		1	XA 65 42220 A
– – 422A20/1 – – RUN ASSY. – BACK WINDOW GLASS LOWER SIDE				
XA/B	71	R.H. – less channel	1	XA 71 422A20 A
XA/B	71	R.H. – includes channel	1	XA 71 422A20 B
XA/B	71	L.H. – less channel	1	XA 71 422A21 A
XA/B	71	L.H. – includes channel	1	XA 71 422A21 B
XA/B	71	Screw – No. 8 – 18 – att. run assy.	4	376387 S101
– – 422B22 – – GASKET – BACK WINDOW REGULATOR DRIVE				
XA/B	71		1	C5AZ 71 422B22 A
– – 422A25 – – FRAME – BACK WINDOW – UPPER				
XA/B	66		1	XA 66 422A25 A*

MODEL	BODY TYPE	REMARKS	UNIT	PART NUMBER
– – 422A36 – – RUN ASSY. – BACK WINDOW GLASS TOP				
XA/B	71		1	XA 71 422A36 A
– – 422A66 – – WEATHERSTRIP ASSY. – LIFTGATE				
XB	78		1	XB 78 422A66 A
– – 423A04 – – RETAINER ASSY. – BACK BELT SIDE MOULDING				
XA/B, ZF/G	54	Vinyl roof	8	XA 54 423A04 A
– – 423A20/1 – – MOULDING – BACK BELT (REFER 29300 FOR ATTACHING KIT)				
XA/B	65	R.H. – with Tu Tone paint or vinyl roof	1	XA 65 423A20 A
XA/B	65	L.H. – with Tu Tone paint or vinyl roof	1	XA 65 423A21 A
– – 423A22/3 – – MOULDING – BACK BELT SIDE (REFER 29300 FOR ATTACHING KIT)				
XA/B	54	R.H. – with Tu Tone paint or vinyl roof	1	XA 54 423A22 A
XA/B	65	R.H. – with Tu Tone paint or vinyl roof	1	XA 65 423A22 A
ZF/G	All	R.H. – with Tu Tone paint or vinyl roof	1	ZF 54 423A22 A
XA/B	54	L.H. – with Tu Tone paint or vinyl roof	1	XA 54 423A23 A
XA/B	65	L.H. – with Tu Tone paint or vinyl roof	1	XA 65 423A23 A
ZF/G	All	L.H. – with Tu Tone paint or vinyl roof	1	ZF 54 423A23 A
– – 423B43 – – BOARD – FUEL TANK PROTECTION				
XB	71	Inner – with aux. rear seats	1	XB 71 423B43 A
– – 423A46 – – MOULDING – TAILGATE OUTSIDE LOWER (REFER 29300 FOR ATTACHING KIT)				
XA	71D		1	XA 71 423A46 A
XA	71D	Nut – No. 8 – 32 – moulding to tailgate	4	372531 S100
XA	71D	Nut – No. 10 – 24 – moulding to tailgate	a/r	353911 S100
– – 423B48/9 – – MOULDING – BACK BELT SIDE REAR (REFER 29300 FOR ATTACHING KIT)				
XA/B	54	R.H. – with Tu Tone paint or vinyl roof	1	XA 54 423B48 A
XA/B	65	R.H. – with Tu Tone paint or vinyl roof	1	XA 65 423B48 A
ZF/G	54	R.H. – with Tu Tone paint or vinyl roof	1	ZF 54 423B48 A
XA/B	54	L.H. – with Tu Tone paint or vinyl roof	1	XA 54 423B49 A
XA/B	65	L.H. – with Tu Tone paint or vinyl roof	1	XA 65 423B49 A
ZF/G	54	L.H. – with Tu Tone paint or vinyl roof	1	ZF 54 423B49 A
– – 42374/5 – – RETAINER – BACK WINDOW GLASS UPPER SIDE				
XA/B	71	R.H.	1	XA 71 42374 A
XA/B	71	L.H.	1	XA 71 42375 A
– – 42404/5 – – MOULDING – BACK WINDOW OUTSIDE LOWER				
XA/B	54A	R.H.	1	XA 54 42404 CA
XA/B, ZF/G	54B,D,C,E,G	R.H.	1	XA 54 42404 BA
XA/B	54H	R.H.	1	XA 54 42404 BB
XA/B	65B,D	R.H.	1	XA 65 42404 CA
XA/B	65H	R.H. (also used 65B superbird)	1	XA 65 42404 DA
XA/B	54A	L.H.	1	XA 54 42405 CA
XA/B, ZF/G	54B,D,C,E,G	L.H.	1	XA 54 42405 BA
XA/B	54H	L.H.	1	XA 54 42405 BB
XA/B	65B,D	L.H.	1	XA 65 42405 CA
XA/B	65H	L.H. (also used 65B superbird)	1	XA 65 42405 DA
XA/B	66		1	XA 66 42404 A
– – 42413 – – RETAINER – BACK WINDOW OUTSIDE UPPER MOULDING				
XA/B, ZF/G	All	Windshield	16	C8AZ 63 42413 A
XA/B	71		6	XA 71 42413 A
– – 42416/7 – – MOULDING – BACK WINDOW GARNISH SIDE				
XA/B	71	R.H. – paint to suit	1	XA 71 42416 AA1F
XA/B	71	L.H. – paint to suit	1	XA 71 42417 AA1F
– – 42428/9 – – MOULDING – BACK WINDOW OUTSIDE CORNER				
XA/B	66B	R.H.	1	XA 66 42428 A
XA/B	66B	L.H.	1	XA 66 42429 A

MODEL	BODY TYPE	REMARKS	UNIT	PART NUMBER
– – 42430/1 – – MOULDING – BACK WINDOW OUTSIDE UPPER				
XA/B, ZF/G	54B,C,D,E,G,	R.H.	1	XA 54 42430 A
XA/B	54H	R.H.	1	XA 54 42430 B
XA/B	65B,D	R.H.	1	XA 65 42430 CA
XA/B	65H	R.H. (also used 65B superbird)	1	XA 65 42430 DA
XA/B	66B	R.H.	1	XA 66 42430 AC
XA/B, ZF/G	54B,C,D,E,G	L.H.	1	XA 54 42431 A
XA/B	54H	L.H.	1	XA 54 42431 B
XA/B	65B,D,	L.H.	1	XA 65 42431 CA
XA/B	65H	L.H. (also used 65B superbird)	1	XA 65 42431 DA
XA/B	66B	L.H.	1	XA 66 42431 AC
XA/B	71		1	XA 71 42430 A
– – 424A44/5 – – MOULDING ASSY. – LOWER BACK PANEL				
XA/B	65D,H	R.H.	1	XA 65 424A44 B
XA/B	65D,H	L.H.	1	XA 65 424A45 B
XA/B	65D,H	Nut – 3/16" – moulding to lower back panel	8	371107 S100
– – 42462 – – RETAINER – BACK WINDOW O/SIDE UPPER MOULDING				
XA/B	71	Att. XA 71 42478/9 to body	2	XA 71 42462 A
– – 42478/9 – – MOULDING ASSY. – BACK WINDOW OUTSIDE SIDE				
XA/B	71	R.H.	1	XA 71 42478 A
XA/B	71	L.H.	1	XA 71 42479 A
– – 42512 – – MOULDING – LUGGAGE COMPARTMENT DOOR (REFER 29300 FOR ATTACHING KIT)				
XA	54B,C,D,H		1	XA 54 42512 A
ZF/G	54E,G		1	ZF 54 42512 A
XB	71D		1	XB 71 42512 A
XA/B, ZF/G	All	Nut – No. 10 – 24 – moulding to deck lid	a/r	353911 S100
– – 425B14/5 – – CAP – TAILGATE OUTSIDE BELT MOULDING				
XA/B	71	R.H.	1	XA 71 425B14 AB
XA/B	71	L.H.	1	XA 71 425B15 AB
– – 42528 – – NAME – PLATE LUGGAGE COMPARTMENT DOOR (REFER 29300 FOR ATTACHING KIT)				
XA	54H		1	XA 54 42528 A
– – 42533 – – RETAINER ASSY. – MOULDING LUGGAGE COMPARTMENT DOOR				
XA/B	65H		2	C8GB 54 42533 A
– – 42592 – – RETAINER – T/GATE PANEL FINISH				
XB	71D		6	XB 71 42592 A
– – 42700/1 – – HINGE ASSY. – LUGGAGE COMPARTMENT DOOR				
XA,ZF	54	R.H. & L.H. – to 3/73	2	XA 54 42700 A
XA/B, ZF/G	54	R.H. – from 3/73 to 9/74	1	XA 54 42700 A
XB,ZG	54	R.H. – from 9/74	1	XB 54 42700 A*
XA	65	R.H. & L.H. – to 3/73	2	XA 65 42700 A
XA/B	65	R.H. – from 3/73 to 9/74	1	XA 65 42700 A
XB	65	R.H. – from 9/74	1	XB 65 42700 A*
XA/B, ZF/G	54	L.H. – from 3/73	1	XA 54 42701 A
XA/B	65	L.H. – from 3/73	1	XA 65 42701 A
– – 42738/9 – – BRACKET – LUGGAGE COMPARTMENT DOOR HINGE TO WHEEL HOUSE				
XA/B	54	R.H.	1	XA 54 42738 A
XA/B	65	R.H.	1	XA 65 42738 A
ZF/G	All	R.H.	1	ZF 54 42738 A
XA/B	54	L.H. – to 12/74	1	XA 54 42739 A
XB	54	L.H. – from 12/74	1	XB 54 42739 A*
XA/B	65	L.H. – to 12/74	1	XA 65 42739 A
XB	65	L.H. – from 12/74	1	XB 65 42739 A*
ZF/G	All	L.H. – to 12/74	1	ZF 54 42739 A
ZG	All	L.H. – from 12/74	1	ZG 54 42739 A*
– – 42898 – – SUPPORT ASSY. – LUGGAGE COMPARTMENT DOOR LATCH				
XA/B	65		1	XA 65 42898 A
– – 42900/1 – – HINGE ASSY. – BACK DOOR UPPER				
XA/B	78	R.H.	1	XA 78 42900 AA
XB	78	R.H. – with liftgate	1	XB 78 42900 A
XA/B	78	L.H.	1	XA 78 42901 AA
XB	78	L.H. – with liftgate	1	XB 78 42901 A

MODEL	BODY TYPE	REMARKS	UNIT	PART NUMBER
– – 429A14/5 – – HINGE ASSY. – BACK DOOR LOWER				
XA/B	78	R.H.	1	XA 78 429A14 AA
XA/B	78	L.H.	1	XA 78 429A15 AA
XA/B	78	Screw & washer – 5/16 – 18 x 1.0" hinge to door	4	379283 S2
– – 42918 – – PLATE – LIFTGATE HINGE MOUNTING				
XB	78		2	XB 78 42918 A
– – 429A30 – – STAY – LIFTGATE				
XB	78	O.R.C. (1) XB 78 404A10 A, (1) XB 78 404A11 A	2	XB 78 429A30 AA
– – 42946 – – COVER – LIFTGATE HINGE				
XB	78		4	XB 78 42946 A
– – 429A47 – – SEAL ASSY. – LIFTGATE HINGE TO BODY				
XB	78		2	XB 78 429A47 A*
– – 429A48 – – PLATE – LIFTGATE HINGE SEAL				
XB	78		2	XB 78 429A48 A*
– – 429A58/9 – – PLATE ASSY. – BACK DOOR HINGE TO BODY				
XA/B	78	R.H.	1	XA 78 429A58 A
XA/B	78	L.H.	1	XA 78 429A59 A
– – 43000/1 – – HINGE ASSY. – TAILGATE				
XA/B	66	R.H.	1	XA 66 43000 A
XB	78	R.H. – with liftgate	1	XA 66 43000 A
XA/B	71	R.H.	1	XA 71 43000 A
XA/B	66	L.H.	1	XA 66 43001 A
XB	78	L.H. – with liftgate	1	XA 66 43001 A
XA/B	71	L.H.	1	XA 71 43001 A
XA/B	66	Screw – hinge to body	6	379283 S2
XB	78	Nut & washer – .3125 x 18 – hinge to tailgate	6	376838 S2*
– – 43012/3 – – BAR – TAILGATE COUNTER BALANCE TORSION (REFER 44890/1)				
– – 430B14 – – SEAL – REAR DOOR HINGE				
XB	78	O.N.R.	4	XA 78 430B14 A
– – 430A30 – – BRACKET – TAILGATE COUNTER BALANCE TORSION BAR				
XA/B	71	On body	1	XA 71 430A30 A
XA/B	71	On gate	2	XA 71 430A30 B
XA	71	On gate	1	XA 71 430A30 C
XA/B	71	R.H. – single action tailgate	1	XA 71 430A31 A
– – 430A36 – – SHIM				
XA/B	71	Tailgate hinge on body lower – manual dual action	1	XA 71 430A36 D
XA/B	71	Tailgate hinge on gate lower	2	XA 71 430A36 AA
XA/B	71	Tailgate hinge on body R.H.	4	XA 71 430A36 CA
XA/B	71	Tailgate on body lower	6	XA 71 430A36 B
– – 430A48 – – STOP ASSY. – TAILGATE LOWER HINGE				
XA/B	71	Manual gate – dual action	1	XA 71 430A48 A
– – 43052 – – CABLE ASSY. – TAILGATE CHECK				
XA	66	To 5/73	2	XA 66 43052 AA
XA/B	66, 78	From 5/73	2	XA 66 43052 AB*
XA/B	71	Single action	2	XA 71 43052 A
XA/B	71	Dual action	1	XA 71 43052 B
XA/B	66	Clip– cable retaining	2	111330 ES
XA/B	66	Bolt – 5/16 – 18 x 1.28 – cable to body	4	V 388283 S36
XA/B	71	Bolt – 7/16 – 14 x 1.28 – cable to body	4	V 388235 S
– – 43056 – – HINGE ASSY. – TAILGATE LOWER R.H.				
XA/B	71	Dual action	1	XA 71 43056 A
– –' 430A66 – – BRACKET – TAILGATE OUTSIDE HANDLE				
XA/B	71	Dual action	1	XA 71 430A66 A
– – 430A70 – – HANDLE & HOUSING ASSY.				
XA/B	71	Tailgate – dual action	1	XA 71 430A70 A
XA/B	78	Back door – external	1	XA 78 430A70 AA

MODEL	BODY TYPE	REMARKS	UNIT	PART NUMBER			
– – 43074 – – BUSHING – TAILGATE COUNTER BALANCE TORSION BAR							
XA/B	71		1	C6AB	71	43074	C
– – 43086 – – HINGE ASSY. – UPPER ON BODY							
XA/B	71	Dual action	1	XA	71	43086	A
– – 43090 – – HINGE ASSY. – TAILGATE UPPER ON GATE							
XA/B	71	Dual action	1	XA	71	43090	A
– – 43098 – – SPACER – TAILGATE UPPER HINGE ON BODY							
XA/B	71	Dual action – .030" thick	4	XA	71	43098	A
XA/B	71	Dual action – .060" thick	4	XA	71	43098	B
– – 43100 – – LOCK & ROD ASSY. – DOOR REAR – INTERIOR L.H.							
XA/B	78		1	XA	78	43100	AA
XA/B	78	Screw – ¼" x 20 – lock to door	2	57306 S2			
– – 43102 – – LOCK ASSY. – REAR DOOR							
XA	78		1	XA	78	43102	AA
XB	78	With back doors	1	XB	78	43102	AD*
XB	78	R.H. – with liftgate	1	XB	78	43102	A
XB	78	L.H. – with liftgate	1	XB	78	43102	B
XA/B	78	Screw – No. 10 – 32 .50" – lock assy. to inner panel back door R.H.	2	50810 S13			
XA/B	78	Washer – No. 10 x .560" flat – lock assy. to inner panel back door R.H.	2	44716 S8			
– – 431K08 – – GUIDE – BACK DOOR ROD							
XA/B	78		2	XA	78	431K08	AA
– – 43118 – – PLATE – BACK DOOR LOCK STRIKER UPPER							
XA/B	78		1	XA	78	43118	AA
– – 431A24 – – LINK – TAILGATE UPPER LATCH TO LOWER LATCH							
XA/B	71	Dual action – to 1/75	1	C6AZ	71	431A24	A
XB	71	Dual action – from 1/75	1	XB	71	431A24	A*
– – 43139 – – PLATE – TAILGATE LOCK STRIKER ANCHOR							
XA/B	66		1	XA	66	43139	A
XB	78	With liftgate	1	XA	66	43139	A
– – 43150/1 – – LOCK ASSY. – TAILGATE							
XA/B	71	R.H. – single action	1	C5AZ	71	43150	A
XA/B	71	L.H. – single action	1	XA	71	43151	A
XA/B	71	Manual – dual action	1	XA	71	43151	B
– – 43152 – – SHIM – TAILGATE LOCK LOWER STRIKER							
XA/B	71		1	C6AZ	71	43152	B
– – 431F52/3 – – STRIKER ASSY. – TAILGATE UPPER LATCH							
XA/B	71	R.H.	1	XA	71	431F52	A
XA/B	71	L.H.	1	XA	71	431F53	A
– – 431D54/5 – – LINK ASSY. – TAILGATE LOCK RELEASE WITH ANTI RATTLE							
XA/B	71	R.H.	1	XA	71	431D54	A
XA/B	71	L.H.	1	XA	71	431D55	A
– – 431E60 – – LINK ASSY. – TAILGATE UPPER HINGE RELEASE WITH ANTI RATTLE							
XA/B	71	Dual action	1	XA	71	431E60	A
– – 431C62 – – HANDLE ASSY. – TAILGATE							
XA/B	71		1	XA	71	431C62	A
– – 43170 – – CONTROL ASSY. – TAILGATE LOCK RELEASE							
XA/B	66		1	XA	66	43170	AA
XB	78	With liftgate	1	XA	66	43170	AA
XA/B	71		1	C6AZ	71	43170	A

MODEL	BODY TYPE	REMARKS	UNIT	PART NUMBER
– – 43172/3 – – BRACKET ASSY. – TAILGATE LATCH				
XA/B	66	R.H. – to 4/74	1	XA 66 43172 B
XB	78	R.H. – with liftgate to 4/74	1	XA 66 43172 B
XB	66	R.H. – from 4/74	1	XB 66 43172 A*
XB	78	R.H. – with liftgate – from 4/74	1	XB 66 43172 A*
XA/B	66	L.H. – to 4/74	1	XA 66 43173 B
XB	78	L.H. – with liftgate – to 4/74	1	XA 66 43173 B
XB	66	L.H. – from 4/74	1	XB 66 43173 A*
XB	78	L.H. – with liftgate – from 4/74	1	XB 66 43173 A*
– – 431E72 – – STRIKER ASSY. – TAILGATE LOWER LOCK				
XA/B	71		1	XA 71 431E72 A
– – 431F78 – – PLATE – TAILGATE LOCK MOUNTING				
XA/B	71	Single action	1	XA 71 431F78 A
– – 43181 – – SPRING – TAILGATE LATCH				
XA/B	66		2	ARC6DB 66 43181 A
XB	78	With liftgate	2	ARC6DB 66 43181 A
– – 431A82 – – STRIKER – TAILGATE LATCH				
XA/B	66		2	XA 66 431A82 AA
XB	78	With liftgate	4	XA 66 431A82 AA
– – 43187 – – LATCH ASSY. – TAILGATE				
XA/B	66		2	XA 66 43187 AA
XB	78	With liftgate	2	XA 66 43187 AA
XA/B	66	Clip – att. 43187 to 43170	2	V 387966 S
– – 431D88 – – LATCH ASSY. – TAILGATE LOWER				
XA/B	71	Manual – dual action	1	XA 71 431D88 B
– – 43200 – – LOCK ASSY. – LUGGAGE COMPARTMENT DOOR				
XA/B, ZF/G	54, 65		1	C5AZ 62 43200 A
XB	54	Police & taxi	1	XA 54 43200 A
– – 432A06 – – PLATE ASSY. – LUGGAGE COMPARTMENT DOOR LOCK STRIKER				
XA/B	65		1	XA 65 432A06 AA
– – 432A30 – – COVER – LUGGAGE COMPARTMENT DOOR LATCH				
XA/B	65		1	XA 65 432A30 A
– – 43235 – – BRACKET ASSY. – LUGGAGE COMPARTMENT DOOR LOCK STRIKER				
XA/B	54		1	XA 54 43235 A
ZF/G	All		1	ZF 54 43235 A
– –' 43252 – – PLATE – LUGGAGE COMPARTMENT DOOR LOCK STRIKER				
XA/B, ZF/G	54		1	C60B 62 43252 B
– – 43283 – – EXTENSION – LUGGAGE COMPARTMENT DOOR LOCK				
XA/B	54A,B,C,D,H		1	XA 54 43283 A
XA/B	65		1	XA 65 43283 AA
ZF	All		1	ZF 54 43283 A
– – 433A28 – – ROD – BACK DOOR LOCKING				
XA/B	78		1	XA 78 433A28 A
– – 433A36 – – PLATE – BACK DOOR LOCK STRIKER LOWER				
XA/B	78		1	XA 78 433A36 AA
– – 433A44 – – PLATE ASSY. – LIFTGATE LATCH STRIKER				
XB	78		2	XB 78 433A44 A
– – 434A00 – – HANDLE ASSY. – BACK DOOR LOCKING INSIDE				
XA/B	78		1	XA 78 434A00 AA
XA/B	78	Nut – ¼" x 20 – handle to door	1	34162 S13
XA/B	78	Washer – plain handle to door	1	44719 S78
XA/B	78	Washer – flat	1	44720 S2
– – 43504 – – ORNAMENT ASSY. – LUGGAGE COMPARTMENT DOOR				
ZF/G	All	"Fairlane"	1	ZF 54 43504 A
– – 43505 – – CYLINDER ASSY. – DOOR LOCK				
XA/B, ZF/G	All exc. 71	Luggage compt.	1	C8GY 54 43505 A

MODEL	BODY TYPE	REMARKS	UNIT	PART NUMBER			
-- 43507 -- LOCK SET -- LUGGAGE COMPARTMENT & GLOVE COMPARTMENT DOOR							
XA/B	71	With manual tailgate	1	C6AZ	71	43505	B
XA/B	71	With electric tailgate	1	C7DZ	71	43505	B
XA/B, ZF/G	54, 65		1	D1AZ	65	43507	A
-- 43562 -- KEY -- GLOVE & LUGGAGE COMPARTMENT DOOR CYLINDER LOCK BLANK							
XA/B, ZF/G	All		1	C7AZ	62	43562	A
-- 43625 -- PAD -- LUGGAGE COMPARTMENT DOOR LOCK CYLINDER SLEEVE							
XA/B, ZF/G	54, 65		1	C7AZ	62	43625	A
-- 43629 -- RETAINER -- DOOR LOCK CYLINDER							
XA/B, ZF/G	54, 65		1	C7AB	62	43629	A
-- 43720 -- WEATHERSTRIP -- LUGGAGE COMPARTMENT DOOR							
XA/B	54A,B,C,D,H		1	XA	54	43720	A
ZF/G	54E,G		1	ZF	54	43720	A
XA/B	65		1	XA	65	43720	A
-- 43884 -- ROD -- TAILGATE LOCK CONTROL							
XA/B	71	Dual action	1	XA	71	43884	A
-- 43946 -- ROLLER -- CHECK ARM BACK DOOR							
XA/B	78		2	XA	78	43946	A
-- 43970/1 -- BRACKET -- LIFTGATE PROP SUPPORT							
XB	78	R.H.	1	XB	78	43970	A*
XB	78	L.H.	1	XB	78	43971	A*
-- 44000 -- REGULATOR ASSY. -- BACK WINDOW							
XA/B	71	Manual	1	XA	71	44000	AA
XA/B	71	Power t/gate	1	XA	71	44000	BA
XA/B	71	Seal 'O' ring	1	377682 S			
-- 44008 -- HANDLE & KNOB ASSY. -- BACK WINDOW REGULATOR							
XA/B	71		1	XA	71	44008	A*
XA/B	71	Screw -- set -- .25 -- 20 x .25 -- headless -- handle to housing	2	300353 S8*			
XA/B	71	Pin -- 5/32" dia. x 1-1/8" long -- handle to housing	1	72473 S*			
-- 44009 -- HANDLE ASSY. -- BACK WINDOW REGULATOR							
XA/B	71		1	XA	71	44009	AB
-- 44011 -- PAD -- REGULATOR HANDLE BACK WINDOW							
XA/B	71	With manually op. t/gate window only	1	XA	71	44011	A
-- 44017 -- SOCKET -- BACK WINDOW REGULATOR STEM							
XA/B	71		1	XA	71	44017	A
-- 44036 -- CLIP -- RETAINING TAILGATE HANDLE							
XA/B	71		1	C1AZ	71	44036	A
-- 44044 -- HOUSING ASSY. -- BACK WINDOW REGULATOR HANDLE							
XA/B	71		1	XA	71	44044	A*
-- 44050 -- SPRING -- BACK WINDOW REGULATOR SOCKET -- RETAINER							
XA/B	71		1	C5AZ	71	44050	B
-- 44057 -- BUMPER -- REAR WINDOW STOP							
XA/B	71		1	XA	71	44057	A
-- 44074 -- BRACKET ASSY. -- BACK WINDOW REGULATOR ARM							
XA/B	71		2	XT	71	44074	A
-- 44104 -- ARM -- CHECK BACK DOOR							
XA/B	78		2	XA	78	44104	A
-- 44110 -- PLATE & BRACKET ASSY. -- CHECK ARM ROLLER MOUNTING							
XA/B	78		2	XA	78	44110	A
-- 44123 -- BUMPER -- BACK DOOR CHECK							
XB	78	From 9/74	1	XA	78	44123	A*
-- 44132 -- SPRING -- BACK DOOR CHECK ARM & LINK RETAINING							
XA/B	78		4	XA	78	44132	A

MODEL	BODY TYPE	REMARKS	UNIT	PART NUMBER
– – 44138 – – LINK – BACK DOOR CHECK ARM ROLLER				
XA/B	78		2	XA 78 44138 A
– – 441A52/3 – – PLATE ASSY. – BACK DOOR CHECK ARM MOUNTING				
XA/B	78	R.H.	1	XA 78 441A52 A
XA/B	78	L.H.	1	XA 78 441A53 A
– – 442A02 – – SPOILER & SUPPORT ASSY. – REAR				
XA/B	54H, 65H		1	R6 68 A
– – 442A18 – – LOUVRE ASSY. – REAR WINDOW				
XA/B	65	Not serviced – use 18246 accessory kit & discard hinges	1	442A18
XA/B	65	Washer – 442A18 to body	2	V 388379 S
XA/B	65	Washer – special tapered 442A18 to body	2	V 388379 S
XA/B	65	Wing nut – ¼ UNC – O.N.R. 442A18 to body	2	V 33895 S36
– – 44218/9 – – RETAINER – REAR SPOILER				
XA/B	54H	R.H.	2	XA 54 44218 A
XA/B	54H	L.H.	2	XA 54 44219 A
XA/B	65H		2	XA 65 44218 A
– – 44220 – – SPACER – AIR DEFLECTOR				
XA/B	71	Use with XA 71 001A04 A	6	XA 71 44220 A
– – 44228/9 – – GASKET – REAR SPOILER SUPPORT				
XA/B	54H, 65H	R.H.	1	D1ZZ 63 44228 A
XA/B	54H, 65H	L.H.	1	D1ZZ 63 44229 A
– – 44230 – – SPACER – SPOILER FRONT & REAR				
XA/B	54H, 65H		2	XA 54 44230 A
– – 44231 – – SPACER – REAR SPOILER				
XA/B	54H, 65H		2	XA 54 44231 A
– – 44272 – – HINGE ASSY. – BACK WINDOW LOUVRE				
XA/B	65		2	XA 65 44272 A
XA/B	65	Pawl nut – louvre hinge to roof panel	2	V 388247
– – 44280 – – PAD – BACK WINDOW LOUVRE HINGE				
XA/B	65	Front	2	XA 65 44280 A
XA/B	65	Rear	2	XA 65 44280 B
– – 444A12 – – SPRING – TAILGATE CABLE CHECK				
XA	66	R.H. – O.N.R.	1	XA 66 444A12 AA
XA/B	71	R.H.	1	XA 71 444A12 A
XA	66	L.H. – O.N.R.	1	XA 66 444A13 AA
XA/B	71	L.H.	1	XA 71 444A13 A
– – 444A16 – – STOP – GATE CHECK CABLE SPRING				
XA/B	71	Single action	1	C6DZ 71 444A16 A
– – 44676 – – RETAINER – BACK WINDOW O/SIDE LOWER MOULDING				
XA/B	71	Att. XA 71 42478/9 to body	2	XA 71 44676 A
– – 44804/5 – – REINFORCEMENT – LUGGAGE COMPT. DOOR OPENING SIDE				
XA/B	54	R.H.	1	XA 54 44804 A
ZF/G	All	R.H.	1	ZF 54 44804 A
XA/B	65	R.H.	1	XA 65 44804 A
XA/B	54	L.H.	1	XA 54 44805 A
ZF/G	All	L.H.	1	ZF 54 44805 A
XA/B	65	L.H.	1	XA 65 44805 A
– – 44890/1 – – BAR – LUGGAGE COMPARTMENT HINGE TORSION				
XA/B	54	R.H.	1	XA 54 44890 AB
ZF/G	All	R.H.	1	ZF 54 44890 AA
XA/B	65	R.H.	1	XA 65 44890 AA
XA/B	54	L.H.	1	XA 54 44891 AB
ZF/G	All	L.H.	1	ZF 54 44891 AA
XA/B	65	L.H.	1	XA 65 44891 AA
XA/B	71		1	XA 71 43012 A

MODEL	BODY TYPE	REMARKS	UNIT	PART NUMBER
– – 451A04/5 – – REINFORCEMENT – LUGGAGE COMPARTMENT DOOR OPENING				
XA/B, ZF/G	54, 65	R.H. – to 12/74	1	XA 54 451A04 A
XB,ZG	54, 65	R.H. – from 12/74	1	XB 54 451A04 A*
XA/B, ZF/G	54, 65	L.H. – to 12/74	1	XA 54 451A05 A
XB,ZG	54, 65	L.H. – from 12/74	1	XB 54 451A05 A*
– – 45118/9 – – TROUGH – LUGGAGE COMPT. DOOR OPENING LOWER CORNER DRAIN				
XA/B	54	R.H.	1	XA 54 45118 A
ZF/G	All	R.H.	1	ZF 54 45118 A
XA/B	65	R.H.	1	XA 65 45118 A
XA/B	54	L.H.	1	XA 54 45119 A
ZF/G	All	L.H.	1	ZF 54 45119 A
XA/B	65	L.H.	1	XA 65 45119 A
– – 45120/1 – – TROUGH – LUGGAGE COMPARTMENT UPPER CORNER DRAIN				
XA/B, ZF/G	54	R.H.	1	XA 54 45120 B
XA/B, ZF/G	54	L.H. – to 12/74	1	XA 54 45121 B
XB,ZG	54	L.H. – from 12/74	1	XB 54 45121 A*
– – 45456 – – REFER SOFT TRIM SECTION				
– – 454A56 – – SHROUD – FUEL FILLER PIPE				
ZF/G	All	To 12/74 – O.N.R.	1	ZF 54 454A56 A1A
– – 45470 – – FILLER ASSY. – LUGGAGE COMPARTMENT FLOOR				
XB,ZG	All	From 12/74	1	XB 54 45470 A*
– – 46320/1 – – REFER SOFT TRIM SECTION				
– – 46506 – – PANEL ASSY. – PACKAGE TRAY				
XA/B	54		1	XA 54 46506 A
XA/B	65		1	XA 65 46506 A
ZF/G	All		1	ZF 54 46506 A
– – 46656 – – REFER SOFT TRIM SECTION				
– – 466A56 – – REFER SOFT TRIM SECTION				
– – 466B56/7 – – REFER SOFT TRIM SECTION				
– – 46668 – – REFER SOFT TRIM SECTION				
– – 46689 – – DEADENER – PACKAGE TRAY STRAINER SOUND				
XA/B	54B,C, 65B		1	XA 54 46689 A
XA/B	54D,H, 65D,H		1	XA 54 46689 B
ZF/G	54E,G	O.N.R.	1	ZF 54 46689 A
– – 46774/5 – – STRAINER – PACKAGE TRAY TO WHEEL HOUSE				
XA/B	54	R.H.	1	XA 54 46774 A
XA/B	65	R.H.	1	XA 65 46774 A
ZF/G	All	R.H.	1	ZF 54 46774 A
XA/B	54	L.H.	1	XA 54 46775 A
XA/B	65	L.H.	1	XA 65 46775 A
ZF/G	All	L.H.	1	ZF 54 46775 A
– – 46912/3 – – BRACE – PACKAGE TRAY STRAINER				
XA/B	54		2	XA 54 46912 A
XA/B	65		2	XA 65 46912 A
ZF/G	All	R.H.	1	ZF 54 46912 A
ZF/G	All	L.H.	1	ZF 54 46913 A
– – 470A08 – – PANEL – SPARE WHEEL COMPT. TO QUARTER PANEL				
XB	71	Inner – with aux. rear seats – O.N.R.	1	XB 71 470A08 A
– – 47009 – – BUMPER ASSY. – SPARE WHEEL				
XB	71	With aux. rear seats	1	XB 71 47009 A
– – 470A10 – – PANEL – SPARE WHEEL COMPT. TO REAR FLOOR				
XB	71	Side – with aux. rear seats – O.N.R.	1	XB 71 470A10 A

MODEL	BODY TYPE	REMARKS	UNIT	PART NUMBER
– – 470A42 – – COVER ASSY. – SPARE WHEEL				
XA/B, ZF/G	54, 65		1	XY 54 470A42 AA
– – 47043 – – COVER ASSY. – SPARE WHEEL WELL				
XA/B	71		1	XA 71 47043 B
XA/B	71	Pin & sleeve assy. – cover hold down	2	AR 387308 S
XA/B	71	Pin – cover hold down	2	AR 387310 S2
XA/B	71	Spring clip, spare wheel cover to cross sill	2	AR 387412 S
XA/B	71	Spring clip – from 8/73	2	V 388444 S2
– – 470A44 – – ROD – SPARE WHEEL COMPARTMENT DOOR LATCH RELEASE (REFER 472A42)				
– – 470A66 – – DOWEL – SPARE WHEEL COMPARTMENT DOOR LATCH				
XA/B	66, 78		1	XA 66 470A66 AA
XA/B	66, 78	Nut & washer assy. – ¼ – 20 dowel to body	2	34657 S36
– – 47105 – – BRACKET ASSY. – SPARE WHEEL HOLD DOWN				
XA/B	54H, 65H	Large tank	1	XA 54 47105 AB
– – 47202 – – COMPARTMENT ASSY. – SPARE WHEEL				
XA/B	66, 78		1	XA 66 47202 A
– – 47204/5 – – PANEL – SPARE WHEEL COMPARTMENT SIDE				
XA/B	66, 78	R.H.	1	XA 66 47204 A
XA/B	66, 78	L.H.	1	XA 66 47205 A
– – 47207 – – PANEL – SPARE WHEEL COMPARTMENT BASE				
XA/B	66, 78		1	XA 66 47207 A
– – 472A21/2 – – PANEL ASSY. – SPARE WHEEL COMPARTMENT REAR				
XA/B	66, 78	R.H.	1	XA 66 472A21 A
XA/B	66, 78	L.H.	1	XA 66 472A22 A
– – 472A35 – – SUPPORT ASSY. – SPARE WHEEL COMPARTMENT DOOR				
XA/B	66, 78		2	XA 66 472A35 A
XA/B	66, 78	Screw – No. 10 – 24 x ½" – support assy.	2	54564 S8
XA/B	66, 78	Bolt – ¼" x 20 – support assy. to body	4	304624 S8
– – 472A42 – – ROD ASSY. – SPARE WHEEL COMPARTMENT DOOR LATCH RELEASE				
XA/B	66, 78	To 4/74	1	XA 66 472A42 AA
XB	66, 78	From 4/74 – to 1/75	1	XB 66 470A44 A*
XB	66, 78	From 1/75	1	XB 66 470A44 B*
– – 47250 – – REINFORCEMENT – SPARE WHEEL MNTG.				
XB	71	With aux. rear seats	1	XB 71 47250 A
– – 472A54 – – LATCH ASSY. – SPARE WHEEL COMPARTMENT RELEASE				
XA/B	66, 78		1	XA 66 472A54 AA
XA/B	66, 78	Screw – No. 10 – 24 x ½" – latch assy. to door	4	54564 S8
– – 47262 – – BUMPER – SPARE WHEEL COVER				
XB	71	Upper – with aux. rear seats	1	XB 71 47262 A
XB	71	Lower – with aux. rear seats	1	XB 71 47262 B
– – 47286 – – DOOR ASSY. – SPARE WHEEL COMPARTMENT				
XA/B	66, 78		1	XA 66 47286 A
XA/B	66, 78	Screw & washer assy. – ¼" – 20 x .50" door to spare wheel compt. not serviced	4	43260 S2
– – 47288 – – PANEL ASSY. – SPARE WHEEL COMPARTMENT DOOR INNER				
XA/B	66, 78		1	XA 66 47288 A
XA/B	66, 78	Bumper – use between spare wheel door & back panel lower	2	354489 S
– – 47291 – – HINGE ASSY. – SPARE WHEEL COMPARTMENT DOOR				
XA/B	66, 78		2	ARC6DB 66 47291 A

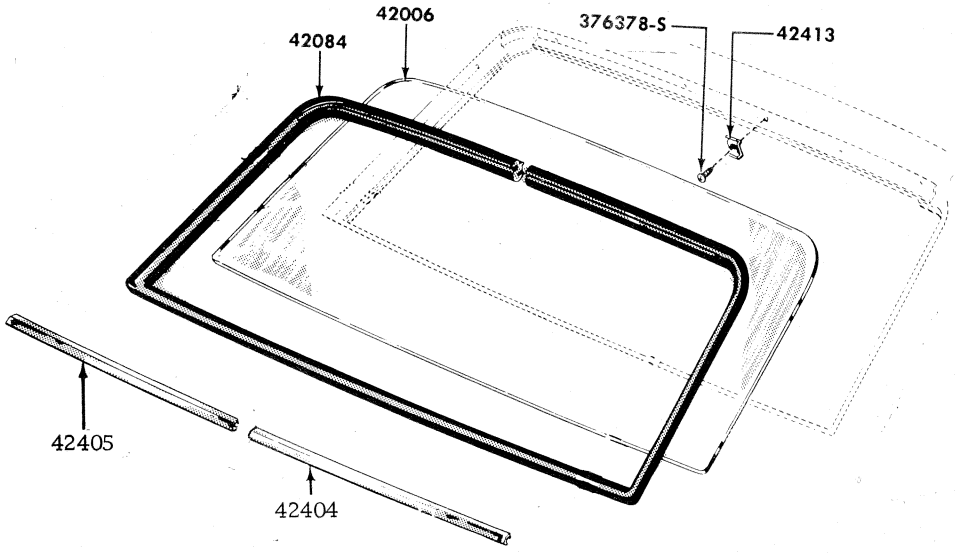

BACK WINDOW & EXTERIOR MOULDINGS BODY TYPE 54A

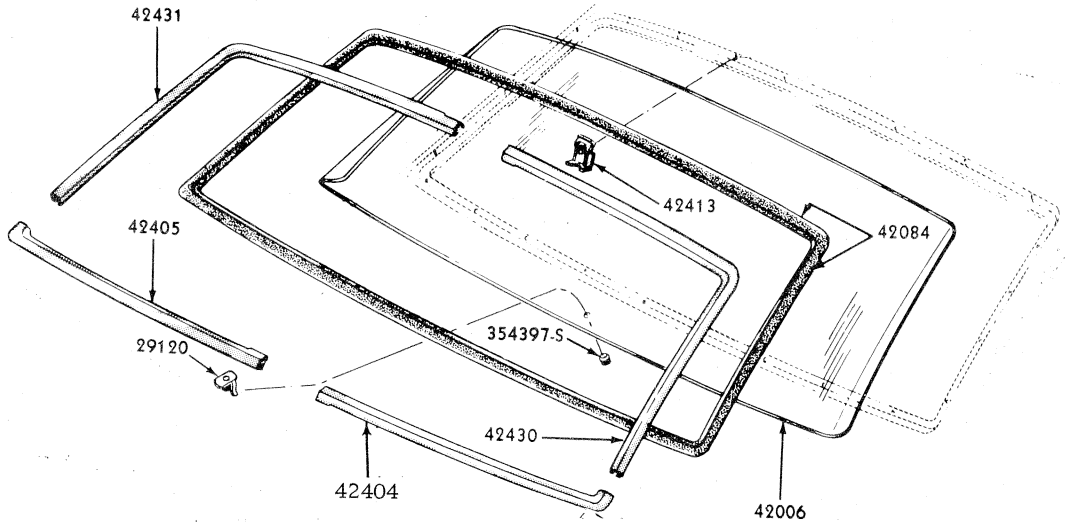

BACK WINDOW & EXTERIOR MOULDINGS BODY TYPE 54BCDEGH

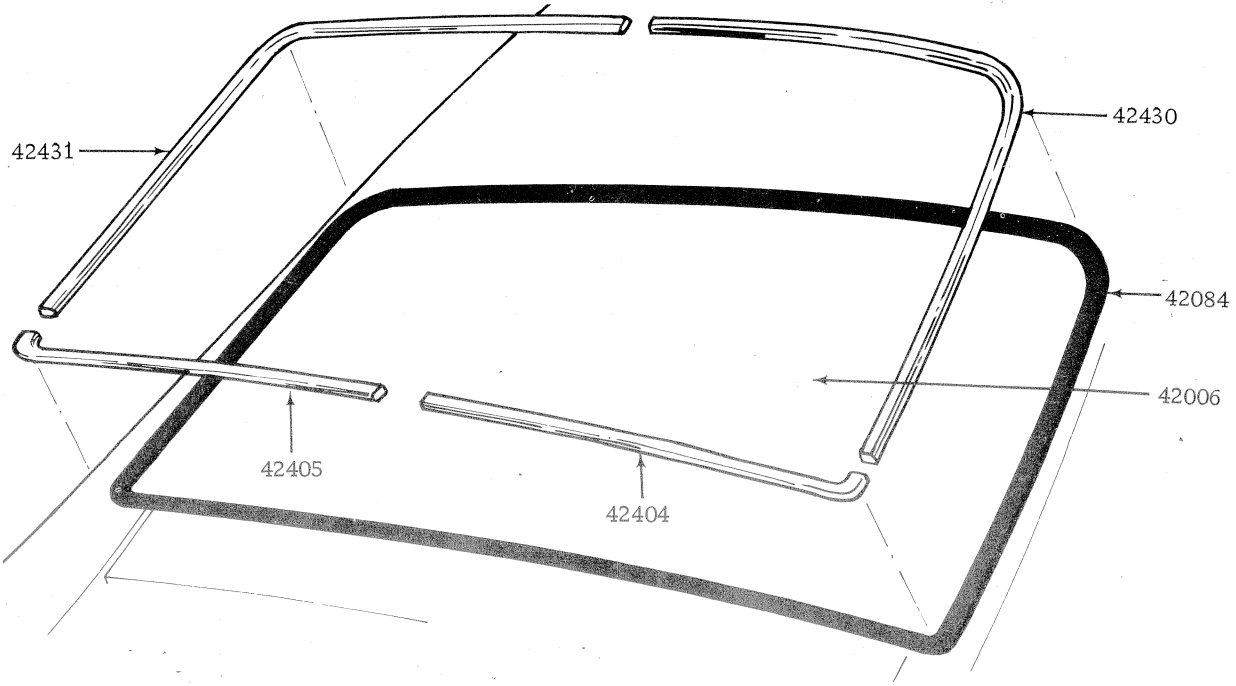

BACK WINDOW & EXTERIOR MOULDINGS BODY TYPE 65

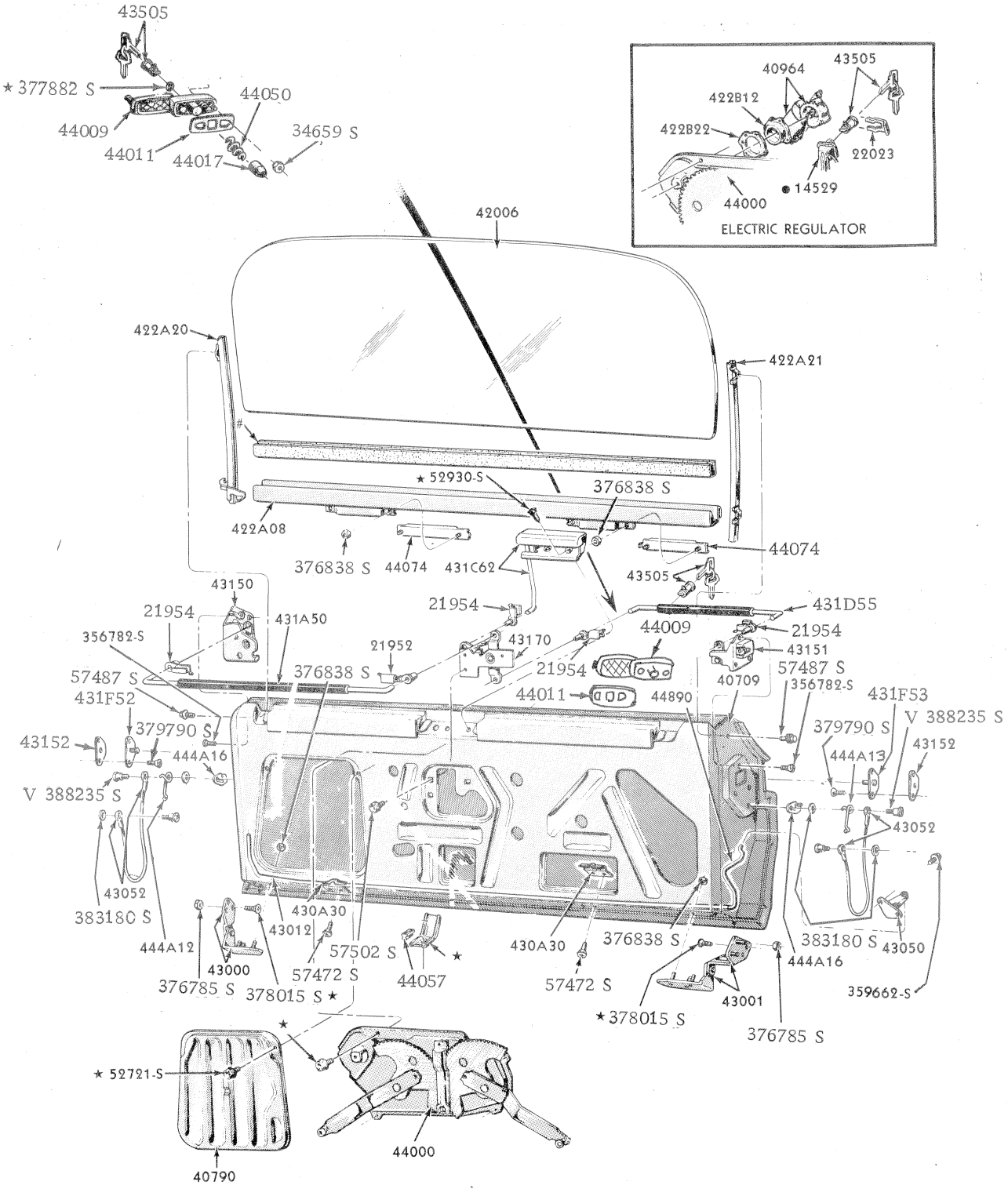

#USE BULK GLASS TAPE
● REFER TO GROUP IN CHASSIS SECTION
% FOR GEAR REPLACEMENT KIT REFER TO GROUP 234A24

TAILGATE AND RELATED PARTS SINGLE ACTION N01 14 7/9

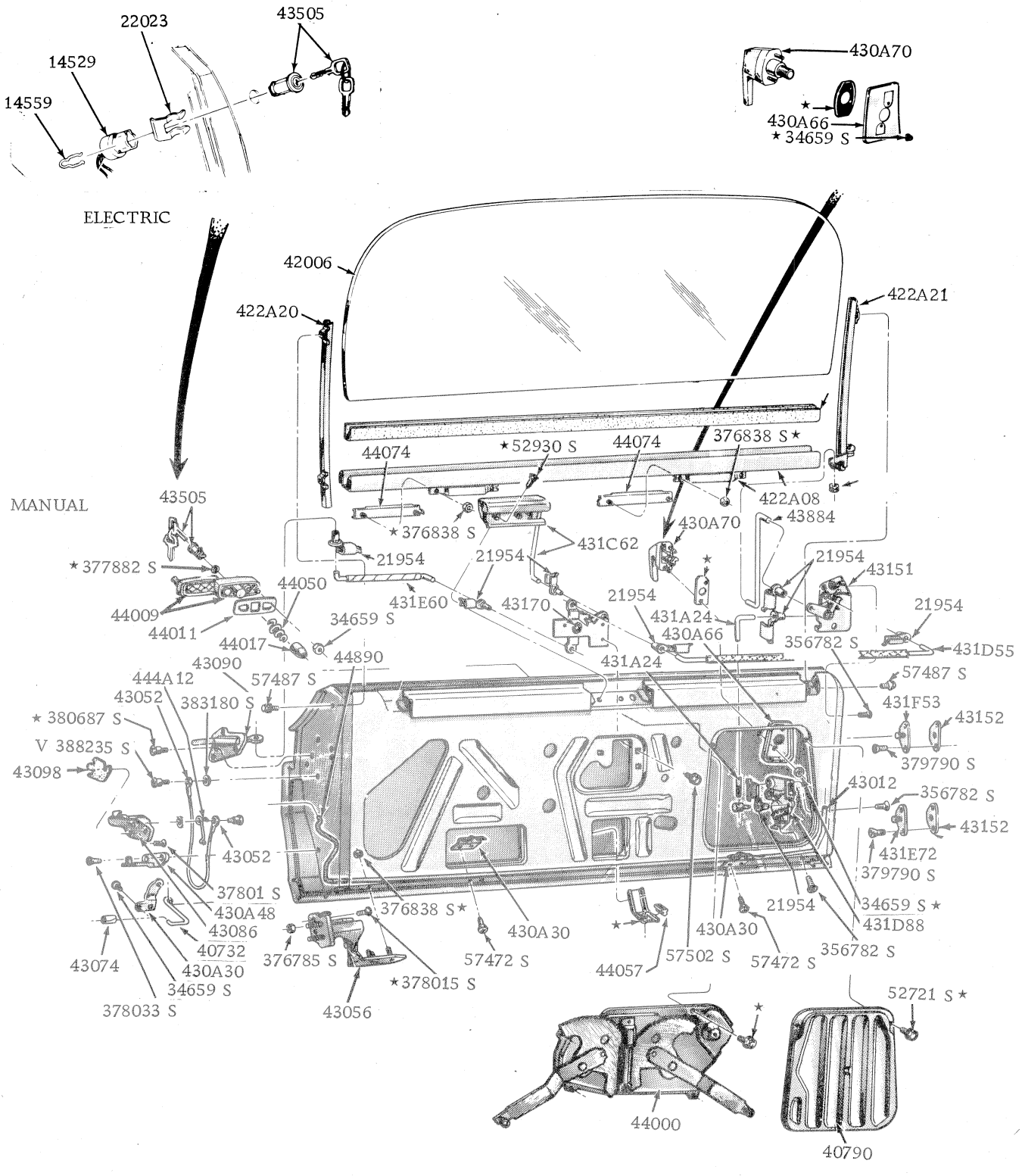

TAILGATE AND RELATED PARTS DUAL ACTION

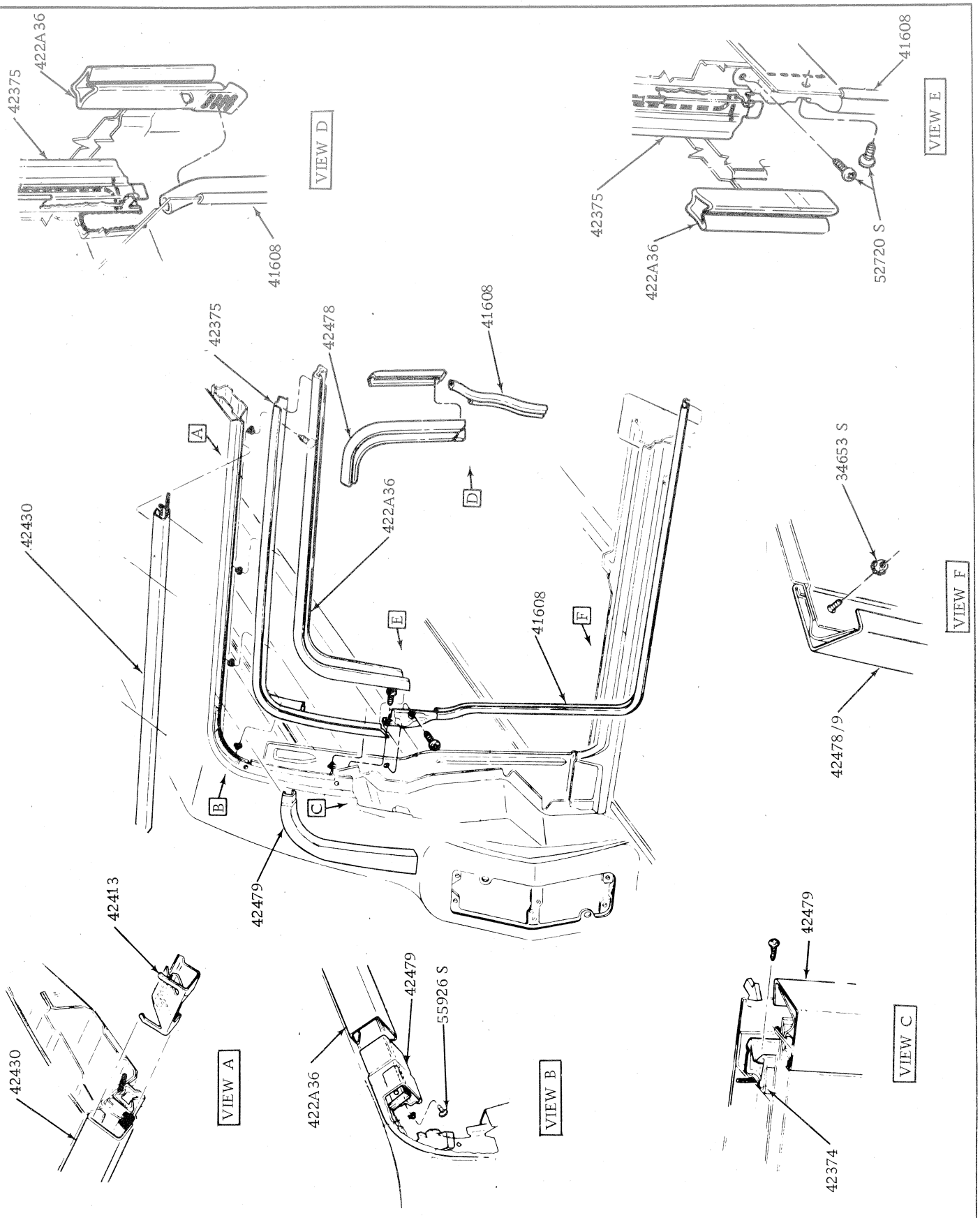

TAILGATE WEATHERSTRIPS & MOULDINGS

N01-07-05

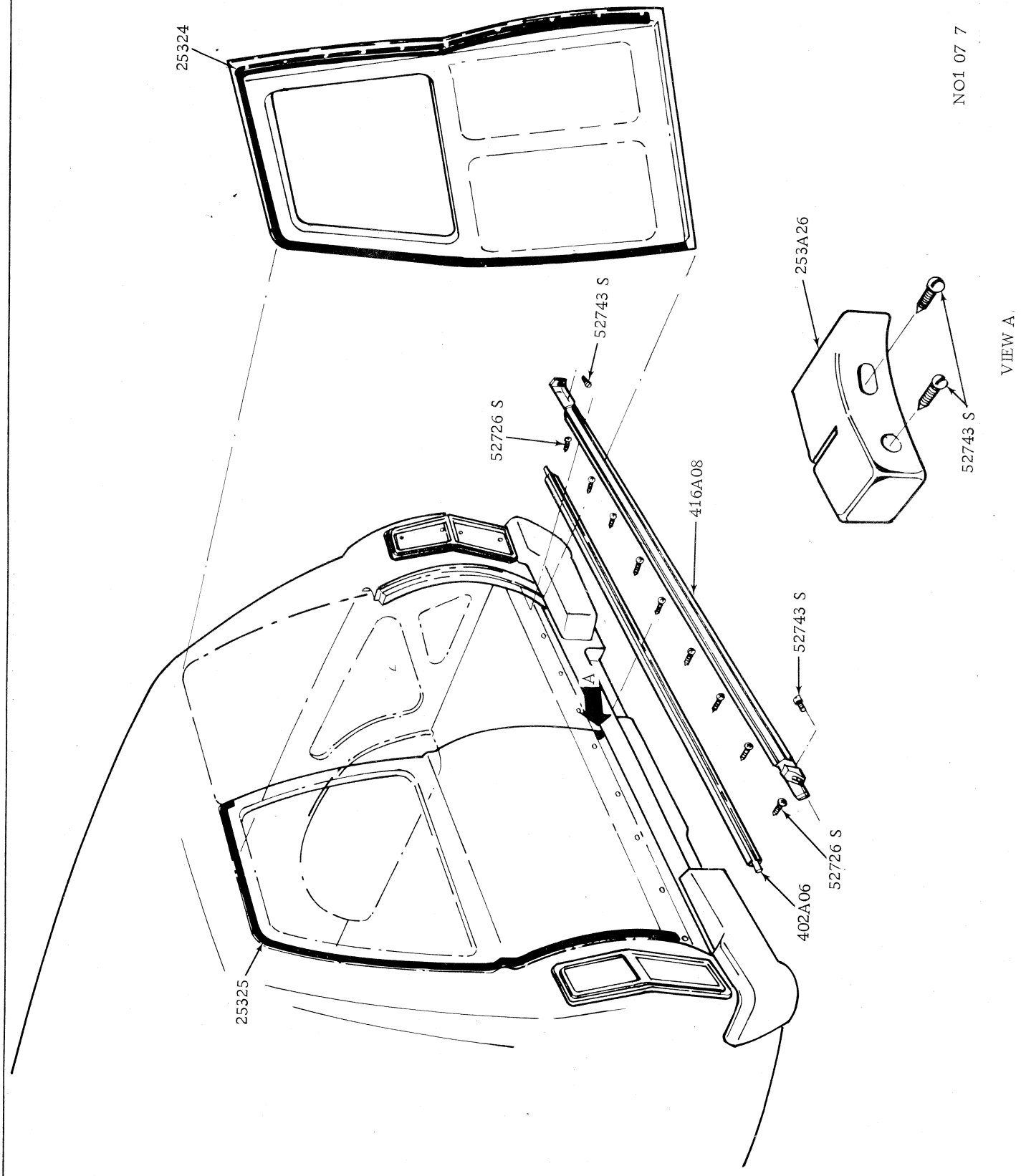

BACK DOOR WEATHERSTRIPS

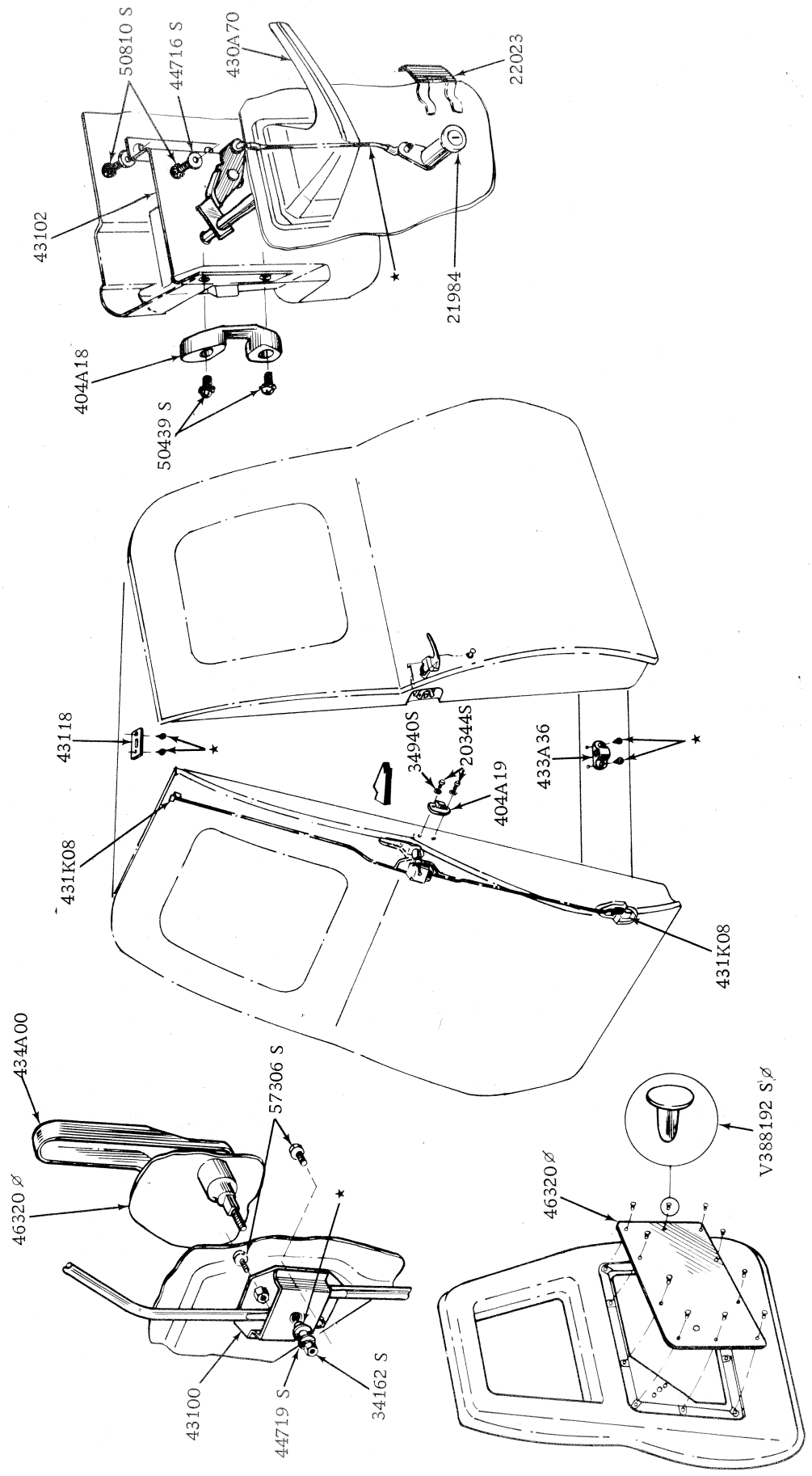

BACK DOOR HANDLE AND LATCHING – VAN

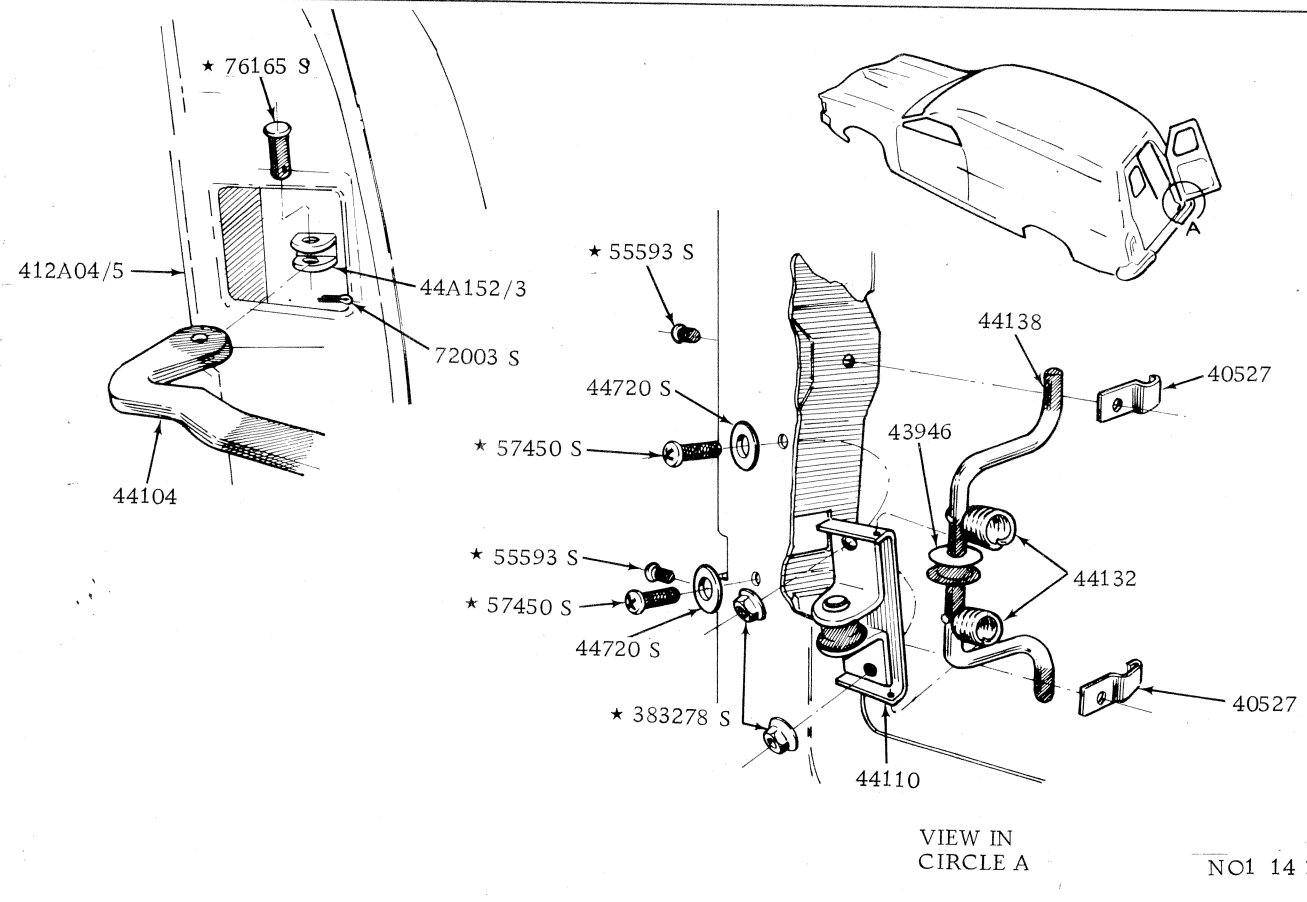

BACK DOOR CHECK ARM-VAN

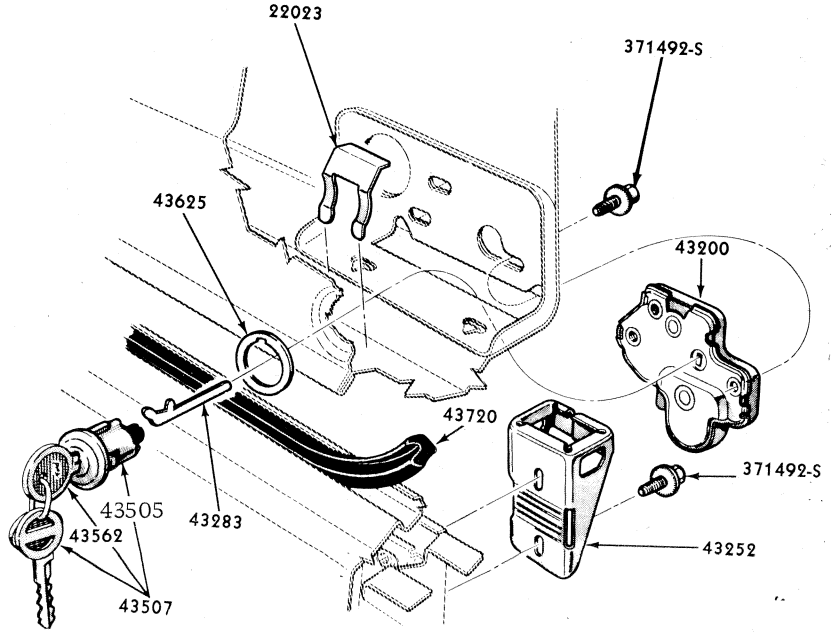

LUGGAGE COMPARTMENT DOOR LOCK AND RELATED PARTS

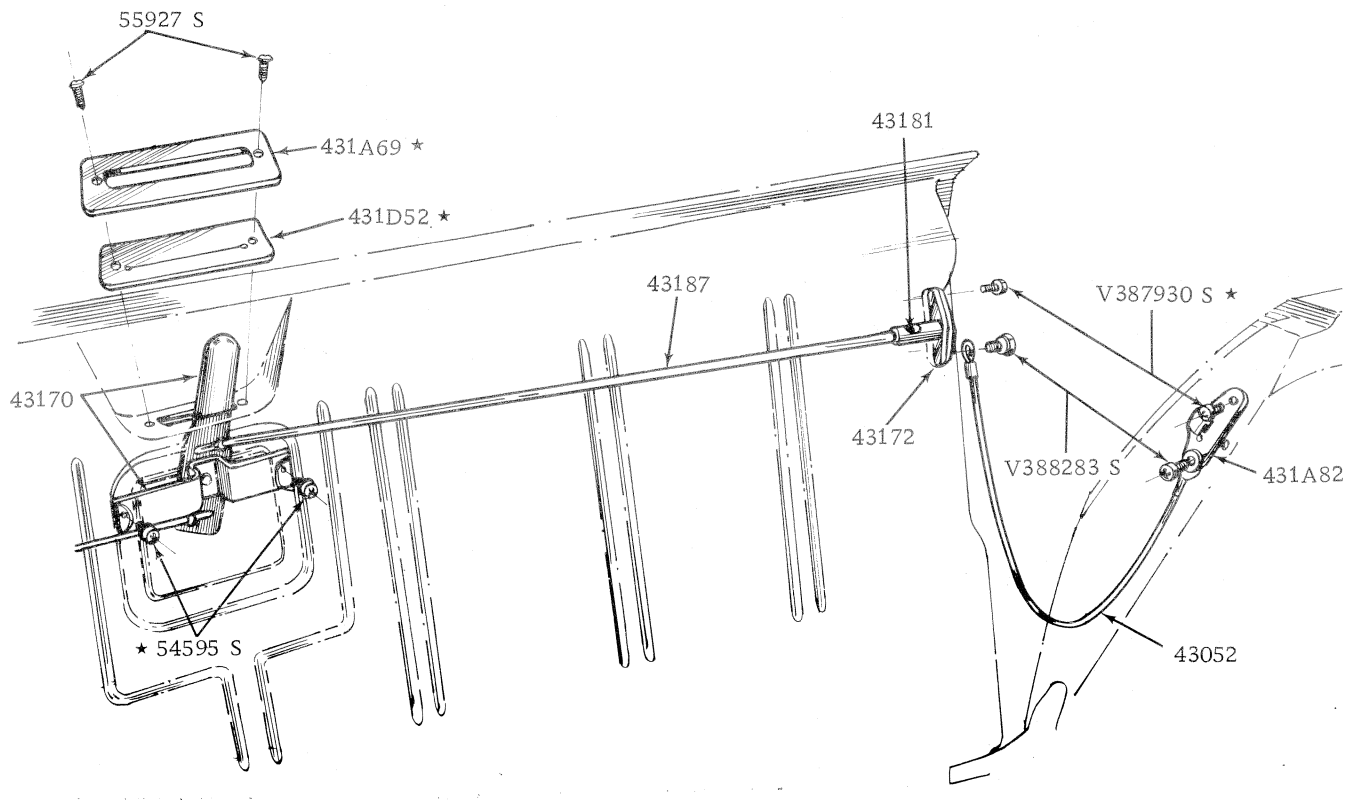

N01 14 13

TAILGATE MECHANISM-UTE

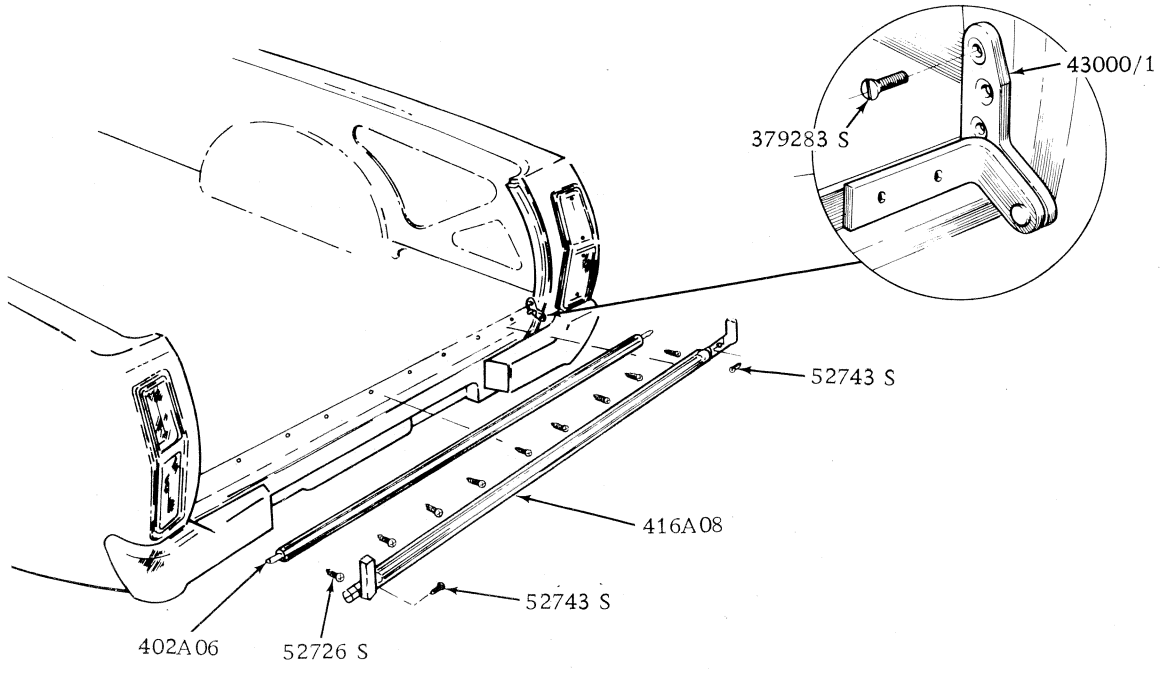

WO1 03 3
WO7 07 1

TAILGATE WEATHERSTRIP, HINGE AND RELATED PARTS-UTE

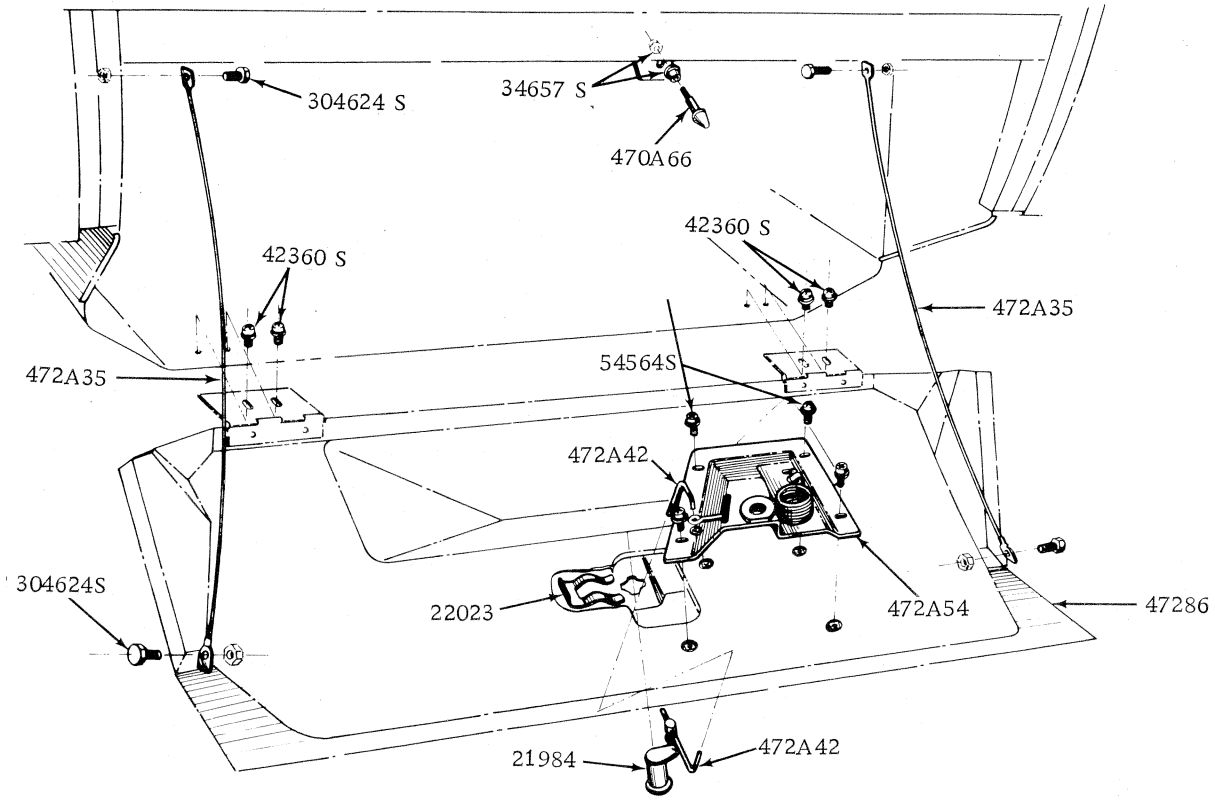

SPAREWHEEL COMPARTMENT DOOR SUPPORT AND RELATED PARTS

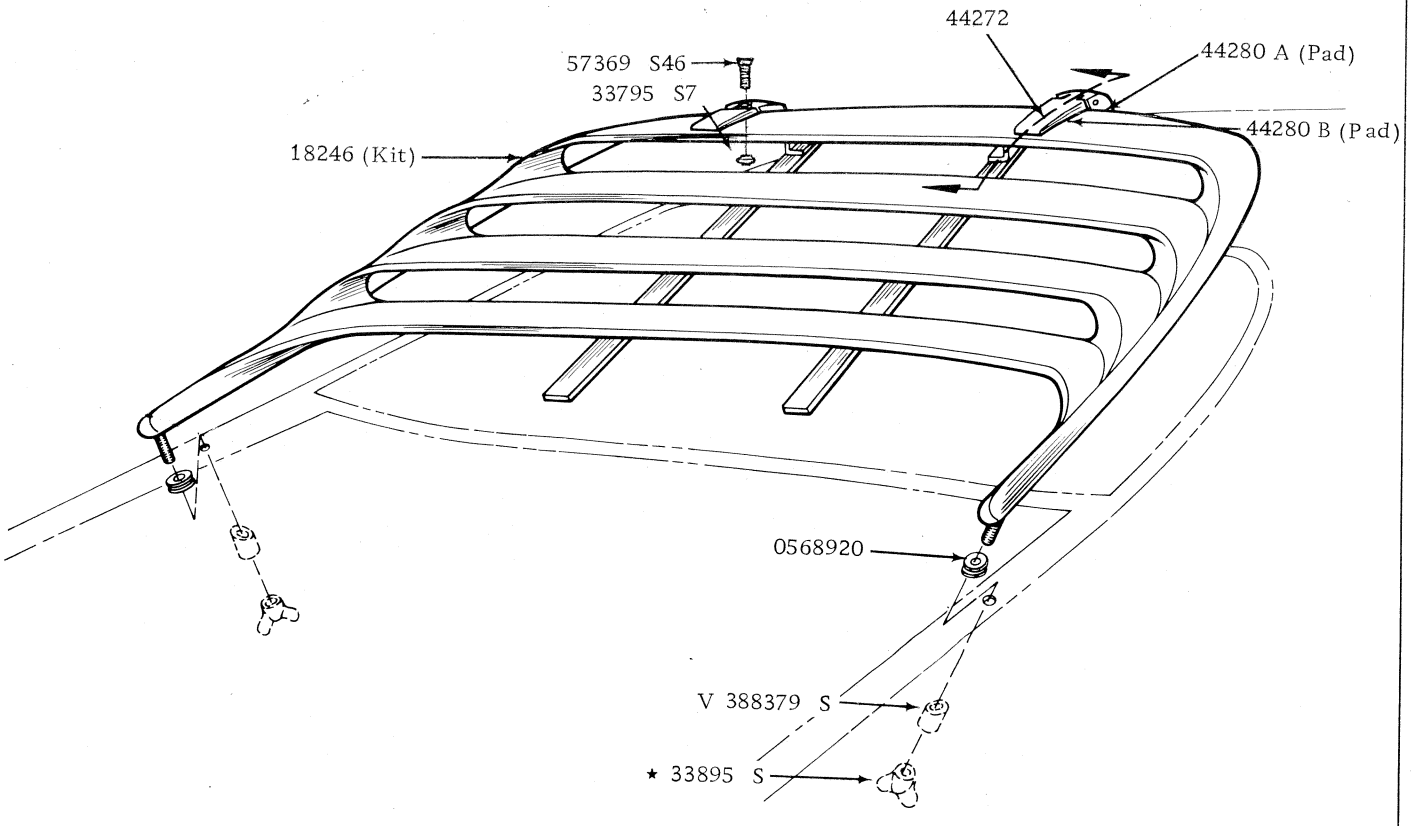

EXTERIOR VENETIAN - BODY TYPE 65

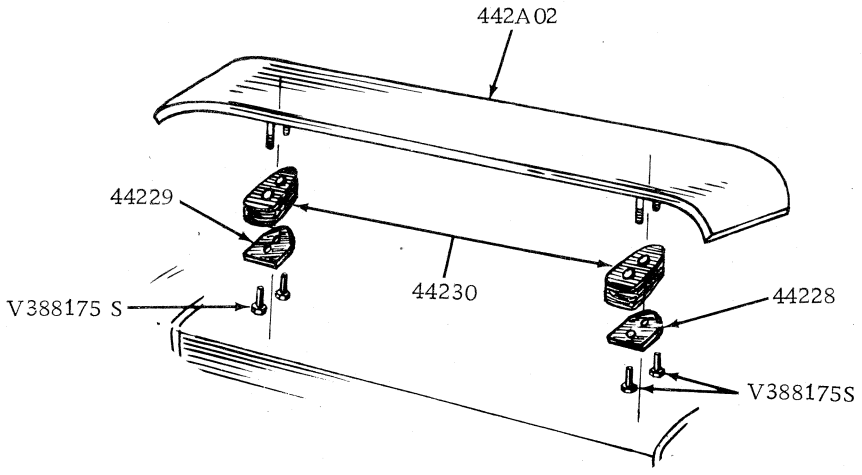

REAR SPOILER

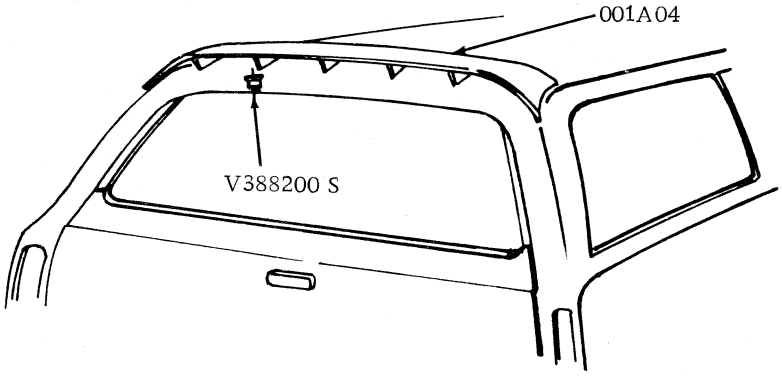

AIR DEFLECTOR WAGON

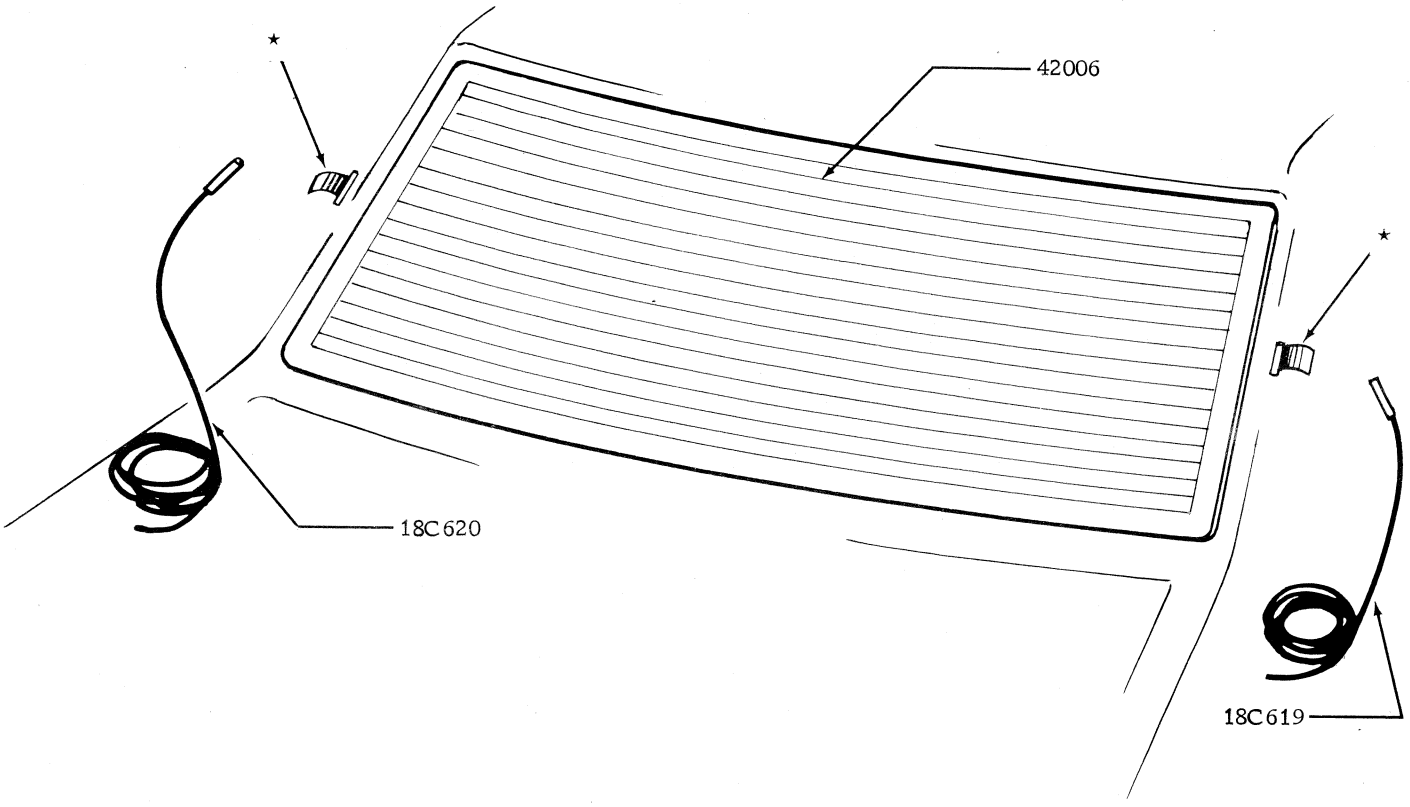

HEATED REAR WINDOW INSTALLATION

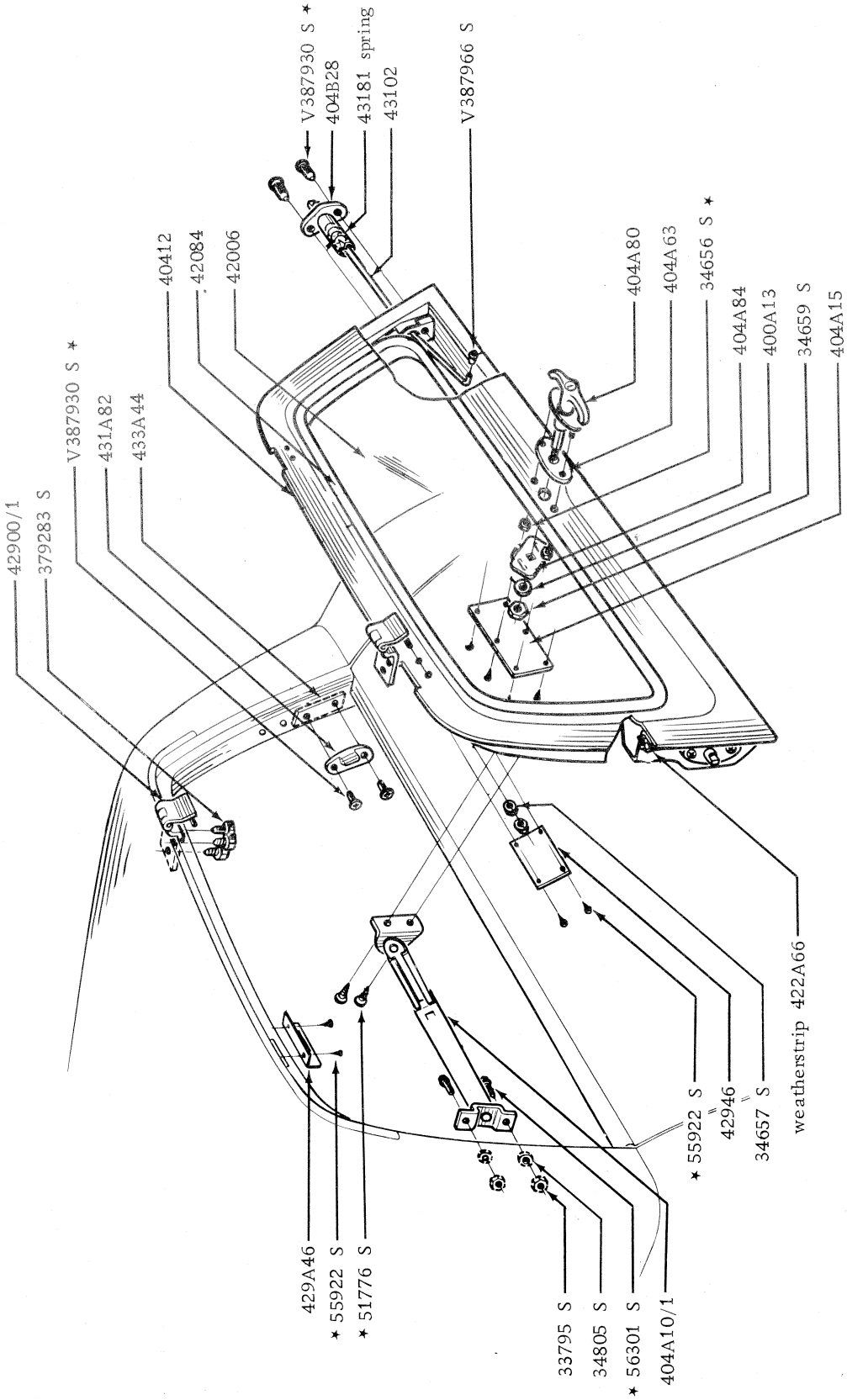
V387930 S ★
404B28
43181 spring
43102
V387966 S
40412
42084
42006
404A80
404A63
34656 S ★
404A84
400A13
34659 S
404A15
42900/1
379283 S
V387930 S ★
431A82
433A44
weatherstrip 422A66
★ 55922 S
42946
34657 S
429A46
★ 55922 S
★ 51776 S
33795 S
34805 S
★ 56301 S
404A10/1

MODEL	BODY TYPE	REMARKS	UNIT	PART NUMBER
– – 502H01 – – SCREW – SUN ROOF				
XA/B, ZF/G	54, 65		25	XW 54 502H01 A
– – 50202 – – PANEL – ROOF				
XA/B, ZF/G	54		1	XA 54 50202 A
XA/B	65		1	XA 65 50202 A
XA/B	66		1	XA 66 50202 A
XA/B	71		1	XA 71 50202 A
XA/B	78		1	XA 78 50202 A
– – 502A02 – – KIT – SLIDING SUNROOF				
XA,ZF	54, 65	To 12/72	1	ARC9DB 54 502A02 A
– –' 502H02 – – SCREW – SUN ROOF				
XA/B, ZF/G	54, 65		2	XW 54 502H02 A
– – 502H03 – – SCREW – SUN ROOF				
XA/B, ZF/G	54, 65		4	XW 54 502H03 A
– – 502H04 – – LOCKWASHER – SUN ROOF				
XA/B, ZF/G	54, 65		1	XW 54 502H04 A
– – 502H05 – – SAFETY PLATE – SUN ROOF				
XA/B, ZF/G	54,65		1	XW 54 502H05 A
– – 502C06/7 – – GUIDE RAIL – SUN ROOF				
XA/B, ZF/G	54, 65	R.H.	1	XW 54 502C06 A
XA/B, ZF/G	54, 65	L.H.	1	XW 54 502C07 A
– – 502H06 – – NUT – SPRING SUN ROOF				
XA/B, ZF/G	54, 65		1	XW 54 502H06 A
– – 502H07 – – SCREW – SUN ROOF				
XA/B, ZF/G	54, 65		1	XW 54 502H07 A
– – 502B08/9 – – PAD – HEADER SUN ROOF				
XA/B, ZF/G	54, 65	R.H.	1	XW 54 502B08 A
XA/B, ZF/G	54, 65	L.H.	1	XW 54 502B09 A
– – 502H08 – – SCREW – SUN ROOF				
XA/B, ZF/G	54, 65		2	XW 54 502H08 A
– – 502H09 – – SCREW – SUN ROOF				
XA/B, ZF/G	54, 65	Oval head – countersunk – O.N.R.	a/r	XW 54 502H09 A
– – 502A10 – – SUPPORT – FRAME TO BODY SIDE INNER FRONT				
XA,ZF	54, 65	Sun roof – to 3/73 – O.N.R.	4	XA 54 502A10 B
XA/B, ZF/G	54	Sun roof – from 3/73 – O.N.R.	4	XA 54 502A10 B
– – 502B10 – – PAD – HEADER – SUN ROOF				
XA/B, ZF/G	54, 65	Centre	1	XW 54 502B10 A
– – 502A11 – – SUPPORT – FRAME TO BODY SIDE OUTER				
XA/B, ZF/G	54, 65	Sun roof	2/4	XA 54 502A11 B
XA/B	65	Sun roof – to 3/73	2	XA 65 502A11 A
– – 502K11 – – STRIP – PLASTIC SUN ROOF				
XA/B, ZF/G	54, 65		1	XW 54 502K11 A
– – 502A12 – – SUPPORT – FRAME TO BODY FRONT				
XA	65	Sun roof	1	XA 54 502A12 A
– – 502C12 – – VELVET – SEALER – SUN ROOF				
XA/B, ZF/G	54, 65	Black large	1	XW 54 502C12 A
XA/B, ZF/G	54, 65	Black small	1	XW 54 502C12 B
– – 502A14 – – BRACKET – FRAME TO BODY SIDE REAR INNER				
XA	65	R.H. – sun roof	1	XA 54 502A14 A
XA	65	L.H. – sun roof	1	XA 54 502A15 A
– – 502L14 – – BRACKET – FIXING SUN ROOF				
XA/B, ZF/G	54, 65		7	XW 54 502L14 A
– – 502L15 – – SUPPORT – FRONT SUN ROOF				
XA/B, ZF/G	54, 65		1	XW 54 502L15 A

MODEL	BODY TYPE	REMARKS	UNIT	PART NUMBER
— — 502L16/7 — — GUIDE — SUN ROOF				
XA/B, ZF/G	54, 65	R.H. — upper elbow	1	XW 54 502L16 A
XA/B, ZF/G	54, 65	R.H. — lower elbow	1	XW 54 502L16 B
XA/B, ZF/G	54, 65	R.H. — front	1	XW 54 502L16 C
XA/B, ZF/G	54, 65	R.H. — outer front rail	1	XW 54 502L16 D
XA/B, ZF/G	54, 65	L.H. — upper elbow	1	XW 54 502L17 A
XA/B, ZF/G	54, 65	L.H. — lower elbow	1	XW 54 502L17 B
XA/B, ZF/G	54, 65	L.H. — front	1	XW 54 502L17 C
XA/B, ZF/G	54, 65	L.H. — outer front rail	1	XW 54 502L17 D
XA/B, ZF/G	54, 65	Inner front rail	2	XW 54 502L16 E
— — 502C19 — — DRIVING HOUSING — SUN ROOF				
XA/B, ZF/G	54, 65		1	XW 54 502C19 A
— — 502L19 — — RAIL — RETAIN HEAD LINING SUN ROOF				
XA/B, ZF/G	54, 65		1	XW 54 502L19 A
— — 502B20 — — GUIDE ASSY. — REAR WITH CABLE & LIFTER — SUN ROOF				
XA/B, ZF/G	54, 65	R.H.	1	XW 54 502B20 B
XA/B, ZF/G	54, 65	L.H.	1	XW 54 502B20 A
— — 502K20 — — TRAY ASSY. — SLIDING SUN ROOF				
XA/B, ZF/G	54, 65		1	XA 54 502K20 A
— — 502L26 — — CLIP — RETAINING — SUN ROOF				
XA/B, ZF/G	54, 65		1	XW 54 502L26 A
— — 502K30 — — HANDLE — CUP PLASTIC — SUN ROOF				
XA/B, ZF/G	54, 65		1	XW 54 502K30 A
— — 502L31 — — PANEL — CUP PLASTIC RETAINING				
XA/B, ZF/G	54, 65		1	XW 54 502L31 A
— — 50232/3 — — PANEL — ROOF EXTENSION				
XA/B	66	R.H.	1	XA 66 50232 A
XA/B	66	L.H.	1	XA 66 50233 A
— — 502K33 — — CLIP — HOSE — SUN ROOF				
XA/B, ZF/G	54, 65		4	XW 54 502K33 A
— — 502B40 — — POST — RETAINING CABLE — SUN ROOF				
XA/B, ZF/G	54, 65		1	XW 54 502B40 A
— — 50244 — — REINFORCEMENT ASSY. — ROOF PANEL				
XA/B, ZF/G	54, 71	Centre	1	XA 54 50244 A
XA/B	65	Centre	1	XA 65 50244 A
XA/B	71	Rear	3	XA 71 50244 A
— — 502K47 — — ESCUTCHEON ASSY. — SUN ROOF				
XA/B, ZF/G	54,,65		1	XW 54 502K47 A
— — 502K49 — — CRANK ASSY. — SUN ROOF				
XA/B, ZF/G	54, 65		1	XW 54 502K49 A
— — 502C50 — — WEATHERSTRIP — SUN ROOF				
XA/B, ZF/G	54, 65		1	XW 54 502C50 A
— — 502C52/3 — — HOSE — SUN ROOF				
XA/B, ZF/G	54, 65	Small	2	XW 54 502C52 A
XA/B, ZF/G	54, 65	Large	2	XW 54 502C53 A
— — 502K73 — — FRAME — HEAD LINING — SUN ROOF				
XA/B, ZF/G	54, 65		1	XW 54 502K73 A
— — 502K74 — — REINFORCEMENT — RAIL ASSY. — SUN ROOF				
XA/B, ZF/G	54, 65		1	XW 54 502K74 A
— — 502L82 — — PANEL — COVER — SUN ROOF				
XA/B, ZF/G	54, 65		1	XW 54 502L82 A

MODEL	BODY TYPE	REMARKS	UNIT	PART NUMBER
– – 50906 – – RETAINER – ROOF RAIL REAR TRIM				
XB	78B	Use to attach 50984 to roof	1	XB 78 50906 A*
– – 50912 – – EXTENSION – ROOF HEADLINING – REAR RETAINING STRIP				
XB	78B		1	XB 78 50912 A*
– – 50924 – – STRIP – REAR ROOF HEADLINING RETAINER				
XB	78B	O.R.C. (1) XB 78 50984 AB1P, (1) XB 78 50906 A	1	XB 78 50924 A
– – 50966 – – RETAINER – ROOF HEADLINING STRIP				
XA/B, ZF/G	All exc. 65		1	XA 54 50966 A
XA/B	65		1	XA 65 50966 A
XA/B, ZF/G	All	Screw – .168/.162 dia. c/rec. head. retainer to panel w/shield header (6), to reinf. front body upper pillar (4)	10	AR 387023 S8
– – 50984 – – RETAINER ASSY. – ROOF RAIL REAR TRIM				
XB	78B		1	XB 78 50984 AB1P*
XB	78B	Washer – finish – attach retainer to h/lining	8	34877 S13*
– – 50998 – – BRACKET – ROOF HEADLINING – SIDE				
XB	78B		10	XB 78 50998 A
– – 51026 – – CLIP – HEADLINING RETAINING				
XA/B	54	With sun roof – from 12/72	1	XA 54 51026 A
– – 51222/3 – – WEATHERSTRIP ASSY. – ROOF SIDE RAIL FRONT				
XA, ZF	54, 71	R.H. – black	1	XA 54 51222 AF1A
XA, ZF	54, 71	R.H. – blue	1	XA 54 51222 AF1B
XA, ZF	54, 71	R.H. – parchment – to 2/73	1	XA 54 51222 AD1E
XA, ZF	54, 71	R.H. – parchment – from 2/73	1	XA 54 51222 AF1E
XA, ZF	54, 71	R.H. – saddle – to 2/73	1	XA 54 51222 AD1F
XA, ZF	54, 71	R.H. – saddle – from 2/73	1	XA 54 51222 AF1F
XA, ZF	54, 71	R.H. – white	1	XA 54 51222 AF1H
XA, ZF	54, 71	R.H. – burgundy – to 2/73	1	XA 54 51222 AD1J
XA, ZF	54, 71	R.H. – burgundy – from 2/73	1	XA 54 51222 AF1J
XA	65	R.H. – to 7/73	1	XA 65 51222 A
XA/B	65	R.H. – from 7/73	1	XB 65 51222 A
XA	66, 78	R.H. – to 7/73	1	XA 66 51222 A
XA/B	66, 78	R.H. – from 7/73	1	XB 66 51222 A
XB, ZG	54, 71	R.H. – black	1	XB 54 51222 AA1A
XB, ZG	54, 71	R.H. – parchment	1	XB 54 51222 AA1E
XB, ZG	54, 71	R.H. – saddle	1	XB 54 51222 AA1F
XB, ZG	54, 71	R.H. – white	1	XB 54 51222 AA1H
XB, ZG	54, 71	R.H. – Chamois	1	XB 54 51222 AA1Q
XB, ZG	54, 71	R.H. – dark brown	1	XB 54 51222 AA1V
XB, ZG	54, 71	R.H. – brown	1	XB 54 51222 AA2V
XA, ZF	54, 71	L.H. – black – to 2/73	1	XA 54 51223 AD1A
XA, ZF	54, 71	L.H. – black – from 2/73	1	XA 54 51223 AF1A
XA, ZF	54, 71	L.H. – blue – to 2/73	1	XA 54 51223 AD1B
XA, ZF	54, 71	L.H. – blue – from 2/73	1	XA 54 51223 AF1B
XA, ZF	54, 71	L.H. – parchment	1	XA 54 51223 AF1E
XA, ZF	54, 71	L.H. – white	1	XA 54 51223 AF1H
XA, ZF	54, 71	L.H. – burgundy	1	XA 54 51223 AF1J
XA	65	L.H. – to 7/73	1	XA 65 51223 A
XA	65	L.H. – from 7/73	1	XA 65 51223 B
XB	65	L.H.	1	XB 65 11223 A
XA	66, 78	L.H. – to 7/73	1	XA 66 51223 A
XA	66, 78	L.H. – from 7/73	1	XA 66 51223 B
XB	66, 78	L.H.	1	XB 66 51223 A
XB, ZG	54, 71	L.H. – black	1	XB 54 51223 AA1A
XB, ZG	54, 71	L.H. – parchment	1	XB 54 51223 AA1E
XA/B, ZF/G	54, 71	L.H. – saddle	1	XB 54 51223 AA1F
XB, ZG	54, 71	L.H. – white	1	XB 54 51223 AA1H
XB, ZG	54, 71	L.H. – chamois	1	XB 54 51223 AA1Q
XB, ZG	54, 71	L.H. – dark brown	1	XB 54 51223 AA1V
XB, ZG	54, 71	L.H. – brown	1	XB 54 51223 AA2V
XB	54A,B,C	Pin – drive – attach w/strip to retainer	2	382570 S
– – 512A24/5 – – SUPPORT ASSY. – WEATHERSTRIP FRONT DOOR SIDE RAIL				
XA/B, ZF/G	54, 71	R.H.	1	XA 54 512A24 A
XA/B, ZF/G	54, 71	L.H.	1	XA 54 512A25 A
XA/B, ZF/G	54, 71	Screw – No. 8 – 18 x 3/8"	2	52720 S8

MODEL	BODY TYPE	REMARKS	UNIT	PART NUMBER
— — 51238/9 — — RETAINER ASSY. — ROOF RAIL WEATHERSTRIP				
XA/B	65	R.H. — O.R.C. (1) XA-65-513A66-AC, (1) D1AB-65-222B08-A	1	XA 65 51238 A
XA/B	66, 78	R.H. — O.R.C. (1) XA-66-513A66-A, (1) D1AZ-65-222B08-A, (1) D1ZZ-65-222A44-A	1	XA 66 51238 A
XA/B	65	L.H.	1	XA 65 51239 A
XA/B	66, 78	L.H. — O.R.C. (1) XA-66-513A67-A, (1) D1AZ-65-222B08-A, (1) D1ZZ-65-222A44-A	1	XA 66 51239 A
— — 512A70 — — SUPPORT ASSY. — ROOF FRONT				
XA/B	78A		1	XA 78 512A70 A
XB	78B		1	XB 78 512A70 A*
— — 512A72/3 — — BRACKET — ROOF FRONT SUPPORT EXTENSION				
XA/B	78	R.H.	1	XA 78 512A72 A
XA/B	78	L.H.	1	XA 78 512A73 A
— — 512A78 — — SUPPORT ASSY. — ROOF REAR				
XA/B	78		2	XA 78 512A78 A
— — 513A12/3 — — RAIL — ROOF SIDE OUTER FRONT				
XA/B, ZF/G	54	R.H.	1	XA 54 513A12 A
XA/B	65	R.H.	1	XA 65 513A12 A
XA/B	66, 78	R.H.	1	XA 66 513A12 A
XA/B	71	R.H.	1	XA 71 513A12 A
XA/B, ZF/G	54	L.H.	1	XA 54 513A13 A
XA/B	65	L.H.	1	XA 65 513A13 A
XA/B	66, 78	L.H.	1	XA 66 513A13 A
XA/B	71	L.H.	1	XA 71 513A13 A
— — 513A16/7 — — RAIL — ROOF SIDE OUTER REAR				
XA/B, ZF/G	54	R.H.	1	XA 54 513A16 A
XA/B	65	R.H.	1	XA 65 513A16 A
XA/B	71	R.H.	1	XA 71 513A16 A
XA/B, ZF/G	54	L.H.	1	XA 54 513A17 A
XA/B	65	L.H.	1	XA 65 513A17 A
XA/B	71	L.H.	1	XA 71 513A17 A
— — 513A20/1 — — RAIL — ROOF SIDE INNER REAR				
XA/B	54	R.H. — to 12/74	1	XA 54 513A20 A
XB	54	R.H. — from 12/74	1	XB 54 513A20 A*
XA/B	65	R.H.	1	XA 65 513A20 A
XA/B	71	R.H.	1	XA 71 513A20 A
ZF/G	All	R.H.	1	ZF 54 513A20 A
XA/B	54	L.H. — to 12/74	1	XA 54 513A21 A
XB	54	L.H. — from 12/74	1	XB 54 513A21 A*
XA/B	65	L.H. — to 12/74	1	XA 65 513A21 A
XB	65	L.H. — from 12/74	1	XB 65 513A21 A*
XA/B	71	L.H.	1	XA 71 513A21 A
ZF/G	All	L.H. — to 12/74	1	ZF 54 513A21 A
ZG	All	L.H. — from 12/74	1	ZG 54 513A21 A*
— — 513A30/1 — — RAIL — ROOF SIDE INNER FRONT				
XA/B, ZF/G	54	R.H.	1	XA 54 513A30 A
XA/B	65	R.H.	1	XA 65 513A30 A
XA/B	66, 78	R.H.	1	XA 66 513A30 A
XA/B	71	R.H.	1	XA 71 513A30 A
XA/B, ZF/G	54	L.H.	1	XA 54 513A31 A
XA/B	65	L.H.	1	XA 65 513A31 A
XA/B	66, 78	L.H.	1	XA 66 513A31 A
XA/B	71	L.H.	1	XA 71 513A31 A
— — 513A34/5 — — EXTENSION — ROOF SIDE INNER RAIL				
XA/B	65	R.H.	1	XA 65 513A34 A
XA/B	65	L.H.	1	XA 65 513A35 A
— — 513C34/5 — — MOULDING — ROOF SIDE RAIL FINISH				
XA/B	78B	R.H. — inner — paint to suit	1	XA 78 513C34 AP
XA/B	78B	L.H. — inner — paint to suit	1	XA 78 513C35 AP
XA/B	78	Screw — att. mldg. to 27850/1	8	52342 S
— — 513A38/9 — — RAIL ASSY. — ROOF SIDE INNER FRONT				
XA	65	R.H. — O.N.R.	1	XA 65 513A38 A
XA	65	L.H. — O.N.R.	1	XA 65 513A39 A

MODEL	BODY TYPE	REMARKS	UNIT	PART NUMBER
– – 513A44/5 – – EXTENSION – ROOF SIDE OUTER REAR RAIL TO WHEELHOUSE				
XA/B	54	R.H.	1	XA 54 513A44 A
XA/B	65	R.H.	1	XA 65 513A44 A
ZF/G	All	R.H.	1	ZF 54 513A44 A
XA/B	54	L.H.	1	XA 54 513A45 A
XA/B	65	L.H.	1	XA 65 513A45 A
ZF/G	All	L.H.	1	ZF 54 513A45 A
– – 513A46/7 – – EXTENSION RAIL – ROOF SIDE OUTER REAR				
XA/B, ZF/G	54	R.H.	1	XA 54 513A46 A
XA/B	65	R.H.	1	XA 65 513A46 A
XA/B, ZF/G	54	L.H.	1	XA 54 513A47 A
XA/B	65	L.H.	1	XA 65 513A47 A
– – 513A66/7 – – RETAINER ASSY. – ROOF SIDE RAIL W/STRIP				
XA/B	66	R.H.	1	XA 66 513A66 A
XA/B	66	L.H.	1	XA 66 513A67 A
XA/B	65	L.H.	1	XB 65 513A67 A*
XA/B	65	R.H.	1	XA 65 513A66 AC
– – 513A68/9 – – WEATHERSTRIP – ROOF SIDE RAIL REAR				
XA, ZF	54	R.H. – blue	1	XA 54 513A68 AE1B
XA, ZF	54	R.H. – burgundy	1	XA 54 513A68 AC1J
XA/B, ZF/G	54	R.H. – black	1	XB 54 513A68 AA1A
XA/B, ZF/G	54	R.H. – parchment	1	XB 54 513A68 AA1E
XA/B, ZF/G	54	R.H. – saddle	1	XB 54 513A68 AA1F
XA/B, ZF/G	54	R.H. – white	1	XB 54 513A68 AA1H
XB, ZG	54	R.H. – chamois	1	XB 54 513A68 AA1Q
XB, ZG	54	R.H. – dark brown	1	XB 54 513A68 AA1V
XB, ZG	54	R.H. – brown	1	XB 54 513A68 AA2V
XA	71	R.H. – blue	1	XA 71 513A68 AE1B
XA	71	R.H. – burgundy	1	XA 71 513A68 AC1J
XA/B	71	R.H. – black	1	XB 71 513A68 AA1A
XA/B	71	R.H. – parchment	1	XB 71 513A68 AA1E
XA/B	71	R.H. – saddle	1	XB 71 513A68 AA1F
XA/B	71	R.H. – white	1	XB 71 513A68 AA1H
XB	71	R.H. – chamois	1	XB 71 513A68 AA1Q
XB	71	R.H. – dark brown	1	XB 71 513A68 AA1V
XB	71	R.H. – brown	1	XB 71 513A68 AA2V
XA, ZF	54	L.H. – blue	1	XA 54 513A69 AE1B
XA, ZF	54	L.H. – burgundy	1	XA 54 513A69 AE1J
XA/B, ZF/G	54	L.H. – black	1	XB 54 513A69 AA1A
XA/B, ZF/G	54	L.H. – parchment	1	XB 54 513A69 AA1E
XA/B, ZF/G	54	L.H. – saddle	1	XB 54 513A69 AA1F
XA/B, ZF/G	54	L.H. – white	1	XB 54 513A69 AA1H
XB, ZG	54	L.H. – chamois	1	XB 54 513A69 AA1Q
XB, ZG	54	L.H. – dark brown	1	XB 54 513A69 AA1V
XB, ZG	54	L.H. – brown	1	XB 54 513A69 AA2V
XA	71	L.H. – blue	1	XA 71 513A69 AC1B
XA	71	L.H. – burgundy	1	XA 71 513A69 AC1J
XA/B	71	L.H. – black	1	XB 71 513A69 AA1A
XA/B	71	L.H. – parchment	1	XB 71 513A69 AA1E
XA/B	71	L.H. – saddle	1	XB 71 513A69 AA1F
XA/B	71	L.H. – white	1	XB 71 513A69 AA1H
XB	71	L.H. – chamois	1	XB 71 513A69 AA1Q
XB	71	L.H. – dark brown	1	XB 71 513A69 AA1V
XB	71	L.H. – brown	1	XB 71 513A69 AA2V
– – 51700/1 – – MOULDING – ROOF DRIP SIDE				
XA/B, ZF/G	54	R.H.	1	XA 54 51700 A
XA/B	65	R.H.	1	XA 65 51700 A
XA/B	71	R.H.	1	XA 71 51700 A
XA/B	66/78	R.H. – door opening	1	XA 66 51700 A
XA/B	78	R.H. – roof	1	XA 78 51700 AA
XA/B, ZF/G	54	L.H.	1	XA 54 51701 A
XA/B	65	L.H.	1	XA 65 51701 A
XA/B	71	L.H.	1	XA 71 51701 A
XA/B	66, 78	L.H. – door opening	1	XA 66 51701 A
XA/B	78	L.H. – roof	1	XA 78 51701 AA
– – 51704 – – MOULDING – ROOF DRIP REAR				
XA/B	78		1	XA 78 51704 AA

MODEL	BODY TYPE	REMARKS	UNIT	PART NUMBER
– – 51720/1 – – MOULDING – ROOF DRIP SIDE REAR				
XA/B	71	R.H.	1	XA 71 51720 A
XA/B	71	L.H.	1	XA 71 51721 A
– – 51726/7 – – MOULDING – ROOF DRIP SIDE				
XA/B, ZF/G	54	R.H.	1	XA 54 51726 A
XA/B, ZF/G	54	R.H. – with vinyl roof	1	XA 54 51726 B
XA/B	65	R.H.	1	XA 65 51726 A
XA/B	65	R.H. – with vinyl roof	1	XA 65 51726 B
XA/B	66B, 78B	R.H.	1	XA 66 51726 A
XA/B	71	R.H. – front	1	XA 71 51726 A
XA/B, ZF/G	54	L.H.	1	XA 54 51727 A
XA/B, ZF/G	54	L.H. – with vinyl roof	1	XA 54 51727 B
XA/B	65	L.H.	1	XA 65 51727 A
XA/B	65	L.H. – with vinyl roof	1	XA 65 51727 B
XA/B	66B, 78B	L.H.	1	XA 66 51727 A
XA/B	71	L.H. – front	1	XA 71 51727 A
– – 51728/9 – – MOULDING – ROOF DRIP SIDE FINISH – REAR				
XA/B	71	R.H.	1	XA 71 51728 A
XA/B	71	L.H.	1	XA 71 51729 A
– – 51762 – – COVER – ROOF DRIP MOULDING FRONT – CORNER FRONT				
XA/B, ZF/G	54, 66, 71, 78		2/4	B5A 70 51762 A
– – 51916 – – REFER SOFT TRIM SECTION				
– – 51917 – – REFER SOFT TRIM SECTION				
– – 51919 – – COVER – DRIVE HOUSING SUN ROOF				
XA/B, ZF/G	54, 65		1	XW 54 51919 A
– – 519A19 – – COVER – SUN ROOF INTERIOR PANEL				
XA/B, ZF/G	54, 65	O.N.R.	1	XA 54 519A19 A1P
– – 52101/7 – – SUPPORT – ROOF HEADLINING				
XA/B, ZF/G	54, 71	No. 1	1	XA 54 52101 A
XA/B	65	No. 1	1	XA 65 52101 A
XA/B	66	No. 1 – to 5/74	1	XA 66 52101 A
XB	66	No. 1 – from 5/74	1	XA 66 52101 B*
XA	78	No. 1 – to 6/73	1	XA 78 52101 A
XA/B	78	No. 1 – from 6/73 to 5/74	1	XA 78 52101 [illegible]
XB	78	No. 1 – from 5/74	1	XB 78 52101 [illegible]
XA/B, ZF/G	54, 65	With sliding sun roof – use as No. 1, 2, 3	6	XW 54 52102 [illegible]
XA/B, ZF/G	54	No. 2	1	XA 54 52102 [illegible]
XA/B	65	No. 2	1	XA 65 52102 [illegible]
XA/B	65	Sun roof – use as No. 1 & 2	4	XW 54 52102 [illegible]
XA/B	71	No. 2	1	XA 71 52102 [illegible]
XA	78	No. 2 – to 6/73	1	XA 78 52102 A
XA/B	78	No. 2 – from 6/73 to 5/74	1	XA 78 52102 B
XB	78	No. 2 – from 5/74	1	XB 78 52102 A*
XA/B, ZF/G	54	No. 3	1	XA 54 52103 A
XA/B	65	No. 3	1	XA 65 52103 A
XA/B	71	No. 3	1	XA 71 52103 A
XB	78B	No. 3	1	XB 78 52103 A
XA/B, ZF/G	54	No. 4	1	XA 54 52104 A
XA/B, ZF/G	54	No. 4 – sun roof	1	XA 54 521A04 B
XA/B	65	No. 4	1	XA 65 52104 A
XA/B	65	No. 4 – sun roof	1	XA 65 521A04 A
XA/B	71	No. 4	1	XA 71 52104 A
XB	78B	No. 4	1	XB 78 52104 A
XA/B, ZF/G	54	No. 5	1	XA 54 52105 B
XA/B	71	No. 5	1	XA 71 52105 A
XB	78B	No. 5	1	XB 78 52105 A
XA/B	71	No. 6	1	XA 71 52106 A
XB	78B	No. 6	1	XB 78 52106 A
XA/B	71	No. 7	1	XA 71 52107 A
XB	78B	No. 7	1	XB 78 52107 A
– – 52180 – – RETAINER – ROOF HEADLINING SUPPORT REAR				
XA	65	Sliding sun roof – O.N.R.	2	XA 65 52180 A
XA	66	O.N.R.	1	XA 78 52180 A
XA/B	71		2	XA 71 52180 A
XB	78B		2	XB 78 52180 A

MODEL	BODY TYPE	REMARKS	UNIT	PART NUMBER		
– – 52194/5 – – STRIP – ROOF HEADLINING RETAINER REAR LOWER						
XA/B	54	R.H.	1	XA	54	52194 A
ZF/G	All	R.H.	1	ZF	54	52194 A
XA/B	54	L.H.	1	XA	54	52195 A
ZF/G	All	L.H.	1	ZF	54	52195 A
XA/B	65		2	XA	65	52194 A
– – 52196 – – STRIP – HEADLINING RETAINING – ROOF REAR						
XB	78B	O.N.R.	1	XB	78	52196 A
– – 52212 – – RETAINER – HEADLINING SUPPORT						
XA/B, ZF/G	54		1	XA	54	52212 A
XA/B	65		1	XA	65	52212 A
– – 525A66/7 – – SUPPORT – PACKAGE TRAY TO ROOF REAR CORNER						
XA/B	54	R.H. – to 12/74	1	XA	54	525A66 A
XB	54	R.H. – from 12/74	1	XB	54	525A66 A*
XA/B	65	R.H.	1	XA	65	525A66 A
ZF/G	All	R.H.	1	ZF	54	525A66 A
XA/B	54	L.H. – to 12/74	1	XA	54	525A67 A
XB	54	L.H. – from 12/74	1	XB	54	525A67 A*
XA/B	65	L.H. – to 12/74	1	XA	65	525A67 A
XB	65	L.H. – from 12/74	1	XB	65	525A67 A*
ZF/G	All	L.H. – to 12/74	1	ZF	54	525A67 A
ZG	All	L.H. – from 12/74	1	ZG	54	525A67 A*
– – 53700 – – REFER SOFT TRIM SECTION						
– – 54310 – – ABSORBER – ROOF PANEL FRONT – SOUND						
XA/B, ZF/G	54, 65	O.N.R.	1	XA	54	54310 B
XA/B	66	To 5/74	1	XW	54	54310 A
XA/B	71		1	XA	54	54310 A
– – 54322 – – ABSORBER – ROOF PANEL – SOUND						
XA/B	71	Centre	2	XA	71	54322 A
XA/B	71	Centre front	1	XA	71	543A22 A
– – 54330 – – ABSORBER – ROOF PANEL REAR – SOUND						
XA/B, ZF/G	54	O.N.R.	1	XA	54	54330 A
XA/B, ZF/G	54	Sun roof – O.N.R.	1	XA	54	543A30 A
XA/B	65		2	XA	65	54330 A
XA/B	71		1	XA	71	54330 A
XA/B	78	To 5/74	1	XW	54	54330 A

MODEL	BODY TYPE	REMARKS	UNIT	PART NUMBER

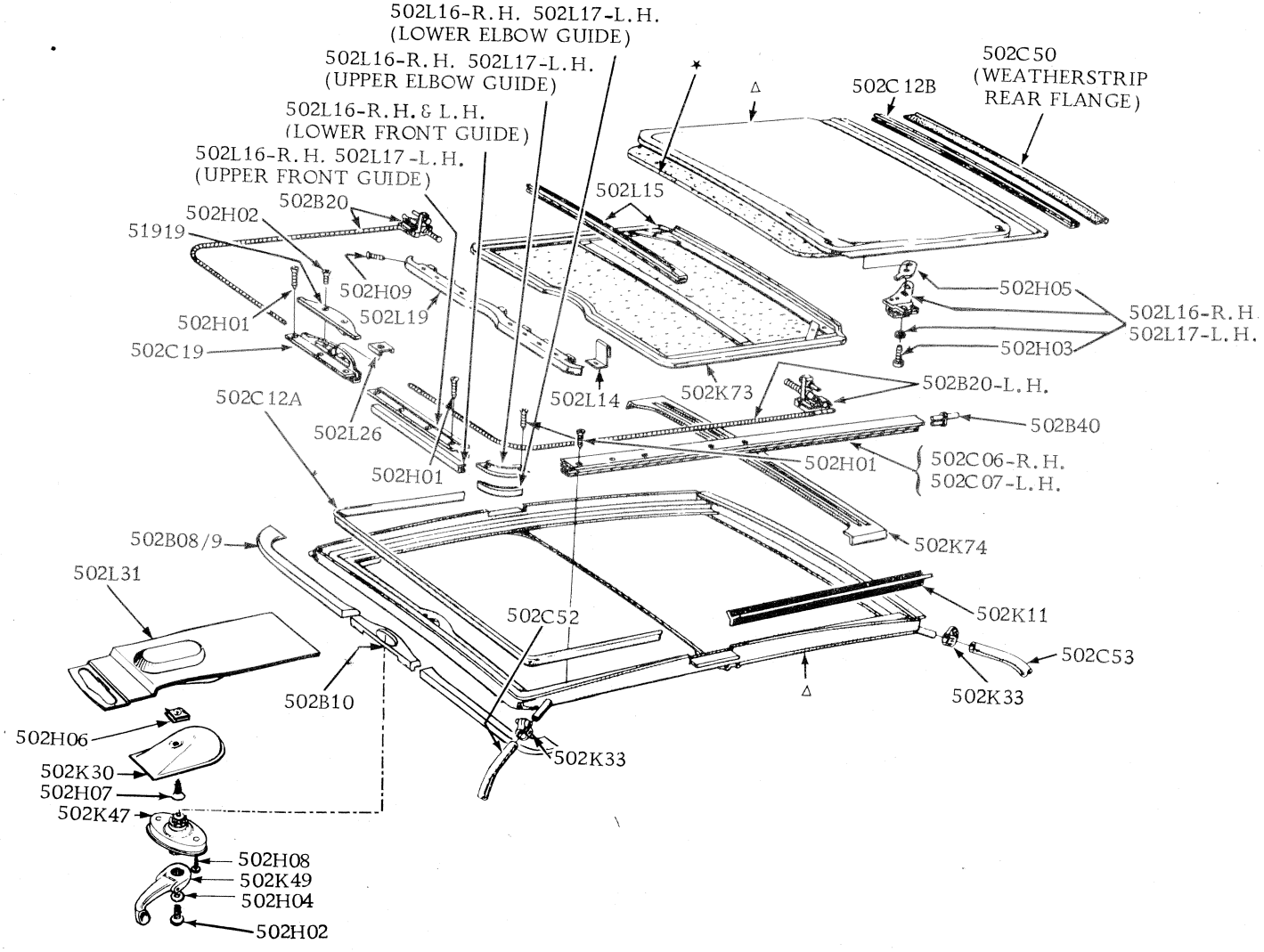

Δ PART OF 502L82 ASSEMBLY.

ALL COMPONENTS ARE PART OF
KIT 502A02

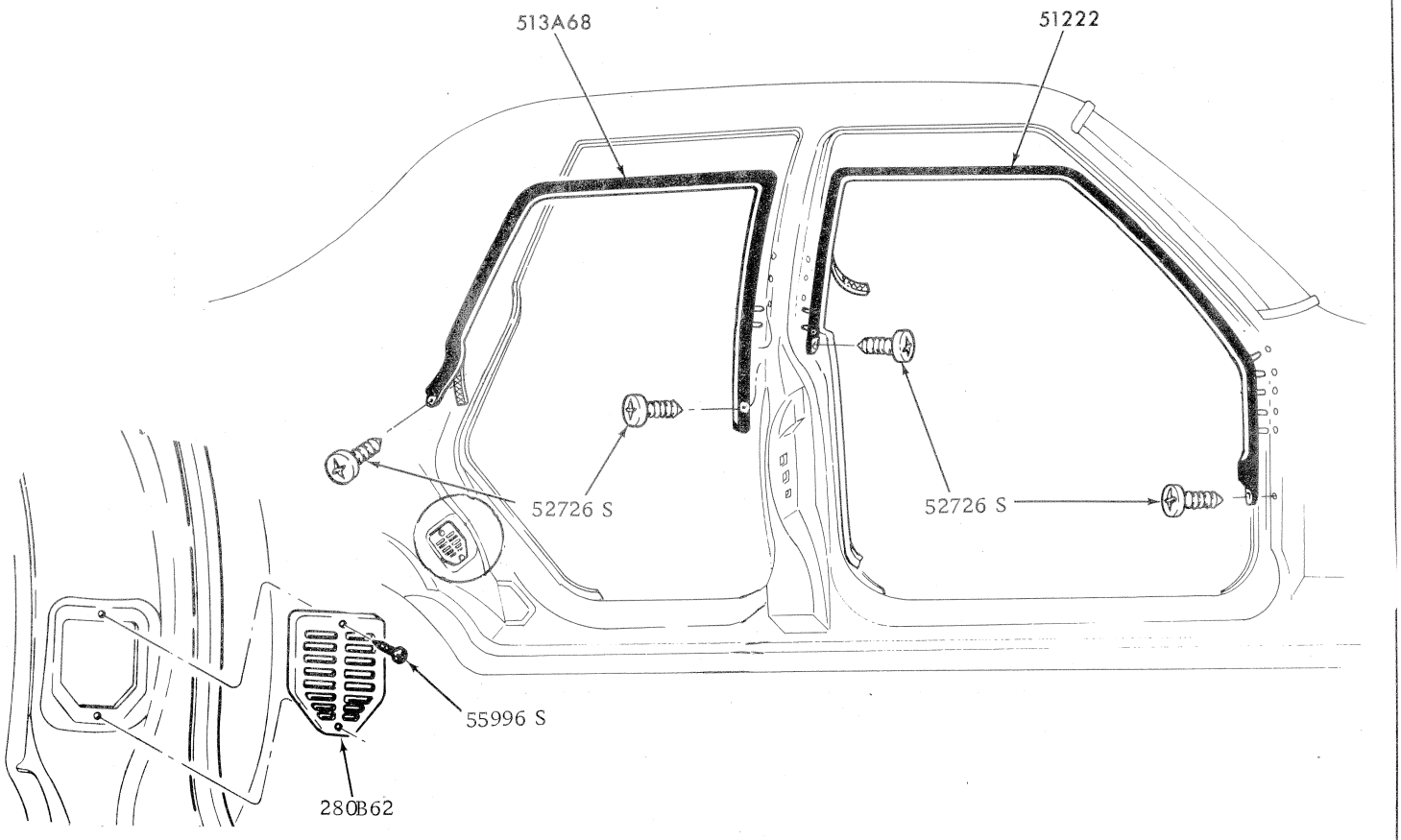

WEATHER STRIPS & AIR VENT GRILLE BODY TYPE 54

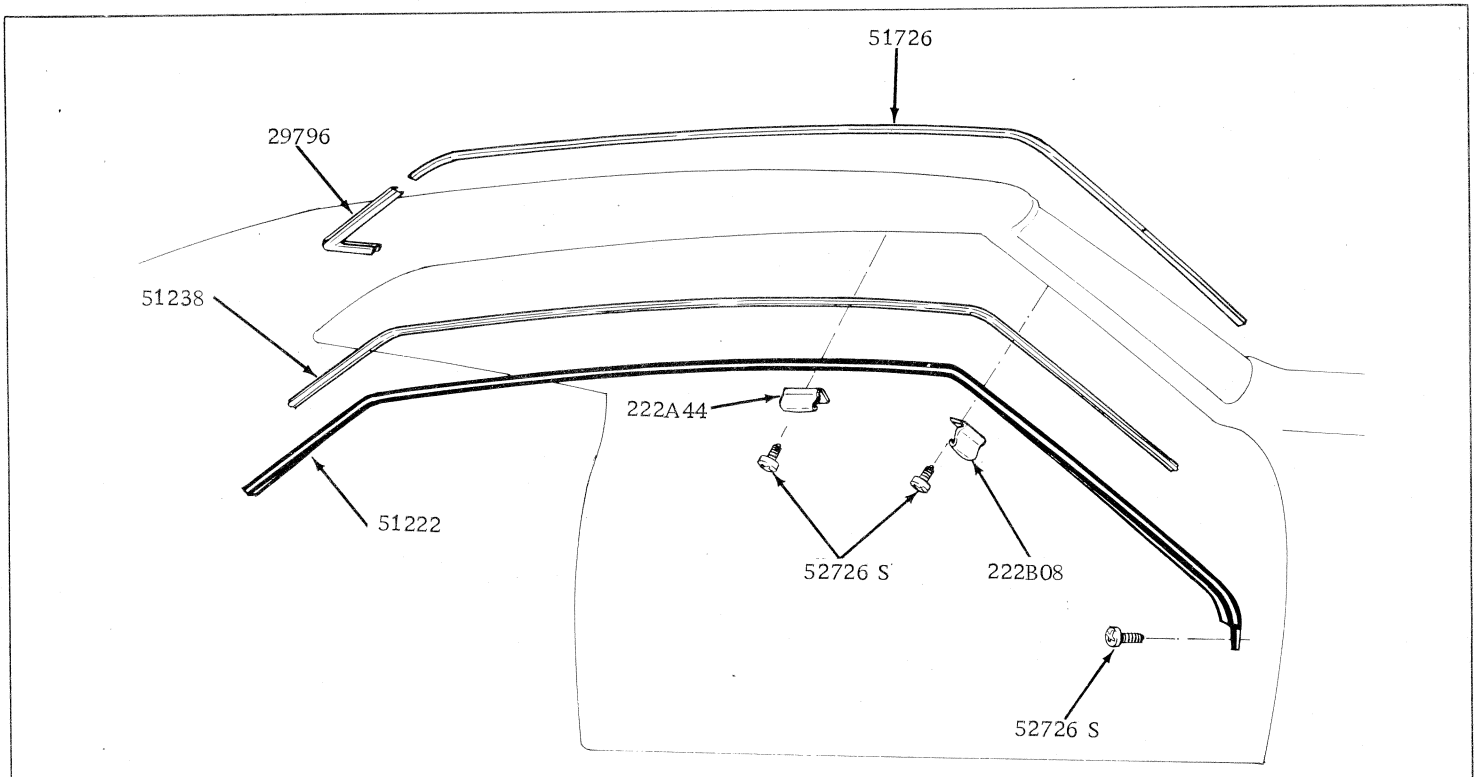

WEATHER STRIPS BODY TYPE 65

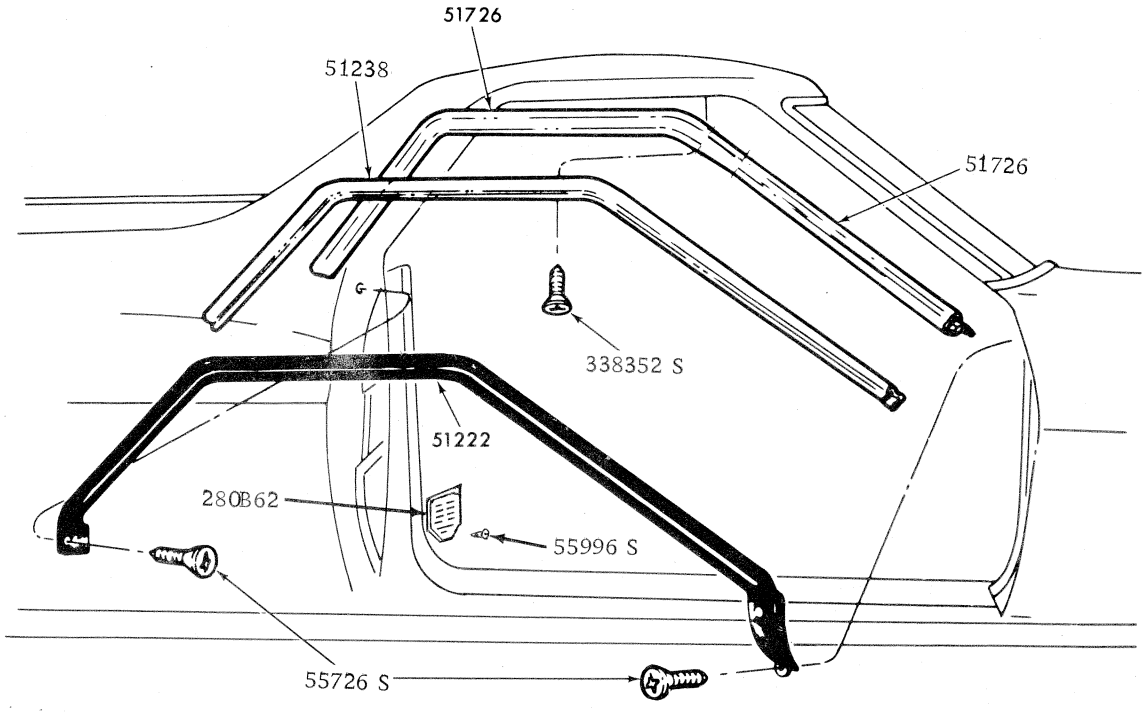

ROOF SIDE MOULDINGS & WEATHERSTRIPS BODY TYPE 66 78

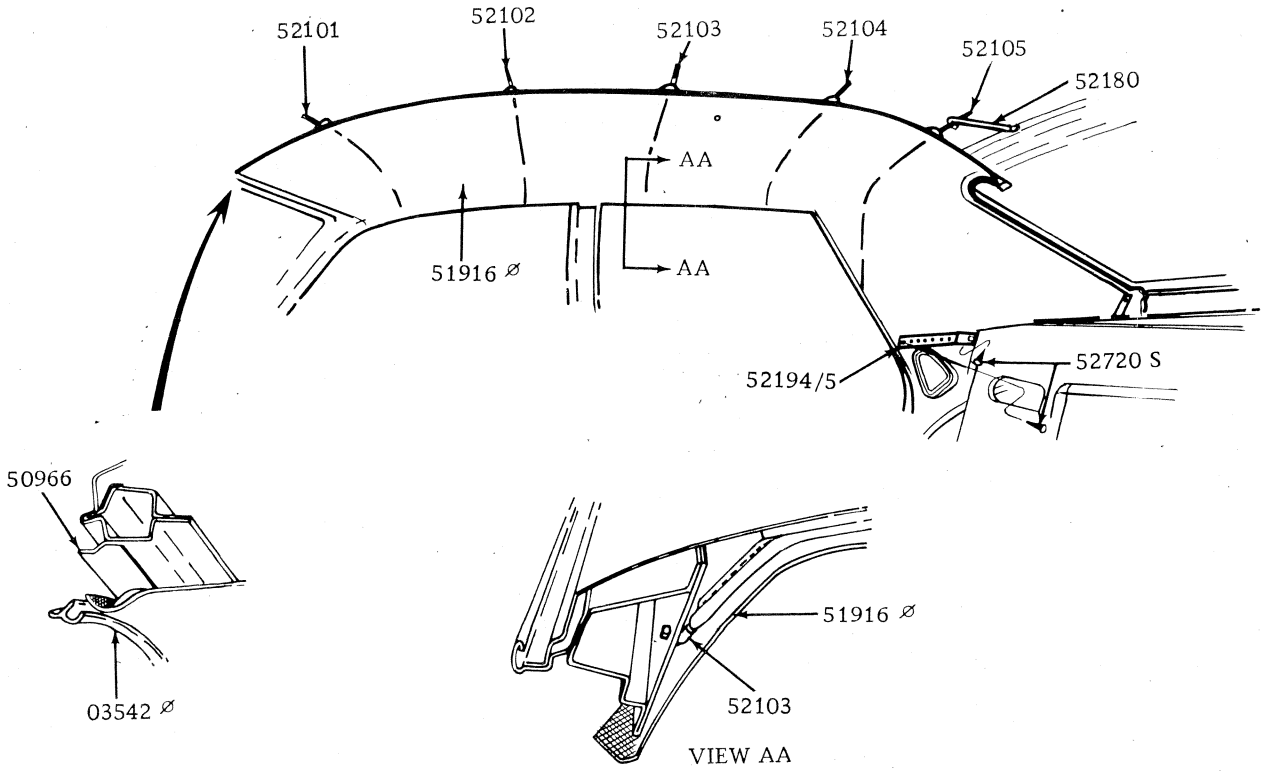

⌀ REFER SOFT TRIM SECTION

HEADLINING, SUPPORTS AND RELATED PARTS

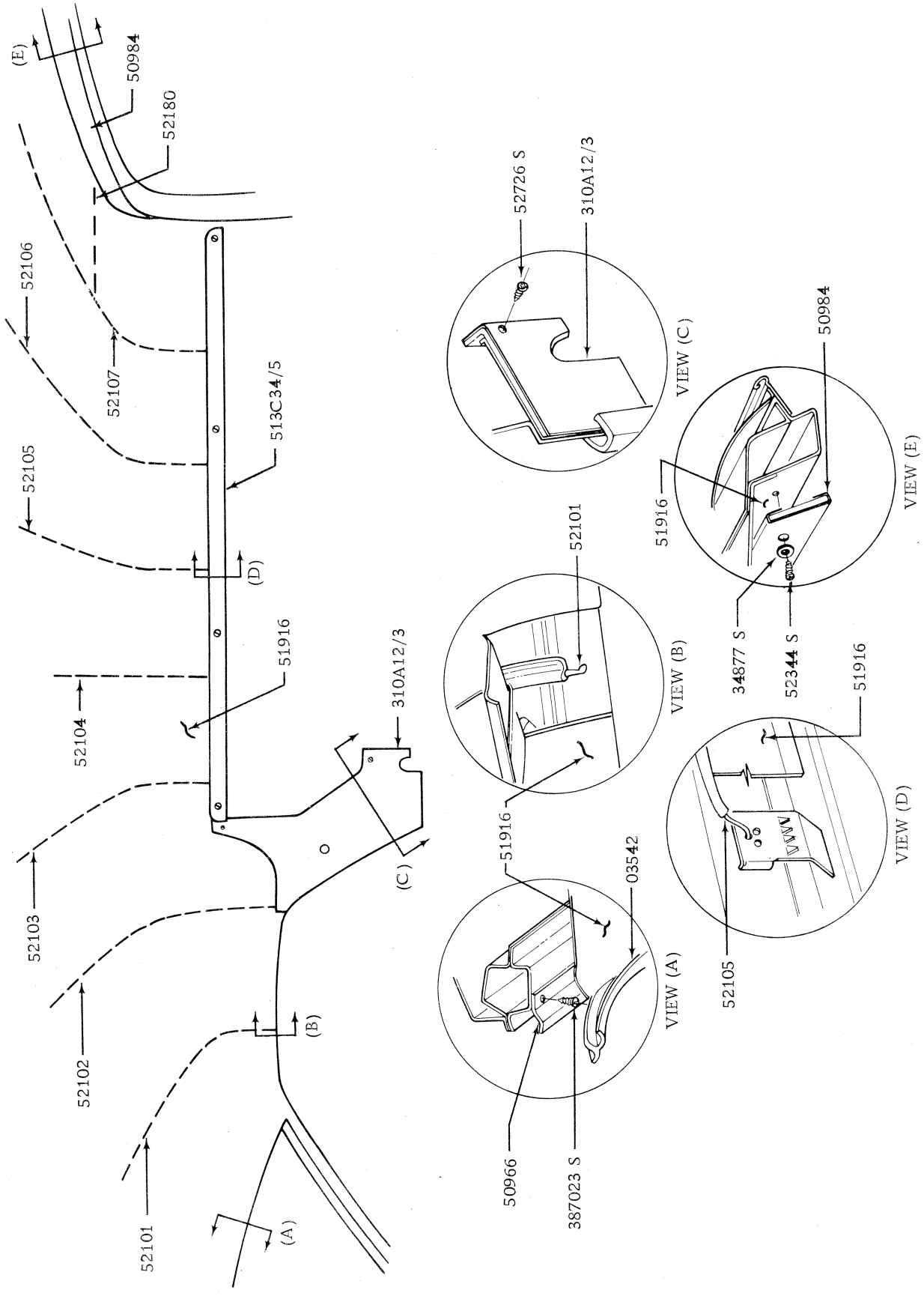

HEADLINING, SUPPORTS AND RELATED PARTS – VAN

MODEL	BODY TYPE	REMARKS	UNIT	PART NUMBER
-- 60004/5 -- REFER SOFT TRIM SECTION				
-- 60032 -- REFER SOFT TRIM SECTION				
-- 600A46 -- REFER SOFT TRIM SECTION				
-- 60050/1 -- REFER SOFT TRIM SECTION				
-- 600A74 -- BRACKET - AUX. SEAT BACK SUPPORT				
XB	71		2	XB 71 600A74 A
-- 600A76/7 -- SUPPORT - AUX. SEAT BACK				
XB	71	R.H.	1	XB 71 600A76 A
XB	71	L.H.	1	XB 71 600A77 A
-- 600B76 -- PIN - AUX. SEAT BACK SUPPORT PIVOT				
XB	71		2	XB 71 600B76 A
-- 60080 -- REFER SOFT TRIM SECTION				
-- 60100 -- REINFORCEMENT ASSY. - SEAT BELT ANCHOR TO FLOOR PAN				
XA/B, ZF/G	All		2	XY 54 60100 AA
-- 60114 -- REINFORCEMENT - SEAT BACK SUPPORT RAIL				
XA/B	71		1	XA 71 60114 A
-- 60136/7 -- REFER SOFT TRIM SECTION				
-- 602A10 -- CLIP - SEAT BELT STOWAGE ATTACHING WITH STD. BELTS				
XA, ZF	54, 71	To 3/73	8	XA 54 602A10 A
XA	66, 78	To 3/73	4	XA 54 602A10 A
XA	65	To 2/73	8	XA 54 602A10 A
XA, ZF	All	Screw - No. 6 - 32 - attach stowage to clip	8	52936 S36
-- 60310 -- SPACER - FRONT SEAT BACK AND CUSHION				
XA, ZF	All	Bucket seats - to 10/72	4	CH 65 60310 AB
-- 60340/1 -- RECLINING MECHANISM ASSY. - FRONT SEAT				
XA/B, ZF/G	54, 66, 71, 78	R.H.	1	CH F 60340 AA
XA/B	65	R.H.	1	XA 65 60340 A
XA/B, ZF/G	54, 66, 71, 78	L.H.	1	CH F 60341 AA
XA/B	65	L.H.	1	XA 65 60341 A
XA, ZF	All	Bolt - special shoulder - 60340/1 to 60136/60050	8	V 388233 S2
XA, ZF	All	Bolt - 3/8" - 16 x 1" - from 10/72 - recliner to seat cushion frame	4	304684 S2
-- 60342/3 -- FINISHER - RECLINING MECHANISM FRONT SEAT				
XA/B, ZF/G	All	R.H.	1	CH 65 60342 AA
XA/B, ZF/G	All	L.H.	1	CH 65 60343 AA
-- 60392 -- BOLT - FRONT SEAT BACK PIVOT ARM				
XA/B	65		4	CH 65 60392 AA
-- 60508 -- PANEL ASSY. - REAR SEAT BACK FLOOR				
XA/B	71		1	XA 71 60508 AP
XA/B	71	Washer - 7/16" wave	1	356383 S7
XA/B	71	Shoulder screw - pivot - att. lever to panel assy.	1	V 387659 S42
-- 605A14 -- LATCH - REAR SEAT BACK				
XA/B	71	To 6/74	1	XT 71 605A14 A
XB	71	From 6/74	2	XB 71 605A14 A*
-- 605A15 -- SPRING - SEAT BACK LATCH				
XA/B	71		2	XT 71 605A15 A
XA/B	71	Retainer spring - O.N.R.	2	74274 S
-- 605A16 -- BUMPER - REAR SEAT BACK				
XA/B	71		a/r	XA 71 605A16 C
-- 60542/3 -- SIDE ARCH WIRE - FRONT SEAT CUSHION - BENCH SEAT				
XA/B, ZF/G	54, 66, 71, 78	R.H.	1	ARC6DB 54 60542 A
XA/B, ZF/G	54, 66, 71, 78	L.H.	1	ARC6DB 54 60543 A

MODEL	BODY TYPE	REMARKS	UNIT	PART NUMBER
– – 60762 – – REFER SOFT TRIM SECTION				
– – 607A62 – – BRACKET ASSY. – LINK TO FLOOR				
XB	71	R.H. – with aux. rear seats	1	XB 71 607A62 A
XB	71	L.H. – with aux. rear seats	1	XB 71 607A62 B
– – 60786 – – BRACKET – AUX. SEAT CUSHION SUPPORT				
XB	71	Front	2	XB 71 60786 A
XB	71	Rear	2	XB 71 60786 B
XB	71	R.H.	2	XB 71 60786 C
XB	71	L.H.	2	XB 71 60786 D
– – 608A22 – – REFER SOFT TRIM SECTION				
– – 608B35/6 – – BRACKET – LINK TO FLOOR CONTROL				
XB	71	R.H. – with aux. rear seats – paint to suit	1	XB 71 608B35 A
XB	71	L.H. – with aux. rear seats – paint to suit	1	XB 71 608B36 A
– – 608A84 – – EXTENSION ASSY. – FRONT SEAT BACK SUPPORT ARM				
XA/B	65		1	XA 65 618C04 B
– – 60923 – – STRIP – FLOOR SIDE FINISH				
XB	71	L.H. – rear – with aux. rear seats – O.N.R.	1	XB 71 60923 C
– – 60928 – – HINGE ASSY. – AUX. SEAT BACK TO FLOOR				
XB	71	Front	1	XB 71 60928 A
XB	71	Rear	1	XB 71 60928 B
– – 60940 – – PANEL – AUX. SEAT BACK				
XB	71	Paint to suit	1	XB 71 60940 A
– – 60942 – – BOARD ASSY. – REAR FLOOR				
XB	71	With aux. rear seats	1	XB 71 60942 A
XB	71	Screw – No. 8 – 15 x ¾" – aux. seat back panel	4	52742 S7E
XB	71	Clip – aux. seat back panel – spring	2	AR 387412 S
– – 610A74 – – PLATE – REAR SEAT BELT TO FLOOR ATTACHING				
XA/B	All		2	XT 54 610A74 A
– – 610B75 – – REFER SOFT TRIM SECTION				
– – 611A40/1 – – BRACKET – INERTIA REEL STABILIZING				
XB, ZG	54, 65, 71	R.H. – to 5/74	1	XB 54 611A40 A
XB, ZG	54, 65, 71	R.H. – from 5/74	1	XB 54 611A40 B*
XB, ZG	54, 65, 71	L.H. – to 5/74	1	XB 54 611A41 A
XB, ZG	54, 65, 71	L.H. – from 5/74	1	XB 54 611A41 B*
– – 611B46 – – RETAINER – FRONT SEAT BELT SHIELD				
XB, ZG	All	With bench seat – from 1/75	2	D2AZ 65 611B46 A*
– – 611A70 – – SHIELD – FRONT SEAT BELT				
XB, ZG	All	With bench seat – from 1/75	2	D2AZ 65 611A70 A*
– – 61172 – – REFER SOFT TRIM SECTION				
– – 611B94 – – SUPPORT ASSY. – REAR SEAT BELT RETAINER				
XB	65	From 1/75	2	XB 65 611B94 A*
– – 61198 – – HANDLE – FRONT SEAT BACK ADJUSTING				
XA/B, ZF/G	All	Recl. bucket seats	2	XA 65 61198 A
– – 61201/2 – – REFER SOFT TRIM SECTION				
– – 61216 – – REINFORCEMENT – FRONT SEAT BELT ANCHOR TO SIDEMEMBER				
XA, ZF	All		2	C4SZ 62 61216 A
XB, ZG	All	Except with aux. rear seats	2	C4SZ 62 61216 A
XB	71	Outer – with aux. rear seats	2	XB 71 61216 A
XB	71	Centre – with aux. rear seats	1	XB 71 61216 B
– – 612A72 – – RETAINER – SEAT BELT BUCKLE BAR				
XB	54, 71	From 1/75	2	XB 54 612A72 A*
ZG	All	From 1/75	2	ZG 54 612A72 A*

MODEL	BODY TYPE	REMARKS	UNIT	PART NUMBER
– – 61316/7 – – SUPPORT ASSY. – REAR SEAT BACK				
XA/B	71	R.H.	1	XA 71 61316 AP
XA/B	71	L.H.	1	XA 71 61317 AP
XA/B, ZF/G	71	Washer – No. 10 – ext. tooth support assy. to extension	a/r	34939 S7
– – 613A55 – – CABLE – REAR SEAT BACK LATCH				
XB	71	From 6/74	2	XB 71 613A55 A*
– – 613A57 – – BUMPER STRIKE – REAR SEAT BACK				
XA/B	71		2	XA 71 613A57 A
– – 613A58 – – CABLE & LATCH ASSY. – REAR SEAT BACK				
XA/B	71		2	XA 71 613A58 A
– – 613A77 – – REFER SOFT TRIM SECTION				
– – 61379 – – KNOB – LEVER ARM REAR SEAT LATCH				
XA/B	71		1	XA 71 61379 A
– – 613B84 – – REINFORCEMENT – REAR SEAT BELT ANCHOR TO QTR. BELT				
XA/B	71		1	XA 71 613B84 A
– – 616A08 – – PLATE ASSY. – REAR SEAT BACK SUPPORT ANCHOR				
XA/B	71		2	XA 71 616A08 A
– – 616A40 – – EXTENSION ASSY. – REAR SEAT BACK REAR				
XA/B	71		1	XA 71 616A40 AP
– – 616A47 – – PAD – ANTI RATTLE				
XA/B	71		2	XA 71 616A47 A
– – 616A56 – – MOULDING – FLOOR EXTENSION ON WEAR STRIP				
XA/B	71		2	XA 71 616A56 A
XA/B	71	Screw – No. 8 – 15 x 3/8" – moulding to extension	4	358735 S2
– – 61704/5 – – TRACK ASSY. – FRONT SEAT				
XA/B, ZF/G	All	R.H. – bench seat	1	XY 54 61704 A
XA/B	65	R.H. – outer – bucket seat	1	XY 54 61704 A
XA/B	65	R.H. – inner – bucket seat	1	XA 65 61704 AB
XA/B, ZF/G	All exc. 65	R.H. – drivers seat – bucket seat	1	XA 54 61704 A
XA/B, ZF/G	All exc. 65	R.H. – passenger seat – bucket seat	1	XA 54 61704 B
XA/B, ZF/G	All	L.H. – bench seat	1	XY 54 61705 A
XA/B	65	L.H. – outer – bucket seat	1	XY 54 61705 A
XA/B	65	L.H. – inner – bucket seat	1	XA 65 61705 AA
XA/B, ZF/G	All exc. 65	L.H. – drivers seat – bucket seat	1	XA 54 61705 B
XA/B, ZF/G	All exc. 65	L.H. – passenger seat – bucket seat	1	XA 54 61705 A
XA/B, ZF/G	All	Bolt – 5/16" – 18 x 1.50" – sq. neck – track assy. to floor pan	6	AR 387379 S2
XA/B, ZF/G	All	Screw & washer assy. – fillister hd. – att. track assy. to seat assy.	4	379847 S
– – 61726 – – ROD ASSY. – FRONT SEAT LATCH TIE (REFER 61802)				
– – 61753 – – HANDLE ASSY. – FRONT SEAT TRACK ADJUSTING				
XA/B, ZF/G	All	Bucket seat	2	C0AB 64 61753 A
– – 61782 – – SPACER – FRONT SEAT TRACK				
XA, ZF	54, 66, 71, 78		16	XA 65 61782 A
XA	65	To 7/72	8	XA 65 61782 A
XA/B	65	From 7/72	10	XA 65 61782 B
XA/B	65	From 7/72	4	XA 65 61782 C
XA	65		2	XY 54 61782 AA
– – 61802 – – ROD ASSY. – FRONT SEAT LATCH TIE				
XA/B, ZF/G	All	Bench seat	1	C1DZ 62 61726 A
XA/B, ZF/G	All	Bucket seats	2	ARC6DB 54 61802 B
– – 618C04 – – PIVOT ASSY. – SEAT BACK FRONT SEAT				
XA/B	65B,D,H	65B – passenger only	1	XA 65 618C04 B
– – 61828 – – SPRING – FRONT SEAT TRACK ASSIST				
XA/B, ZF/G	All	Bucket seats	2	C1SB 63 61828 A
XA/B	65		1	XA 65 61828 A

MODEL	BODY TYPE	REMARKS	UNIT	PART NUMBER
– – 61883 – – SPRING – FRONT SEAT TRACK LATCH				
XA/B, ZF/G	All	To 4/73 – bucket seats	2/4	C30B 62 61883 A
XA/B, ZF/G	All	From 4/73 – bucket seats	4	XA 54 61883 A
– – 618B94 – – CABLE ASSY. – FRONT SEAT RELEASE				
XA/B	65D,H		1	XA 65 618B94 A
– – 62184 – – SHIELD – FRONT SEAT CUSHION SIDE				
XA/B	54D	R.H. – Thailand – saddle – paint to suit	1	XA 54 62184 BA1F
XA/B	54D	L.H. – Thailand – saddle – paint to suit – O.N.R.	1	XA 54 62185 BA1F
– – 62188 – – FINISHER – FRONT SEAT RECLINING MECHANISM HANDLE				
XA/B, ZF/G	54A,G,E,H, 65B,D,H, 71D	With bucket seats	2	CH F 62188 AA
– – 62419 – – LEVER ARM – REAR SEAT BACK LATCH				
XA/B	71		1	XA 71 62419 A
– – 62440 – – STRIKER – REAR SEAT BACK LATCH				
XA/B	71	R.H.	1	XA 71 62440 B
XA/B	71	L.H.	1	XA 71 62441 B
– – 62606 – – PAWL – FRONT SEAT BACK LATCH				
XA/B	65B		2	XA 65 62606 A
– – 62614 – – BRACKET – FRONT SEAT BACK LATCH				
XA/B	65B	Upper	2	XA 65 62614 B
– – 62622 – – HANDLE – FRONT SEAT BACK LATCH				
XA/B	65B		2	C8AZ 62 62622 A
– – 62866 – – REFER SOFT TRIM SECTION				
– – 62868 – – RETAINER – FRT. SEAT BACK ASH RECEPTACLE				
XA, ZF	54, 71	Bench seat back	1	XA 54 62868 A
XA/B, ZF/G	All	Console rear	1	XA 54 62868 A
– – 62876 – – RECEPTACLE – FRT. SEAT BACK ASH				
XA, ZF	54, 71	Bench seat – back	1	XA 54 62876 AP
XA/B, ZF/G	All	Console – rear	1	XA 54 62876 AP
– – 62900/1 – – REFER SOFT TRIM SECTION				
– – 629A06 – – REFER SOFT TRIM SECTION				
– – 63100/1 – – SPRING & FRAME ASSY. – FRONT SEAT CUSHION				
XA/B	All	Bench seat	1	XA 54 63100 A
XA/B, ZF/G	All	R.H. – bucket seat – to 1/75	1	XA 65 63100 B
XB, ZG	All	R.H. – bucket seat – from 1/75	1	XB 54 63100 A*
XA/B, ZF/G	54, 66, 71, 78	L.H. – bucket seat – to 1/75	1	XA 65 63101 B
XB, ZG	54, 66, 71, 78	L.H. – bucket seat – from 1/75	1	XB 54 63101 A*
XA/B	65	L.H. – bucket seat – to 1/75	1	XA 65 63101 C
XB	65	L.H. – bucket seat – from 1/75	1	XB 65 63101 A*
XA/B	54D	Thailand only	2	XW 54 63100 B
– – 63112 – – SPRING – FRONT SEAT CUSHION CENTRE				
XA/B, ZF/G	54A,B,C,E, 66A,B, 71A,B, 78A		1	XW 54 63112 A
– – 63120 – – SPRING & FRAME ASSY. – REAR SEAT CUSHION				
XA/B	54	Exc. police & taxi – to 1/75	1	XA 54 63120 A
XB	54	Exc. police & taxi – from 1/75	1	XB 54 63120 A*
XA/B, ZF/G	54	Police & taxi – to 1/75	1	XA 54 63120 B
XB, ZG	54	Police & taxi – from 1/75	1	XB 54 63120 B*
ZF	All	To 5/73	1	ZF 54 63120 A
XA/B, ZF/G	All	From 5/73	1	ZF 54 63120 B
XA/B	65B,D,H	O.N.R.	1	XA 65 63120 A
XA/B	71		1	XA 71 63120 A
– – 63160 – – FRAME ASSY. – REAR SEAT CUSHION				
XA/B	65		1	XA 65 63160 B

MODEL	BODY TYPE	REMARKS	UNIT	PART NUMBER
– – 63166 – – SPRING – FRONT SEAT CUSHION INTERMEDIATE				
XA/B, ZF/G	All	Bench seat	10	XW 54 63166 A
XA/B, ZF/G	All	With bucket seats	2	XA 54 63166 A
– – 63167 – – SPRING – REAR SEAT CUSHION INTERMEDIATE				
XA/B	54, 65	Exc. police & taxi – to 1/75	10	XA 54 63167 A
XB	54	Exc. police & taxi – from 1/75	4	XB 54 63167 A*
XA/B, ZF/G	54	Police & taxi – to 1/75	8	XA 54 63167 C
XB	54	Police & taxi – 0.135" dia. – from 1/75	2	XB 54 63167 B*
XB	54	Police & taxi – 0.145" dia. – from 1/75	2	XB 54 63167 C*
XA/B	71		10	XA 71 63167 AA
– – 63186 – – SPRING – FRONT SEAT CUSHION HELPER				
XA/B	All		6	XA 54 63186 A
– – 63222 – – PAD – FRONT SEAT CUSHION				
XA, ZF	All		2	XA 54 63222 A
XB, ZG	54E,G,H, 65B,D,H		2	XA 54 63222 A
XA/B, ZF/G	54, 66, 71, 78	Bench seat – to 12/74	1	XW 54 632A22 A
XB, ZG	54, 66, 71, 78	Bench seat – from 12/74	1	XB 54 632A22 A*
XA/B	54D	Thailand only	2	XA 54 63222 B
XA/B, ZF/G	54A,B,C,E, 71A,B, 66A,B, 78A	Upper – to 12/74	1	XA 54 632A22 A
XB	54D, 71D		2	XB 54 63222 A
ZG	All	Upper – from 12/74	1	XB 54 632A22 B*
– – 632A22 – – PAD – FRONT SEAT CUSHION UPPER (REFER 63222)				
– – 63370 – – RETAINER – REAR SEAT CUSHION FRONT				
XA/B, ZF/G	54, 65, 71		2	XA 54 63370 A
– – 63804 – – REFER SOFT TRIM SECTION				
– – 63840 – – PAD – REAR SEAT CUSHION				
XA/B	65		1	XA 65 63840 C
XA/B	65	"C" clip – att. pad (63840) to frame	14	AR 358339 AS
– – 64416/7 – – REFER SOFT TRIM SECTION				
– – 644A18 – – REFER SOFT TRIM SECTION				
– – 644A25 – – REFER SOFT TRIM SECTION				
– – 644A29 – – WASHER – CLINCH BUTTON SEAT				
XA/B, ZF/G	54C,E,G		a/r	ARC6DB 54 644A29 A
– – 64700/1 – – SPRING & FRAME ASSY. – FRONT SEAT BACK				
XA/B	54A,B, 71A,B	Also 54A, B – police & taxi	1	XA 54 64700 A
XA/B	66, 78		1	XA 54 64700 CB
XA/B, ZF/G	54, 71	Bench seat with arm rest	1	XA 54 64700 B
XA/B, ZF/G	54C,D,E,G	Police & taxi – with arm rest	1	XA 54 64700 B
XA, ZF	All	R.H. – bucket seat – to 5/73	1	XA 65 64700 C
XA/B, ZF/G	All	R.H. – bucket seat – from 5/73	1	XA 65 64700 E
XA, ZF	All	L.H. – bucket seat – to 5/73	1	XA 65 64701 C
XA/B, ZF/G	All	L.H. – bucket seat – from 5/73	1	XA 65 64701 E
XA	65	L.H. – bucket seat – to 5/73	1	XA 65 64701 D
XA/B	65	L.H. – bucket seat – from 5/73	1	XA 65 64701 F
XA/B	54D	R.H. – Thailand only	1	XY 54 64700 A
XA/B	54D	L.H. – Thailand only	1	XY 54 64701 A
– – 64946 – – FILLER – AUX. SEAT BACK – REAR SIDE				
XB	71	Front	1	XB 71 64946 A
XB	71	Rear	1	XB 71 64946 B
– – 66600 – – REFER SOFT TRIM SECTION				

MODEL	BODY TYPE	REMARKS	UNIT	PART NUMBER
– – 66700 – – SPRING & FRAME ASSY. – REAR SEAT BACK				
XA/B	54A,B		1	XA 54 66700 A
XA/B	54C,D,H	To 1/75	1	XA 54 66700 B
XB	54C,D,H	From 1/75	1	XA 54 66700 C*
XA/B	54D	Export only	1	XA 54 66700 D
ZF/G	54E	To 1/75	1	ZF 54 66700 B
ZF/G	54G	To 1/75	1	ZF 54 66700 A
ZG	All	From 1/75	1	ZG 54 66700 A*
XA/B	65B		1	XA 65 66700 A
XA/B	65D,H		1	XA 65 66700 B
XA/B	71		1	XA 71 66700 A
– – 66816 – – PAD – REAR SEAT BACK COVER UPPER				
ZG	54G	From 9/74	2	ZG 54 66816 A*
– – 67086 – – REFER SOFT TRIM SECTION				
– – 67236/7 – – HINGE ASSY. – REAR SEAT CENTRE ARM REST				
XA/B	65D,H		1	XA 65 67236 A
ZF/G	54D,H,E,G,C, 71D		1	ZF 54 67236 A
XA/B, ZF/G	54D,H,E,G,C, 71D 65D,H	Screw – ¼" – 20 x 1.0" – att. hinge assy.	3	50053 S13
– – 672A44 – – REFER SOFT TRIM SECTION				
– – 67260 – – REFER SOFT TRIM SECTION				

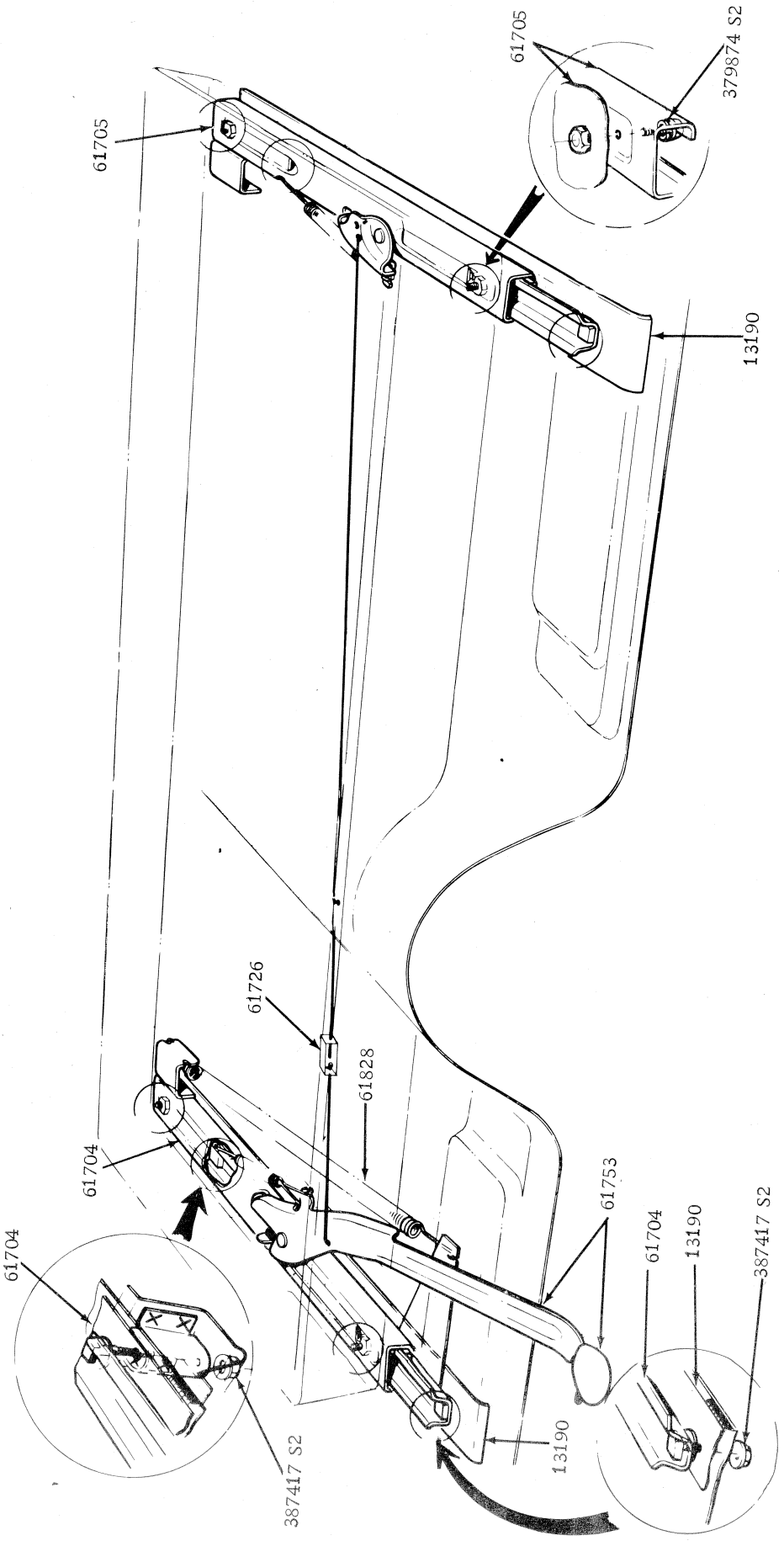

FRONT SEAT TRACK AND CONTROLS BENCH SEAT

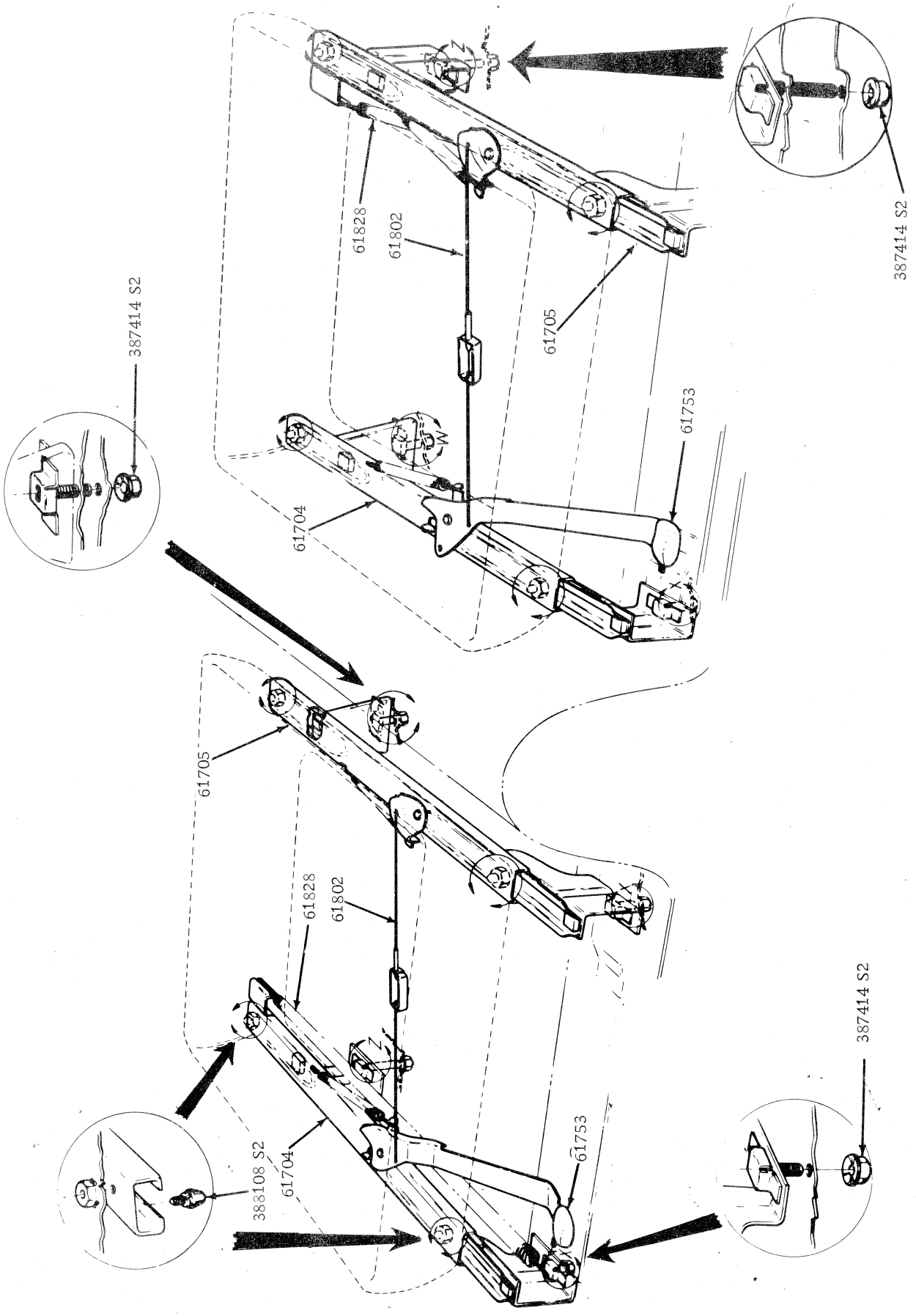

FRONT SEAT TRACK AND CONTROLS BUCKET SEATS

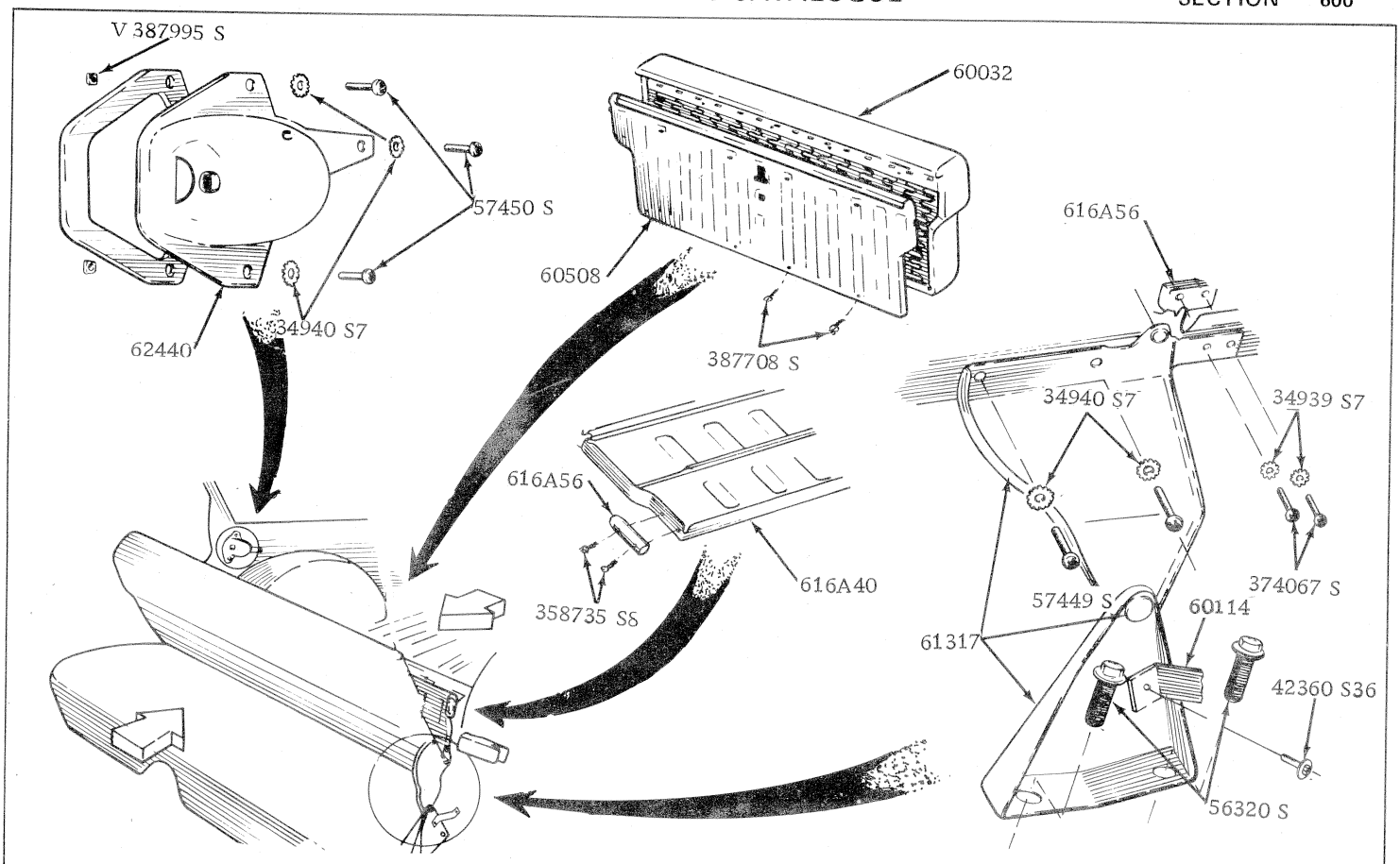

REAR SEAT FOLDING MECHANISM WAGON

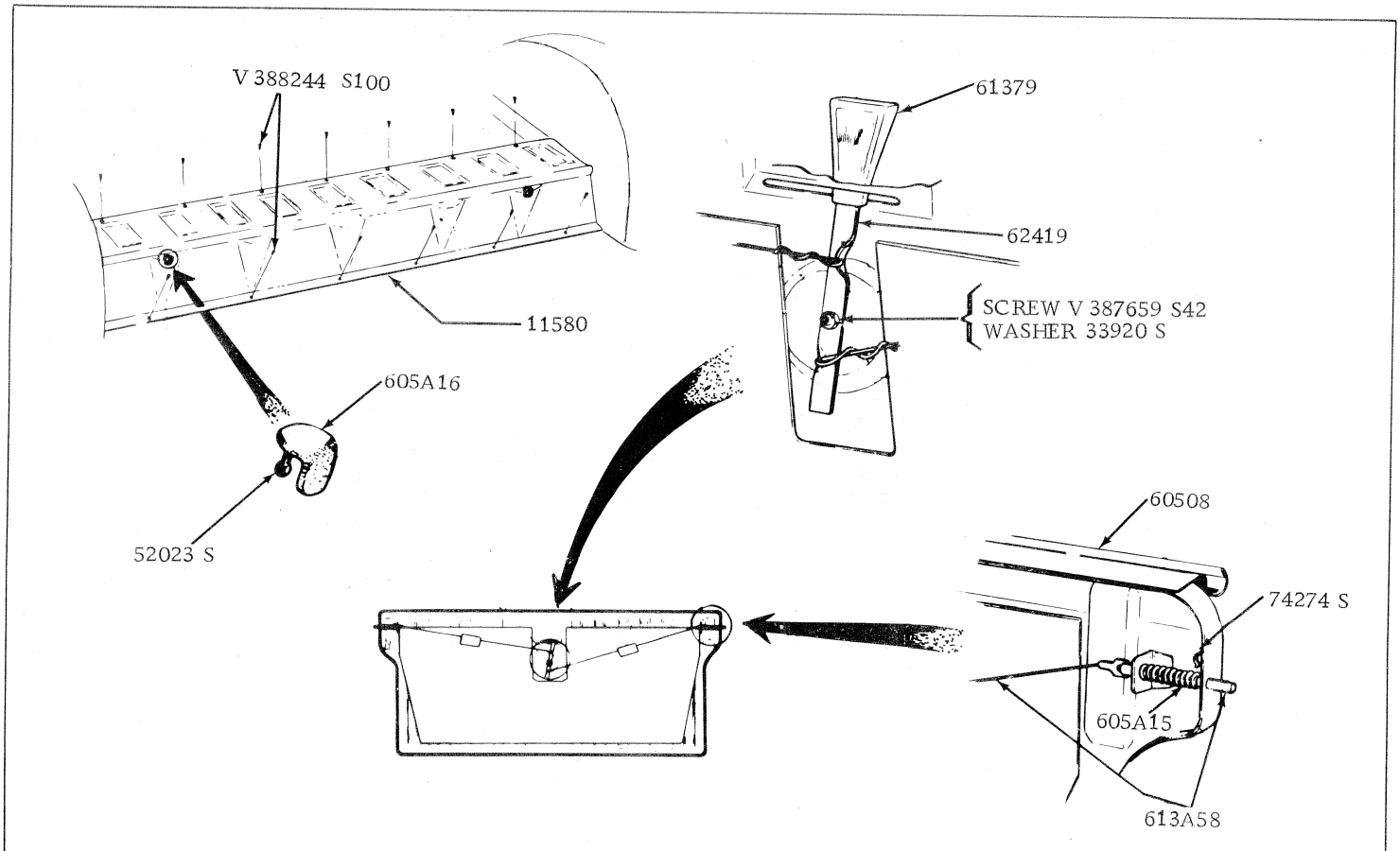

REAR SEAT FOLDING MECHANISM CONTROLS WAGON

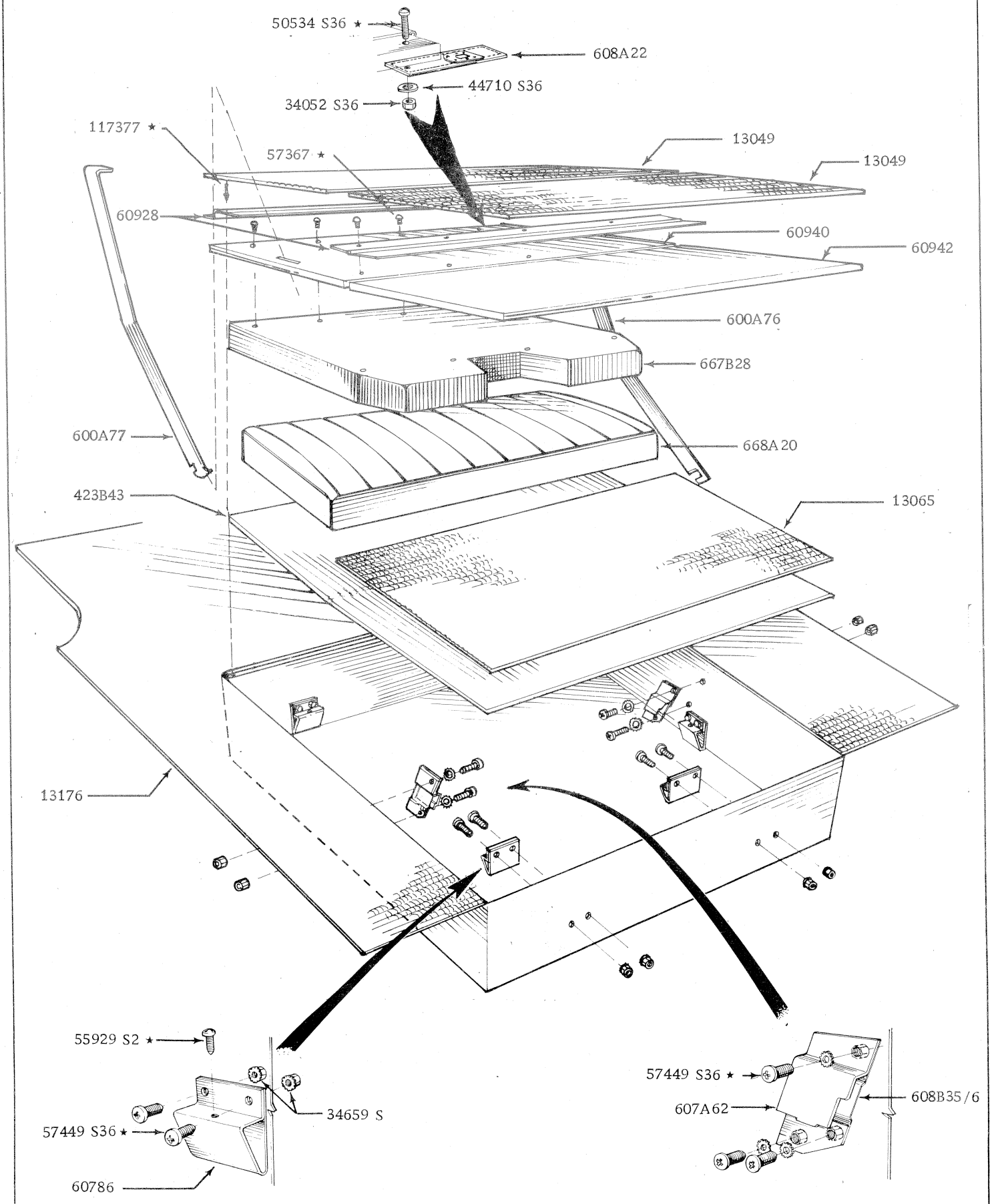

AUXILIARY REAR SEAT INSTALLATION – WAGON

INSTRUCTIONS FOR ORDERING SOFT TRIM

This section contains serviced parts for trim and other parts which are coloured. All parts are listed in basic part number sequence.

To order the correct parts the following steps are recommended.

1. Determine the correct model and trim code from the "Vehicle Identification Plate".

2. By reference to the "General Information" section in the front of the catalogue, establish the vehicle body type and trim colour.

3. Locate the basic part numbers required in the text of this section. Note that part numbers in this section are in numerical sequence. In the case of R.H. and L.H. matching parts, only the R.H. part number has been listed.

4. Match the body type and trim colour to the variation shown.

NOTE:

Some items are not colour keyed and must be identified by colour not by trim.

In some instances additional information may be required which can only be established by visual inspection. These variations are shown in the parts list proper.

COLOUR ABBREVIATIONS

Black	Blk.	Burgundy	Bur.
Blue	Blu.	Green	Grn.
Parchment	Par.	Dark Grey	D. Gry.
Saddle	Sad.	Nugget Stripe	Nug. Stp.
White	Wht.		

XA/ZF — Pages 2 to 26
XB/ZG — Pages 27 to 44

PART NUMBER				COLOUR	BODY TYPE																
					54							65			66		71			78	
					A	B	C	D	H	E	G	B	D	H	A	B	A	B	D	A	B

XA/ZF

-- 02344/5 -- PANEL -- COWL SIDE TRIM

NOTE: When ordering basic No. 02344 R.H.
02345 L.H.

XA	54	02344	AC1A	Black	1	1	1	1	1	1	1	1	1	1	1	1	1	1	1	1	–
			AC1B	Blue	1	1	1	1	1	1	1	1	1	1	1	1	1	1	1	1	–
			AC1F	Saddle	1	1	1	1	1	1	1	1	1	1	1	1	1	1	1	1	–
			AC1J	Burgundy	–	–	–	1	1	–	–	–	1	–	–	–	–	–	1	–	–

-- 02606 -- WINDLACE -- DOOR OPENING -- LONG

XA	65	02606	AA1A	Black	–	–	–	–	–	–	–	2	2	2	–	–	–	–	–	–	–
			AA1B	Blue	–	–	–	–	–	–	–	2	2	–	–	–	–	–	–	–	–
			AA1E	Parchment	–	–	–	–	–	–	–	2	2	2	–	–	–	–	–	–	–
			AA1F	Saddle	–	–	–	–	–	–	–	2	–	–	–	–	–	–	–	–	–
			AA1H	White	–	–	–	–	–	–	–	2	2	–	–	–	–	–	–	–	–
			AA1J	Burgundy	–	–	–	–	–	–	–	–	2	–	–	–	–	–	–	–	–
XA	66	02606	AA1A	Black	–	–	–	–	–	–	–	–	–	–	2	2	–	–	–	2	–
			AA1B	Blue	–	–	–	–	–	–	–	–	–	–	2	2	–	–	–	2	–
			AA1E	Parchment	–	–	–	–	–	–	–	–	–	–	–	2	–	–	–	–	–
			AA1F	Saddle	–	–	–	–	–	–	–	–	–	–	2	2	–	–	–	2	–

-- 02606 -- WINDLACE -- DOOR OPENING -- SHORT

XA	65	02606	BW1A	Black	–	–	–	–	–	–	–	2	2	2	–	–	–	–	–	–	–
			BW1B	Blue	–	–	–	–	–	–	–	2	2	–	–	–	–	–	–	–	–
			BW1E	Parchment	–	–	–	–	–	–	–	2	2	2	–	–	–	–	–	–	–
			BW1F	Saddle	–	–	–	–	–	–	–	2	2	2	–	–	–	–	–	–	–
			BW1H	White	–	–	–	–	–	–	–	–	2	2	–	–	–	–	–	–	–
			BW1J	Burgundy	–	–	–	–	–	–	–	–	2	–	–	–	–	–	–	–	–

-- 03542 -- MOULDING -- WINDSHIELD HEADER INSIDE

XA	54	03542	C2A	Black	1	1	1	1	1	1	1	–	–	–	1	1	1	1	1	1	–
			C3B	Blue	1	1	1	1	–	1	1	–	–	–	1	1	1	1	1	1	–
			C1E	Parchment	–	–	–	1	1	–	1	–	–	–	–	–	–	1	–	–	–
			C3F	Saddle	1	1	1	1	1	1	1	–	–	–	1	1	1	1	1	1	–
			C1H	White	–	1	1	1	1	1	1	–	–	–	–	1	–	1	1	–	–
XY	54	03542	C1J	Burgundy	–	–	–	1	–	–	–	–	–	–	–	–	–	–	1	–	–
XA	65	03542	AA1A	Black	–	–	–	–	–	–	–	1	1	1	–	–	–	–	–	–	–
			AA1B	Blue	–	–	–	–	–	–	–	1	1	–	–	–	–	–	–	–	–
			AA1E	Parchment	–	–	–	–	–	–	–	–	1	1	–	–	–	–	–	–	–
			AA1F	Saddle	–	–	–	–	–	–	–	1	1	1	–	–	–	–	–	–	–
			AA1H	White	–	–	–	–	–	–	–	1	1	1	–	–	–	–	–	–	–
			AA1J	Burgundy	–	–	–	–	–	–	–	–	1	–	–	–	–	–	–	–	–

-- 04104 -- VISOR -- INSIDE LESS ARM & BRACKET

XA	54	04104	AD1A	Black	–	–	–	2	2	–	2	–	2	2	–	–	–	–	2	–	–
			AD1B	Blue	–	–	–	2	–	–	2	–	2	–	–	–	–	–	2	–	–
			AD1E	Parchment	–	–	–	2	2	–	2	–	2	2	–	–	–	–	2	–	–
			AD1F	Saddle	–	–	–	2	2	–	2	–	2	2	–	–	–	–	2	–	–
			AD1J	Burgundy	–	–	–	2	–	–	2	–	2	–	–	–	–	–	2	–	–
			AD1P	Light Grey	2	2	2	2	2	2	2	2	2	2	2	2	2	2	2	2	–
XA	54	04104	AD3E	Parchment	–	2	2	2	–	2	2	–	–	–	–	–	–	–	–	–	–

(Taxi only)

PART NUMBER				COLOUR	BODY TYPE																
					54							65			66		71			78	
					A	B	C	D	H	E	G	B	D	H	A	B	A	B	D	A	B
– – 04282 – – PAD AND RETAINER ASSY. – INSTRUMENT PANEL																					
XA	54	04282	AD1A	Black	1	1	1	1	1	1	1	1	1	1	1	1	1	1	1	1	–
			AD1B	Blue	1	1	1	1	–	1	1	1	1	–	1	1	1	1	1	1	–
			AD1F	Saddle	1	1	1	1	–	1	1	1	1	–	1	1	1	1	1	1	–
			AD1J	Burgundy	–	–	–	1	–	–	1	–	1	–	–	–	–	–	1	–	–
358735 S2				Screw	3	3	3	3	3	–	–	3	3	3	3	3	3	3	3	3	–
55928 S36				Screw	–	–	–	–	–	4	4	–	–	–	–	–	–	–	–	–	–
– – 042B85 – – PAD – TRANSCEIVE – TAXI																					
XA	54	042B85	AA1A	Black	1	1	1	1	–	1	1	–	–	–	1	1	–	–	1	–	–
			AA1B	Blue	1	1	1	1	–	1	1	–	–	–	1	1	–	–	1	–	–
			AA1F	Saddle–O.N.R.	1	1	1	1	–	1	1	–	–	–	1	1	–	–	1	–	–
			AA1J	Burgundy	–	–	–	1	–	–	1	–	–	–	–	–	–	–	–	–	–
– – 04291 – – TRIM COVER – INSTRUMENT PANEL L.H.																					
XA	54	04291	AB1A	Black	–	–	–	1	1	–	1	–	1	1	–	–	–	–	1	–	–
(Valino)			AB1B	Blue	–	–	–	1	–	–	1	–	1	–	–	–	–	–	1	–	–
(Saville)			AB2F	Saddle	–	–	–	1	–	–	1	–	1	–	–	–	–	–	1	–	–
(Valino)			AB1J	Burgundy	–	–	–	1	–	–	1	–	1	–	–	–	–	–	1	–	–
– – 04480 – – PANEL ASSY. – INSTRUMENT PANEL END																					
XA	54	04480	AA1A	Black	1	1	1	1	1	1	1	1	1	1	1	1	1	1	1	1	–
			AA1B	Blue	1	1	1	1	–	1	1	1	1	–	1	1	1	1	1	1	–
			AA1F	Saddle	1	1	1	1	–	1	1	1	1	–	1	1	1	1	1	1	–
			AA1J	Burgundy	–	–	–	1	–	–	1	–	1	–	–	–	–	–	1	–	–
– – 044B86 – – TRIM COVER – INSTRUMENT PANEL CENTRE –WITHOUT AIR CONDITIONER																					
XA	54	044B86	AB1A	Black	–	–	–	1	1	–	1	–	1	1	–	–	–	–	1	–	–
(Valino)			AB1B	Blue	–	–	–	1	–	–	1	–	1	–	–	–	–	–	1	–	–
(Saville)			AB2F	Saddle	–	–	–	1	–	–	1	–	1	–	–	–	–	–	1	–	–
(Valino)			AB1J	Burgundy	–	–	–	1	–	–	1	–	1	–	–	–	–	–	1	–	–
– – 044B86 – – TRIM COVER – INSTRUMENT PANEL CENTRE – WITH AIR CONDITIONER																					
XA	54	044B86	BB1A	Black	–	–	–	1	1	–	1	–	1	1	–	–	–	–	1	–	–
(Valino)			BB1B	Blue	–	–	–	1	–	–	1	–	1	–	–	–	–	–	1	–	–
(Saville)			BB2F	Saddle	–	–	–	1	–	–	1	–	1	–	–	–	–	–	1	–	–
(Valino)			BB1J	Burgundy	–	–	–	1	–	–	1	–	1	–	–	–	–	–	1	–	–
– – 045A05 – – CONSOLE ASSY. & ARM REST – WITH COLUMN SHIFT ONLY																					
XA	54	045A05	AD2A	Black to 10/72	–	–	–	1	–	–	1	–	1	–	–	–	–	–	1	–	–
			AD2B	Blue to 10/72	–	–	–	1	–	–	1	–	1	–	–	–	–	–	1	–	–
			AD1E	Parchment to 10/72	–	–	–	1	–	–	1	–	1	–	–	–	–	–	1	–	–
			AD2F	Saddle to 10/72	–	–	–	1	–	–	1	–	1	–	–	–	–	–	1	–	–
			AD2H	White to 10/72	–	–	–	1	–	–	1	–	1	–	–	–	–	–	1	–	–
			AD1J	Burgundy to 10/72	–	–	–	1	–	–	1	–	1	–	–	–	–	–	1	–	–
XA	54	045A05	AE2A	Black from 10/72 to 5/73	–	–	–	1	–	–	1	–	1	–	–	–	–	–	1	–	–
			AE2B	Blue from 10/72 to 5/73	–	–	–	1	–	–	1	–	1	–	–	–	–	–	1	–	–
			AE1E	Parchment from 10/72 to 5/73	–	–	–	1	–	–	1	–	1	–	–	–	–	–	1	–	–
			AE2F	Saddle from 10/72 to 5/73	–	–	–	1	–	–	1	–	1	–	–	–	–	–	1	–	–

PART NUMBER				COLOUR	BODY TYPE																	
					54							65			66		71			78	
					A	B	C	D	H	E	G	B	D	H	A	B	A	B	D	A	B
— — 045A05 — — CONSOLE ASSY. & ARM REST — WITH COLUMN SHIFT ONLY (Continued)																						
			AE2H	White from 10/72 to 5/73	—	—	—	1	—	—	1	—	1	—	—	—	—	—	1	—	—
			AE1J	Burgundy from 10/72 to 5/73	—	—	—	1	—	—	1	—	1	—	—	—	—	—	1	—	—
XA	54	045A05	AF2A	Black—from 5/73	—	—	—	1	—	—	1	—	1	—	—	—	—	—	1	—	—
			AF2B	Blue—from 5/73	—	—	—	1	—	—	1	—	1	—	—	—	—	—	1	—	—
			AF1E	Parchment — from 5/73—O.R.C.	—	—	—	1	—	—	1	—	1	—	—	—	—	—	1	—	—
			AF2F	Saddle — from 5/73	—	—	—	1	—	—	1	—	1	—	—	—	—	—	1	—	—
			AF2H	White—from 5/73	—	—	—	1	—	—	1	—	1	—	—	—	—	—	1	—	—
			AF1J	Burgundy—from 5/73	—	—	—	1	—	—	1	—	1	—	—	—	—	—	1	—	—
XA	54	045A05	AD1A	Black to 10/72	1	1	1	—	—	1	—	—	—	—	1	1	1	1	—	1	—
			AD1B	Blue to 10/72	1	1	1	—	—	1	—	—	—	—	1	1	1	1	—	1	—
			AD2E	Parchment to 10/72	—	1	1	—	—	1	—	—	—	—	—	1	—	1	—	—	—
			AD1F	Saddle to 10/72	1	1	1	—	—	1	—	—	—	—	1	1	1	1	—	1	—
			AD1H	White to 10/72	—	1	1	—	—	1	—	—	—	—	—	1	—	1	—	—	—
XA	54	045A05	AE1A	Black from 10/72 to 5/73	1	1	1	—	—	1	—	—	—	—	1	1	1	1	—	1	—
			AE1B	Blue from 10/72 to 5/73	1	1	1	—	—	1	—	—	—	—	1	1	1	1	—	1	—
			AE2E	Parchment from 10/72 to 5/73	—	1	1	—	—	1	—	—	—	—	—	—	—	1	—	—	—
			AE1F	Saddle from 10/72 to 5/73	1	1	1	—	—	1	—	—	—	—	1	1	1	1	—	1	—
			AE1H	White from 10/72 to 5/73	—	1	1	—	—	1	—	—	—	—	1	1	—	1	—	1	—
XA	54	045A05	AF1A	Black from 5/73	1	1	1	—	—	1	—	—	—	—	1	1	1	1	—	1	—
			AF1B	Blue from 5/73	1	1	1	—	—	1	—	—	—	—	1	1	1	1	—	1	—
			AF2E	Parchment from 5/73	—	1	1	—	—	1	—	—	—	—	1	1	—	1	—	1	—
			AF1F	Saddle from 5/73	1	1	1	—	—	1	—	—	—	—	1	1	1	1	—	1	—
			AF1H	White from 5/73	—	1	1	—	—	1	—	—	—	—	1	1	—	1	—	1	—
— — 045A06 — — CONSOLE ASSY. — WITH COLUMN SHIFT ONLY																						
XA	54	045A06	AD1A	Black to 10/72	1	1	1	—	—	1	—	—	—	—	1	1	1	1	—	1	—
			AD1B	Blue to 10/72	1	1	1	—	—	1	—	—	—	—	1	1	1	1	—	1	—
			AD2E	Parchment to 10/72	—	1	1	—	—	1	—	—	—	—	—	1	—	1	—	—	—
			AD1F	Saddle to 10/72	1	1	1	—	—	1	—	—	—	—	1	1	1	1	—	1	—
			AD1H	White to 10/72	—	1	1	—	—	—	—	—	—	—	—	1	—	1	—	—	—
XA	54	045A06	AE1A	Black from 10/72 to 5/73	1	1	1	—	—	1	—	—	—	—	1	1	1	1	—	1	—
			AE1B	Blue from 10/72 to 5/73	1	1	1	—	—	1	—	—	—	—	1	1	1	1	—	1	—
			AE2A	Parchment from 10/72 to 5/73	—	1	1	—	—	1	—	—	—	—	—	1	—	1	—	—	—
			AE1F	Saddle from 10/72 to 5/73	1	1	1	—	—	1	—	—	—	—	1	1	1	1	—	1	—
			AE1H	White from 10/72 to 5/73	—	1	1	—	—	1	—	—	—	—	—	1	—	1	—	1	—

PART NUMBER				COLOUR	BODY TYPE																
					54							65			66		71			78	
					A	B	C	D	H	E	G	B	D	H	A	B	A	B	D	A	B
– – 045A06 – – CONSOLE ASSY. – WITH COLUMN SHIFT ONLY (Continued)																					
XA	54	045A06	AD2A	Black to 10/72	–	–	–	1	–	–	1	–	1	–	–	–	–	–	1	–	–
			AD2B	Blue to 10/72	–	–	–	1	–	–	1	–	1	–	–	–	–	–	1	–	–
			AD1E	Parchment to 10/72	–	–	–	1	–	–	1	–	1	–	–	–	–	–	1	–	–
			AD2F	Saddle to 10/72	–	–	–	1	–	–	1	–	1	–	–	–	–	–	1	–	–
			AD2H	White to 10/72	–	–	–	1	–	–	1	–	1	–	–	–	–	–	1	–	–
			AD1J	Burgundy to 10/72	–	–	–	1	–	–	1	–	1	–	–	–	–	–	1	–	–
XA	54	045A06	AE2A	Black from 10/72 to 5/73	–	–	–	1	–	–	1	–	1	–	–	–	–	–	1	–	–
			AE2B	Blue from 10/72 to 5/73	–	–	–	1	–	–	1	–	1	–	–	–	–	–	1	–	–
			AE1E	Parchment from 10/72 to 5/73	–	–	–	1	–	–	1	–	1	–	–	–	–	–	1	–	–
			AE2F	Saddle from 10/72 to 5/73	–	–	–	1	–	–	1	–	1	–	–	–	–	–	1	–	–
			AE2H	White from 10/72 to 5/73	–	–	–	1	–	–	1	–	1	–	–	–	–	–	1	–	–
			AE1J	Burgundy from 10/72 to 5/73	–	–	–	1	–	–	1	–	1	–	–	–	–	–	1	–	–
– – 045A06 – – CONSOLE ASSY. – WITH FLOOR SHIFT (FOR HANDLING OPTION DRILL (2) HOLES FOR BADGE)																					
XA	54	045A06	CB1A	Black	1	1	1	1	1	1	1	1	1	1	1	1	1	1	1	1	–
(Man. trans.)			CB1B	Blue	1	1	1	1	–	1	1	1	1	–	1	1	1	1	1	1	–
			CB1F	Saddle	1	1	1	1	1	1	1	1	1	1	1	1	1	1	1	1	–
			CB1J	Burgundy	–	–	–	1	–	–	1	–	1	–	–	–	–	–	1	–	–
XA	54	045A06	BC1A	Black	1	1	1	1	1	1	1	–	1	1	1	1	1	1	1	1	–
(Auto. trans.)			BC1B	Blue	1	1	1	1	–	1	1	–	1	–	1	1	1	1	1	1	–
			BC1F	Saddle	1	1	1	1	1	1	1	–	1	1	1	1	1	1	1	1	–
			BC1J	Burgundy	–	–	–	1	–	–	1	–	1	–	–	–	–	–	1	–	–
– – 045A10 – – ARM REST ASSY. – CONSOLE – WITH COLUMN SHIFT ONLY																					
XA	54	045A10	AC1A	Black to 5/73	1	1	1	–	–	1	–	–	–	–	1	1	1	1	–	1	–
(Kiwi)			AC1B	Blue to 5/73	1	1	1	–	–	1	–	–	–	–	1	1	1	1	–	1	–
			AC2E	Parchment to 5/73	–	1	1	–	–	1	–	–	–	–	–	1	–	1	–	–	–
			AC1F	Saddle to 5/73	1	1	1	–	–	1	–	–	–	–	1	1	1	1	–	1	–
			AC1H	White to 5/73	–	1	1	–	–	1	–	–	–	–	–	1	–	1	–	–	–
XA	54	045A10	AE1A	Black from 5/73	1	1	1	–	–	1	–	–	–	–	1	1	1	1	–	1	–
(Kiwi)			AE1B	Blue from 5/73	1	1	1	–	–	1	–	–	–	–	1	1	1	1	–	1	–
			AE2E	Parchment from 5/73	–	1	1	–	–	1	–	–	–	–	–	1	–	1	–	–	–
			AE1F	Saddle from 5/73	1	1	1	–	–	1	–	–	–	–	1	1	1	1	–	1	–
			AE1H	White from 5/73	–	1	1	–	–	1	–	–	–	–	–	1	–	1	–	–	–
XA	54	045A10	AC2A	Black to 5/73	–	–	–	1	–	–	1	–	1	–	–	–	–	–	1	–	–
(Valino)			AC2B	Blue to 5/73	–	–	–	1	–	–	1	–	1	–	–	–	–	–	1	–	–
			AC1E	Parchment to 5/73	–	–	–	1	–	–	1	–	1	–	–	–	–	–	1	–	–
			AC2F	Saddle to 5/73	–	–	–	1	–	–	1	–	1	–	–	–	–	–	1	–	–

PART NUMBER				COLOUR	BODY TYPE																	
					54							65			66		71			78	
					A	B	C	D	H	E	G	B	D	H	A	B	A	B	D	A	B
– – 045A10 – – ARM REST ASSY. – CONSOLE – WITH COLUMN SHIFT ONLY (Continued)																					
			AC2H	White to 5/73	–	–	–	1	–	–	1	–	1	–	–	–	–	–	1	–	–
			AC1J	Burgundy to 5/73	–	–	–	1	–	–	1	–	1	–	–	–	–	–	1	–	–
XA	54	045A10	AE2A	Black from 5/73	–	–	–	1	–	–	1	–	1	–	–	–	–	–	1	–	–
(Valino)			AE2B	Blue from 5/73	–	–	–	1	–	–	1	–	1	–	–	–	–	–	1	–	–
			AE1E	Parchment from 5/73	–	–	–	1	–	–	1	–	1	–	–	–	–	–	1	–	–
			AE2F	Saddle from 5/73	–	–	–	1	–	–	1	–	1	–	–	–	–	–	1	–	–
			AE2H	White from 5/73	–	–	–	1	–	–	1	–	1	–	–	–	–	–	1	–	–
			AE1J	Burgundy from 5/73	–	–	–	1	–	–	1	–	1	–	–	–	–	–	1	–	–
– – 045A16/7 – – COVER – ARM REST HINGE CONSOLE – WITH COLUMN SHIFT ONLY																					
NOTE: When ordering basic No. 045A16 R.H. 045A17 L.H.																					
XA	54	045A16	AC1A	Black	1	1	1	–	–	1	–	–	–	–	1	1	1	1	–	1	–
			AC1B	Blue	1	1	1	–	–	1	–	–	–	–	1	1	1	1	–	1	–
			AC2E	Parchment	–	1	1	–	–	1	–	–	–	–	–	1	–	1	–	–	–
			AC1F	Saddle	1	1	1	–	–	1	–	–	–	–	1	1	1	1	–	1	–
			AC1H	White	–	1	1	–	–	1	–	–	–	–	–	1	–	1	–	–	–
XA	54	045A16	AC2A	Black	–	–	–	1	–	–	1	–	1	–	–	–	–	–	1	–	–
			AC2B	Blue	–	–	–	1	–	–	1	–	1	–	–	–	–	–	1	–	–
			AC1E	Parchment	–	–	–	1	–	–	1	–	1	–	–	–	–	–	1	–	–
			AC2F	Saddle	–	–	–	1	–	–	1	–	1	–	–	–	–	–	1	–	–
			AC2H	White	–	–	–	1	–	–	1	–	1	–	–	–	–	–	1	–	–
			AC1J	Burgundy	–	–	–	1	–	–	1	–	1	–	–	–	–	–	1	–	–
– – 045A22 – – COVER ASSY. – ARM REST CONSOLE – WITH COLUMN SHIFT ONLY																					
XA	54	045A22	AB1A	Black	1	1	1	–	–	1	–	–	–	–	1	1	1	1	–	1	–
			AB1B	Blue	1	1	1	–	–	1	–	–	–	–	1	1	1	1	–	1	–
			AB2E	Parchment	–	1	1	–	–	1	–	–	–	–	–	1	–	1	–	–	–
			AB1F	Saddle	1	1	1	–	–	1	–	–	–	–	1	1	1	1	–	1	–
			AB1H	White	–	1	1	–	–	1	–	–	–	–	–	1	–	1	–	–	–
XA	54	045A22	AB2A	Black	–	–	–	1	–	–	1	–	1	–	–	–	–	–	1	–	–
			AB2B	Blue	–	–	–	1	–	–	1	–	1	–	–	–	–	–	1	–	–
			AB1E	Parchment	–	–	–	1	–	–	1	–	1	–	–	–	–	–	1	–	–
			AB2F	Saddle	–	–	–	1	–	–	1	–	1	–	–	–	–	–	1	–	–
			AB2H	White	–	–	–	1	–	–	1	–	1	–	–	–	–	–	1	–	–
			AB1J	Burgundy	–	–	–	1	–	–	1	–	1	–	–	–	–	–	1	–	–
– – 045A23 – – COVER ASSY. – CONSOLE																					
XA	54	045A23	AB1A	Black	1	1	1	–	–	1	–	–	–	–	1	1	1	1	–	1	–
			AB1B	Blue	1	1	1	–	–	1	–	–	–	–	1	1	1	1	–	1	–
			AB2E	Parchment	–	1	1	–	–	1	–	–	–	–	–	1	–	1	–	–	–
			AB1F	Saddle	1	1	1	–	–	1	–	–	–	–	1	1	1	1	–	1	–
			AB1H	White	–	1	1	–	–	1	–	–	–	–	–	1	–	1	–	–	–
XA	54	045A23	AB2A	Black	–	–	–	1	–	–	1	–	1	–	–	–	–	–	1	–	–
			AB2B	Blue	–	–	–	1	–	–	1	–	1	–	–	–	–	–	1	–	–
			AB1E	Parchment	–	–	–	1	–	–	1	–	1	–	–	–	–	–	1	–	–
			AB2F	Saddle	–	–	–	1	–	–	1	–	1	–	–	–	–	–	1	–	–
			AB2H	White	–	–	–	1	–	–	1	–	1	–	–	–	–	–	1	–	–
			AB1J	Burgundy	–	–	–	1	–	–	1	–	1	–	–	–	–	–	1	–	–

PART NUMBER				COLOUR	BODY TYPE																	
					54							65			66		71			78	
					A	B	C	D	H	E	G	B	D	H	A	B	A	B	D	A	B
-- 045A26 -- SPACER -- CONSOLE ARM REST -- (PAINT TO SUIT)																					
XA	54	045A26	AB2F	Saddle	2	2	2	2	–	2	2	–	2	–	2	2	2	2	2	2	–
-- 048A42 -- RECEPTACLE -- ASH CONSOLE PANEL REAR -- FLOOR SHIFT ONLY																					
XA	54	048A42	AA1A	Black -- O.R.C.	1	1	1	1	1	1	1	1	1	–	–	–	1	1	1	–	–
			AA1B	Blue	1	1	1	1	–	1	1	1	1	–	–	–	1	1	1	–	–
			AA1E	Parchment	–	1	1	1	–	1	1	1	1	–	–	–	–	1	1	–	–
			AA2F	Saddle	1	1	1	1	1	1	1	1	1	–	–	–	1	1	1	–	–
			AA1H	White	–	1	1	1	–	1	1	1	1	–	–	–	–	1	1	–	–
			AA1J	Burgundy	–	–	–	1	–	–	1	–	1	–	–	–	–	–	1	–	–
-- 060A70 -- DOOR ASSY. -- CONSOLE GLOVE BOX COMPARTMENT -- FLOOR SHIFT ONLY -- (BUCKET SEATS WITH SPORTS CONSOLE)																					
XA	54	060A70	BC1A	Black	1	1	1	1	1	1	1	1	1	1	1	1	1	1	1	1	–
			BC1B	Blue	1	1	1	1	1	1	1	1	1	1	1	1	1	1	1	1	–
			BC1F	Saddle	1	1	1	1	1	1	1	1	1	1	1	1	1	1	1	1	–
			BC1J	Burgundy	1	1	1	1	1	1	1	1	1	1	1	1	1	1	1	1	–
-- 06126 -- TRIM COVER -- GLOVE COMPARTMENT DOOR																					
XA	54	06126	AB1A	Black	–	–	–	1	1	–	1	–	1	1	–	–	–	–	1	–	–
(Valino)			AB1B	Blue	–	–	–	1	–	–	–	–	1	–	–	–	–	–	1	–	–
(Saville)			AB2F	Saddle	–	–	–	1	–	–	1	–	1	–	–	–	–	–	1	–	–
(Valino)			AB1J	Burgundy	–	–	–	1	–	–	1	–	1	–	–	–	–	–	1	–	–
-- 13000 -- CARPET ASSY. -- FRONT FLOOR -- COLUMN SHIFT ONLY																					
XA	54	13000	AA1A	Black	1	1	1	1	–	1	1	1	1	–	1	1	1	1	1	1	–
			AA1B	Blue	1	1	1	1	–	1	1	1	1	–	1	1	1	1	1	1	–
			AA1F	Saddle	1	1	1	1	–	1	1	1	1	–	1	1	1	1	1	1	–
			AA1J	Burgundy	1	1	1	1	–	1	1	1	1	–	1	1	1	1	1	1	–
-- 13000 -- CARPET ASSY. -- FRONT FLOOR -- FLOORSHIFT ONLY																					
XA	54	13000	BA1A	Black	1	1	1	1	1	1	1	1	1	1	1	1	1	1	1	1	–
			BA1B	Blue	1	1	1	1	1	1	1	1	1	1	1	1	1	1	1	1	–
			BA1F	Saddle	1	1	1	1	1	1	1	1	1	1	1	1	1	1	1	1	–
			BA1J	Burgundy	1	1	1	1	1	1	1	1	1	1	1	1	1	1	1	1	–
-- 13000 -- CARPET ASSY. -- FRONT FLOOR -- WHEN HEATER OR VENTILATION UNIT NOT FITTED																					
XAE	54	13000	AA1A	Black -- export	–	–	1	1	1	–	–	–	–	–	–	–	–	–	–	–	–
			AA1B	Blue -- export	–	–	1	1	–	–	–	–	–	–	–	–	–	–	–	–	–
			AA1F	Saddle -- export	–	–	1	1	1	–	–	–	–	–	–	–	–	–	–	–	–
			AA1J	Burgundy -- export	–	–	1	1	–	–	–	–	–	–	–	–	–	–	–	–	–
-- 13010 -- MAT -- FRONT FLOOR -- COLUMN SHIFT ONLY																					
XA	54	13010	AA1A	Black	1	1	–	–	–	–	–	1	–	–	1	1	–	1	–	1	–
			AA1A	OSO G2014	1	1	1	1	1	1	1	–	–	–	–	–	–	–	–	–	–
			AA1B	Blue	1	1	–	–	–	–	–	1	–	–	1	1	–	1	–	1	–
			AA1B	OSO G2014	1	1	1	1	1	1	1	–	–	–	–	–	–	–	–	–	–
			AA1F	Saddle	1	1	–	–	–	–	–	1	–	–	1	1	1	1	–	1	–
			AA1F	OSO G2014	1	1	1	1	1	1	1	–	–	–	–	–	–	–	–	–	–
(Police & Taxi)			AATA	Black	1	1	1	–	–	1	1	–	–	–	1	1	–	–	–	1	–

PART NUMBER				COLOUR	BODY TYPE																
					54							65			66		71			78	
					A	B	C	D	H	E	G	B	D	H	A	B	A	B	D	A	B
-- 13054 -- MAT - REAR FLOOR																					
XA	65	13054	AA1A	Black	–	–	–	–	–	–	–	1	–	–	–	–	–	–	–	–	–
			AA1B	Blue	–	–	–	–	–	–	–	1	–	–	–	–	–	–	–	–	–
			AA1F	Saddle	–	–	–	–	–	–	–	1	–	–	–	–	–	–	–	–	–
-- 13054 -- MAT - REAR FLOOR - COLUMN SHIFT ONLY																					
XA	54	13054	AA1A	Black	1	1	–	–	–	–	–	–	–	–	–	–	1	1	–	–	–
			AA1A	OSO G2014	1	1	1	1	1	1	1	–	–	–	–	–	1	1	1	–	–
			AA1B	Blue	1	1	–	–	–	–	–	–	–	–	–	–	1	1	–	–	–
			AA1B	OSO G2014	1	1	1	1	1	1	1	–	–	–	–	–	1	1	1	–	–
			AA1F	Saddle	1	1	–	–	–	–	–	–	–	–	–	–	1	1	–	–	–
			AA1F	OSO G2014	1	1	1	1	1	1	1	–	–	–	–	–	1	1	1	–	–
(Police & Taxi)			AATA	Black	1	1	1	–	–	1	1	–	–	–	–	–	–	–	–	–	–
-- 13054/5 -- MAT - REAR FLOOR																					
NOTE: When ordering basic No. 13054 R.H.																					
13055 L.H.																					
XA	66	13054	AA1A	Black	–	–	–	–	–	–	–	–	–	–	1	1	–	–	–	1	–
			AA1B	Blue	–	–	–	–	–	–	–	–	–	–	1	1	–	–	–	1	–
			AA1F	Saddle	–	–	–	–	–	–	–	–	–	–	1	1	–	–	–	1	–
-- 13054 -- CARPET ASSY. - REAR FLOOR																					
XA	54	13054	BA1A	Black	1	1	1	1	1	1	1	–	–	–	–	–	1	1	1	–	–
			BA1B	Blue	1	1	1	1	1	1	1	–	–	–	–	–	1	1	1	–	–
			BA1F	Saddle	1	1	1	1	1	1	1	–	–	–	–	–	1	1	1	–	–
			BA1J	Burgundy	1	1	1	1	1	1	1	–	–	–	–	–	1	1	1	–	–
XA	65	13054	BA1A	Black	–	–	–	–	–	–	–	–	1	1	–	–	–	–	–	–	–
			BA1B	Blue	–	–	–	–	–	–	–	–	1	–	–	–	–	–	–	–	–
			BA1F	Saddle	–	–	–	–	–	–	–	1	1	–	–	–	–	–	–	–	–
			BA1J	Burgundy	–	–	–	–	–	–	–	–	1	–	–	–	–	–	–	–	–
XA	66	13054	BA1A	Black	–	–	–	–	–	–	–	–	–	–	1	1	–	–	–	1	–
			BA1B	Blue	–	–	–	–	–	–	–	–	–	–	1	1	–	–	–	1	–
			BA1F	Saddle	–	–	–	–	–	–	–	–	–	–	1	1	–	–	–	1	–
			BA1J	Burgundy	–	–	–	–	–	–	–	–	–	–	1	1	–	–	–	1	–
-- 13144/5 -- MOULDING - CENTRE BODY PILLAR LOWER																					
NOTE: When ordering basic No. 13144 R.H.																					
13145 L.H.																					
XA	54	13144	AA1A	Black	1	1	1	1	1	1	1	–	–	–	–	–	1	1	1	–	–
			AA1B	Blue	1	1	1	1	–	1	1	–	–	–	–	–	1	1	1	–	–
			AA1F	Saddle	1	1	1	1	1	1	1	–	–	–	–	–	1	1	1	–	–
			AA1J	Burgundy	–	–	1	1	–	1	1	–	–	–	–	–	–	–	1	–	–
-- 13182 -- MAT - REAR FLOOR REAR																					
XA	71	13182	AA1A	Black	–	–	–	–	–	–	–	–	–	–	–	–	1	1	–	–	–
			AA1A	OSO G2014	–	–	–	–	–	–	–	–	–	–	–	–	–	–	1	–	–
			AA1B	Blue	–	–	–	–	–	–	–	–	–	–	–	–	1	1	–	–	–
			AA1B	OSO G2014	–	–	–	–	–	–	–	–	–	–	–	–	–	–	1	–	–
			AA1F	Saddle	–	–	–	–	–	–	–	–	–	–	–	–	1	1	–	–	–
			AA1F	OSO G2014	–	–	–	–	–	–	–	–	–	–	–	–	–	–	1	–	–

PART NUMBER				COLOUR	BODY TYPE																
					54							65			66		71			78	
					A	B	C	D	H	E	G	B	D	H	A	B	A	B	D	A	B
– – 13182 – – CARPET – REAR FLOOR REAR																					
XA	71	13182	BA1A	Black	–	–	–	–	–	–	–	–	–	–	–	–	–	–	1	–	–
			BA1B	Blue	–	–	–	–	–	–	–	–	–	–	–	–	–	–	1	–	–
			BA1F	Saddle	–	–	–	–	–	–	–	–	–	–	–	–	–	–	1	–	–
			BA1J	Burgundy	–	–	–	–	–	–	–	–	–	–	–	–	–	–	1	–	–
– – 23916/7 – – TRIM COVER – FRONT DOOR UPPER																					
NOTE: When ordering basic No. 23916 R.H.																					
				23917 L.H.																	
XA	54	23916	AA1A	Black	–	–	1	–	–	1	–	–	–	–	–	–	–	–	–	–	–
			AA1B	Blue	–	–	1	–	–	1	–	–	–	–	–	–	–	–	–	–	–
			AA1E	Parchment	–	–	1	–	–	1	–	–	–	–	–	–	–	–	–	–	–
			AA1F	Saddle	–	–	1	–	–	1	–	–	–	–	–	–	–	–	–	–	–
			AA1H	White	–	–	1	–	–	1	–	–	–	–	–	–	–	–	–	–	–
– – 23942/3 – – PANEL ASSY. – FRONT DOOR																					
NOTE: When ordering basic No. 23942 R.H.																					
				23943 L.H.																	
XA	54	23942	AC1A	Black	1	–	–	–	–	–	–	–	–	–	–	–	1	–	–	–	–
			AC1B	Blue	1	–	–	–	–	–	–	–	–	–	–	–	1	–	–	–	–
			AC1F	Saddle	1	–	–	–	–	–	–	–	–	–	–	–	1	–	–	–	–
			AC1P	Dark Grey	1	–	–	–	–	–	–	–	–	–	–	–	1	–	–	–	–
XA	54	23942	BC1A	Black	–	1	–	–	–	–	–	–	–	–	–	–	–	1	–	–	–
			BC1B	Blue	–	1	–	–	–	–	–	–	–	–	–	–	–	1	–	–	–
			BC1E	Parchment	–	1	–	–	–	–	–	–	–	–	–	–	–	1	–	–	–
			BC1F	Saddle	–	1	–	–	–	–	–	–	–	–	–	–	–	1	–	–	–
			BC1H	White	–	1	–	–	–	–	–	–	–	–	–	–	–	1	–	–	–
ZF	54	23942	AC1A	Black	–	–	1	–	–	1	–	–	–	–	–	–	–	–	–	–	–
			AC1B	Blue	–	–	1	–	–	1	–	–	–	–	–	–	–	–	–	–	–
			AC1E	Parchment	–	–	1	–	–	1	–	–	–	–	–	–	–	–	–	–	–
			AC1F	Saddle	–	–	1	–	–	1	–	–	–	–	–	–	–	–	–	–	–
			AC1H	White	–	–	1	–	–	1	–	–	–	–	–	–	–	–	–	–	–
XA	54	23942	CC1A	Black to 5/73	–	–	–	1	–	–	–	–	–	–	–	–	–	–	1	–	–
			CC1B	Blue to 5/73	–	–	–	1	–	–	–	–	–	–	–	–	–	–	1	–	–
			CC1E	Parchment to 5/73	–	–	–	1	–	–	–	–	–	–	–	–	–	–	1	–	–
			CC1F	Saddle to 5/73	–	–	–	1	–	–	–	–	–	–	–	–	–	–	1	–	–
			CC1H	White to 5/73	–	–	–	1	–	–	–	–	–	–	–	–	–	–	1	–	–
			CC1J	Burgundy to 5/73	–	–	–	1	–	–	–	–	–	–	–	–	–	–	1	–	–
XA	54	23942	EC1A	Black to 5/73	–	–	–	1	–	–	–	–	–	–	–	–	–	–	1	–	–
(Electric window)			EC1B	Blue to 5/73	–	–	–	1	–	–	–	–	–	–	–	–	–	–	1	–	–
			EC1E	Parchment to 5/73	–	–	–	1	–	–	–	–	–	–	–	–	–	–	1	–	–
			EC1F	Saddle to 5/73	–	–	–	1	–	–	–	–	–	–	–	–	–	–	1	–	–
			EC1H	White to 5/73	–	–	–	1	–	–	–	–	–	–	–	–	–	–	1	–	–
			EC1J	Burgundy to 5/73	–	–	–	1	–	–	–	–	–	–	–	–	–	–	1	–	–
XA	54	23942	DC1A	Black to 5/73	–	–	–	–	1	–	–	–	–	–	–	–	–	–	–	–	–
			DC1E	Parchment to 5/73	–	–	–	–	1	–	–	–	–	–	–	–	–	–	–	–	–
			DC1F	Saddle to 5/73	–	–	–	–	1	–	–	–	–	–	–	–	–	–	–	–	–
			DC1H	White to 5/73	–	–	–	–	1	–	–	–	–	–	–	–	–	–	–	–	–

PART NUMBER	COLOUR	BODY TYPE																	
		54							65			66		71			78		
		A	B	C	D	H	E	G	B	D	H	A	B	A	B	D	A	B	
-- 23942/3 -- PANEL ASSY. - FRONT DOOR (Continued)																			
XA 54 23942	FC1A	Black to 5/73	–	–	–	–	1	–	–	–	–	–	–	–	–	–	–	–	–
(Electric window)	FC1E	Parchment to 5/73	–	–	–	–	1	–	–	–	–	–	–	–	–	–	–	–	–
	FC1F	Saddle to 5/73	–	–	–	–	1	–	–	–	–	–	–	–	–	–	–	–	–
	FC1H	White to 5/73	–	–	–	–	1	–	–	–	–	–	–	–	–	–	–	–	–
XA 54 23942	DE1A	Black from 5/73	–	–	–	1	1	–	–	–	–	–	–	–	–	1	–	–	
	DE1B	Blue from 5/73	–	–	–	1	–	–	–	–	–	–	–	–	–	1	–	–	
	DE1E	Parchment from 5/73	–	–	–	1	1	–	–	–	–	–	–	–	–	1	–	–	
	DE1F	Saddle from 5/73	–	–	–	1	1	–	–	–	–	–	–	–	–	1	–	–	
	DE1H	White from 5/73	–	–	–	1	1	–	–	–	–	–	–	–	–	1	–	–	
	DE1J	Burgundy from 5/73	–	–	–	1	–	–	–	–	–	–	–	–	–	1	–	–	
XA 54 23942	FE1A	Black from 5/73	–	–	–	1	1	–	–	–	–	–	–	–	–	1	–	–	
(Electric windows)	FE1B	Blue from 5/73	–	–	–	1	–	–	–	–	–	–	–	–	–	1	–	–	
	FE1E	Parchment from 5/73	–	–	–	1	1	–	–	–	–	–	–	–	–	1	–	–	
	FE1F	Saddle from 5/73	–	–	–	1	1	–	–	–	–	–	–	–	–	1	–	–	
	FE1H	White from 5/73	–	–	–	1	1	–	–	–	–	–	–	–	–	1	–	–	
	FE1J	Burgundy from 5/73	–	–	–	1	–	–	–	–	–	–	–	–	–	1	–	–	
ZF 54 23942	CC1A	Black	–	–	–	–	–	1	–	–	–	–	–	–	–	–	–	–	
(Electric window)	CC1B	Blue	–	–	–	–	–	1	–	–	–	–	–	–	–	–	–	–	
	CC1E	Parchment	–	–	–	–	–	1	–	–	–	–	–	–	–	–	–	–	
	CC1F	Saddle	–	–	–	–	–	1	–	–	–	–	–	–	–	–	–	–	
	CC1H	White	–	–	–	–	–	1	–	–	–	–	–	–	–	–	–	–	
ZF 54 23942	BC1A	Black to 5/73	–	–	–	–	–	–	1	–	–	–	–	–	–	–	–	–	
	BC1B	Blue to 5/73	–	–	–	–	–	–	1	–	–	–	–	–	–	–	–	–	
	BC1E	Parchment to 5/73	–	–	–	–	–	–	1	–	–	–	–	–	–	–	–	–	
	BC1F	Saddle to 5/73	–	–	–	–	–	–	1	–	–	–	–	–	–	–	–	–	
	BC1H	White to 5/73	–	–	–	–	–	–	1	–	–	–	–	–	–	–	–	–	
	BC1J	Burgundy to 5/73	–	–	–	–	–	–	1	–	–	–	–	–	–	–	–	–	
ZF 54 23942	DC1A	Black to 5/73	–	–	–	–	–	–	1	–	–	–	–	–	–	–	–	–	
(Electric window)	DC1B	Blue to 5/73	–	–	–	–	–	–	1	–	–	–	–	–	–	–	–	–	
	DC1E	Parchment to 5/73	–	–	–	–	–	–	1	–	–	–	–	–	–	–	–	–	
	DC1F	Saddle to 5/73	–	–	–	–	–	–	1	–	–	–	–	–	–	–	–	–	
	DC1H	White to 5/73	–	–	–	–	–	–	1	–	–	–	–	–	–	–	–	–	
	DC1J	Burgundy to 5/73	–	–	–	–	–	–	1	–	–	–	–	–	–	–	–	–	
ZF 54 23942	BE1A	Black from 5/73	–	–	–	–	–	–	1	–	–	–	–	–	–	–	–	–	
	BE1B	Blue from 5/73	–	–	–	–	–	–	1	–	–	–	–	–	–	–	–	–	
	BE1E	Parchment from 5/73	–	–	–	–	–	–	1	–	–	–	–	–	–	–	–	–	
	BE1F	Saddle from 5/73	–	–	–	–	–	–	1	–	–	–	–	–	–	–	–	–	
	BE1H	White from 5/73	–	–	–	–	–	–	1	–	–	–	–	–	–	–	–	–	
	BE1J	Burgundy from 5/73	–	–	–	–	–	–	1	–	–	–	–	–	–	–	–	–	

PART NUMBER				COLOUR	BODY TYPE																	
					54							65			66		71			78	
					A	B	C	D	H	E	G	B	D	H	A	B	A	B	D	A	B
– – 23942/3 – – PANEL ASSY. – FRONT DOOR (Continued)																					
ZF	54	23942	DE1A	Black from 5/73	–	–	–	–	–	–	1	–	–	–	–	–	–	–	–	–	–
(Electric window)			DE1B	Blue from 5/73	–	–	–	–	–	–	1	–	–	–	–	–	–	–	–	–	–
			DE1E	Parchment from 5/73	–	–	–	–	–	–	1	–	–	–	–	–	–	–	–	–	–
			DE1F	Saddle from 5/73	–	–	–	–	–	–	1	–	–	–	–	–	–	–	–	–	–
			DE1H	White from 5/73	–	–	–	–	–	–	1	–	–	–	–	–	–	–	–	–	–
			DE1J	Burgundy from 5/73	–	–	–	–	–	–	1	–	–	–	–	–	–	–	–	–	–
XA	65	23942	AC1A	Black	–	–	–	–	–	–	–	1	–	–	–	1	–	–	–	–	–
			AC1B	Blue	–	–	–	–	–	–	–	1	–	–	–	1	–	–	–	–	–
			AC1E	Parchment	–	–	–	–	–	–	–	1	–	–	–	1	–	–	–	–	–
			AC1F	Saddle	–	–	–	–	–	–	–	1	–	–	–	1	–	–	–	–	–
			AC1H	White	–	–	–	–	–	–	–	1	–	–	–	1	–	–	–	–	–
			AC1P	Dark Grey	–	–	–	–	–	–	–	1	–	–	–	1	–	–	–	–	–
XA	65	23942	BC1A	Black	–	–	–	–	–	–	–	–	1	–	–	–	–	–	–	–	–
			BC1B	Blue	–	–	–	–	–	–	–	–	1	–	–	–	–	–	–	–	–
			BC1E	Parchment	–	–	–	–	–	–	–	–	1	–	–	–	–	–	–	–	–
			BC1F	Saddle	–	–	–	–	–	–	–	–	1	–	–	–	–	–	–	–	–
			BC1H	White	–	–	–	–	–	–	–	–	1	–	–	–	–	–	–	–	–
			BC1J	Burgundy	–	–	–	–	–	–	–	–	1	–	–	–	–	–	–	–	–
XA	65	23942	DW1A	Black	–	–	–	–	–	–	–	–	1	–	–	–	–	–	–	–	–
(Electric window)			DW1B	Blue	–	–	–	–	–	–	–	–	1	–	–	–	–	–	–	–	–
			DW1E	Parchment	–	–	–	–	–	–	–	–	1	–	–	–	–	–	–	–	–
			DW1F	Saddle	–	–	–	–	–	–	–	–	1	–	–	–	–	–	–	–	–
			DW1H	White	–	–	–	–	–	–	–	–	1	–	–	–	–	–	–	–	–
			DW1J	Burgundy	–	–	–	–	–	–	–	–	1	–	–	–	–	–	–	–	–
XA	65	23942	CC1A	Black	–	–	–	–	–	–	–	–	–	1	–	–	–	–	–	–	–
			CC1E	Parchment	–	–	–	–	–	–	–	–	–	1	–	–	–	–	–	–	–
			CC1F	Saddle	–	–	–	–	–	–	–	–	–	1	–	–	–	–	–	–	–
			CC1H	White	–	–	–	–	–	–	–	–	–	1	–	–	–	–	–	–	–
XA	65	23942	EW1A	Black	–	–	–	–	–	–	–	–	–	1	–	–	–	–	–	–	–
(Electric window)			EW1E	Parchment	–	–	–	–	–	–	–	–	–	1	–	–	–	–	–	–	–
			EW1F	Saddle	–	–	–	–	–	–	–	–	–	1	–	–	–	–	–	–	–
			EW1H	White	–	–	–	–	–	–	–	–	–	1	–	–	–	–	–	–	–
XA	66	23942	AC1A	Black	–	–	–	–	–	–	–	–	–	–	1	–	–	–	–	1	–
			AC1B	Blue	–	–	–	–	–	–	–	–	–	–	1	–	–	–	–	1	–
			AC1F	Saddle	–	–	–	–	–	–	–	–	–	–	1	–	–	–	–	1	–
			AC1P	Dark Grey	–	–	–	–	–	–	–	–	–	–	1	–	–	–	–	–	–
56903 S7				Screw	–	–	–	2	2	–	2	–	–	–	–	–	–	–	2	–	–
– – 24100 – – ARM REST – DOOR PULL																					
XA	54	24100	AB1A	Black	1	–	–	–	–	–	–	–	–	–	1	–	1	–	–	1	–
			AB1B	Blue	1	–	–	–	–	–	–	–	–	–	1	–	1	–	–	1	–
			AB1F	Saddle	1	–	–	–	–	–	–	–	–	–	1	–	1	–	–	1	–
55883 S2				Screw	8	–	–	–	–	–	–	–	–	–	8	–	8	–	–	8	–
– – 24478/9 – – COVER – LOWER PANEL CENTRE BODY PILLAR																					
NOTE: When ordering basic No. 24478 R.H.																					
				24479 L.H.																	
XA	66	24478	AA1P	Light Grey	–	–	–	–	–	–	–	–	–	–	1	1	–	–	–	1	–
– – 24592/3 – – COVER – CENTRE BODY PILLAR FINISH																					
NOTE: When ordering basic No. 24592 R.H.																					
				24593 L.H.																	
XA	54	24592	AB1A	Black	–	–	–	1	1	–	1	–	–	–	–	–	–	–	1	–	–
			AB1B	Blue	–	–	–	1	–	–	1	–	–	–	–	–	–	–	1	–	–
			AB1E	Parchment	–	–	–	1	1	–	1	–	–	–	–	–	–	–	1	–	–
			AB1F	Saddle	–	–	–	1	1	–	1	–	–	–	–	–	–	–	1	–	–

PART NUMBER				COLOUR	BODY TYPE																	
					54							65			66		71			78	
					A	B	C	D	H	E	G	B	D	H	A	B	A	B	D	A	B
-- 24592/3 -- COVER -- CENTRE BODY PILLAR FINISH (Continued)																					
			AB1H	White	–	–	–	1	1	–	1	–	–	–	–	–	–	–	1	–	–
			AB1J	Burgundy	–	–	–	1	–	–	1	–	–	–	–	–	–	–	1	–	–
-- 27406/7 -- PANEL ASSY. -- REAR DOOR																					
NOTE: When ordering basic No.				27406 R.H.																	
				27407 L.H.																	
XA	54	27406	AB1A	Black	1	–	–	–	–	–	–	–	–	–	–	–	1	–	–	–	–
			AB1B	Blue	1	–	–	–	–	–	–	–	–	–	–	–	1	–	–	–	–
			AB1F	Saddle	1	–	–	–	–	–	–	–	–	–	–	–	1	–	–	–	–
			AB1P	Dark Grey	1	–	–	–	–	–	–	–	–	–	–	–	1	–	–	–	–
XA	54	27406	BB1A	Black	–	1	–	–	–	–	–	–	–	–	–	–	–	1	–	–	–
			BB1B	Blue	–	1	–	–	–	–	–	–	–	–	–	–	–	1	–	–	–
			BB1E	Parchment	–	1	–	–	–	–	–	–	–	–	–	–	–	1	–	–	–
			BB1F	Saddle	–	1	–	–	–	–	–	–	–	–	–	–	–	1	–	–	–
			BB1H	White	–	1	–	–	–	–	–	–	–	–	–	–	–	1	–	–	–
ZF	54	27406	AB1A	Black	–	–	1	–	–	1	–	–	–	–	–	–	–	–	–	–	–
			AB1B	Blue	–	–	1	–	–	1	–	–	–	–	–	–	–	–	–	–	–
			AB1E	Parchment	–	–	1	–	–	1	–	–	–	–	–	–	–	–	–	–	–
			AB1F	Saddle	–	–	1	–	–	1	–	–	–	–	–	–	–	–	–	–	–
			AB1H	White	–	–	1	–	–	1	–	–	–	–	–	–	–	–	–	–	–
ZF	54	27406	CB1A	Black	–	–	1	–	–	1	–	–	–	–	–	–	–	–	–	–	–
(Electric window)			CB1B	Blue	–	–	1	–	–	1	–	–	–	–	–	–	–	–	–	–	–
			CB1E	Parchment	–	–	1	–	–	1	–	–	–	–	–	–	–	–	–	–	–
			CB1F	Saddle	–	–	1	–	–	1	–	–	–	–	–	–	–	–	–	–	–
			CB1H	White	–	–	1	–	–	1	–	–	–	–	–	–	–	–	–	–	–
XA	54	27406	CC1A	Black to 5/73	–	–	–	1	1	–	–	–	–	–	–	–	–	–	1	–	–
			CC1B	Blue to 5/73	–	–	–	1	–	–	–	–	–	–	–	–	–	–	1	–	–
			CC1E	Parchment to 5/73	–	–	–	1	1	–	–	–	–	–	–	–	–	–	1	–	–
			CC1F	Saddle to 5/73	–	–	–	1	1	–	–	–	–	–	–	–	–	–	1	–	–
			CC1H	White to 5/73	–	–	–	1	1	–	–	–	–	–	–	–	–	–	1	–	–
			CC1J	Burgundy to 5/73	–	–	–	1	–	–	–	–	–	–	–	–	–	–	1	–	–
XA	54	27406	CE1A	Black from 5/73	–	–	–	1	1	–	–	–	–	–	–	–	–	–	1	–	–
			CE1B	Blue from 5/73	–	–	–	1	–	–	–	–	–	–	–	–	–	–	1	–	–
			CE1E	Parchment from 5/73	–	–	–	1	1	–	–	–	–	–	–	–	–	–	1	–	–
			CE1F	Saddle from 5/73	–	–	–	1	1	–	–	–	–	–	–	–	–	–	1	–	–
			CE1H	White from 5/73	–	–	–	1	1	–	–	–	–	–	–	–	–	–	1	–	–
			CE1J	Burgundy from 5/73	–	–	–	1	–	–	–	–	–	–	–	–	–	–	1	–	–
XA	54	27406	DC1A	Black to 5/73	–	–	–	1	1	–	–	–	–	–	–	–	–	–	1	–	–
(Electric window)			DC1B	Blue to 5/73	–	–	–	1	–	–	–	–	–	–	–	–	–	–	1	–	–
			DC1E	Parchment to 5/73	–	–	–	1	1	–	–	–	–	–	–	–	–	–	1	–	–
			DC1F	Saddle to 5/73	–	–	–	1	1	–	–	–	–	–	–	–	–	–	1	–	–
			DC1H	White to 5/73	–	–	–	1	1	–	–	–	–	–	–	–	–	–	1	–	–
			DC1J	Burgundy to 5/73	–	–	–	1	–	–	–	–	–	–	–	–	–	–	1	–	–
XA	54	27406	DE1A	Black from 5/73	–	–	–	1	1	–	–	–	–	–	–	–	–	–	1	–	–
(Electric window)			DE1B	Blue from 5/73	–	–	–	1	–	–	–	–	–	–	–	–	–	–	1	–	–
			DE1E	Parchment from 5/73	–	–	–	1	1	–	–	–	–	–	–	–	–	–	1	–	–
			DE1F	Saddle—from 5/73	–	–	–	1	1	–	–	–	–	–	–	–	–	–	1	–	–
			DE1H	White from 5/73	–	–	–	1	1	–	–	–	–	–	–	–	–	–	1	–	–
			DE1J	Burgundy from 5/73	–	–	–	1	–	–	–	–	–	–	–	–	–	–	1	–	–

PART NUMBER				COLOUR	BODY TYPE																
					54							65			66		71			78	
					A	B	C	D	H	E	G	B	D	H	A	B	A	B	D	A	B
– – 27406/7 – – PANEL ASSY. – REAR DOOR (Continued)																					
ZF	54	27406	BC1A	Black to 5/73	–	–	–	–	–	–	1	–	–	–	–	–	–	–	–	–	–
			BC1B	Blue to 5/73	–	–	–	–	–	–	1	–	–	–	–	–	–	–	–	–	–
			BC1E	Parchment to 5/73	–	–	–	–	–	–	1	–	–	–	–	–	–	–	–	–	–
			BC1F	Saddle to 5/73	–	–	–	–	–	–	1	–	–	–	–	–	–	–	–	–	–
			BC1H	White to 5/73	–	–	–	–	–	–	1	–	–	–	–	–	–	–	–	–	–
			BC1J	Burgundy to 5/73	–	–	–	–	–	–	1	–	–	–	–	–	–	–	–	–	–
ZF	54	27406	BE1A	Black from 5/73	–	–	–	–	–	–	1	–	–	–	–	–	–	–	–	–	–
			BE1B	Blue from 5/73	–	–	–	–	–	–	1	–	–	–	–	–	–	–	–	–	–
			BE1E	Parchment from 5/73	–	–	–	–	–	–	1	–	–	–	–	–	–	–	–	–	–
			BE1F	Saddle from 5/73	–	–	–	–	–	–	1	–	–	–	–	–	–	–	–	–	–
			BE1H	White from 5/73	–	–	–	–	–	–	1	–	–	–	–	–	–	–	–	–	–
			BE1J	Burgundy from 5/73	–	–	–	–	–	–	1	–	–	–	–	–	–	–	–	–	–
ZF (Electric window)	54	27406	DC1A	Black to 5/73	–	–	–	–	–	–	1	–	–	–	–	–	–	–	–	–	–
			DC1B	Blue to 5/73	–	–	–	–	–	–	1	–	–	–	–	–	–	–	–	–	–
			DC1E	Parchment to 5/73	–	–	–	–	–	–	1	–	–	–	–	–	–	–	–	–	–
			DC1F	Saddle to 5/73	–	–	–	–	–	–	1	–	–	–	–	–	–	–	–	–	–
			DC1H	White to 5/73	–	–	–	–	–	–	1	–	–	–	–	–	–	–	–	–	–
			DC1J	Burgundy to 5/73	–	–	–	–	–	–	1	–	–	–	–	–	–	–	–	–	–
ZF (Electric window)	54	27406	DE1A	Black from 5/73	–	–	–	–	–	–	1	–	–	–	–	–	–	–	–	–	–
			DE1B	Blue from 5/73	–	–	–	–	–	–	1	–	–	–	–	–	–	–	–	–	–
			DE1E	Parchment from 5/73	–	–	–	–	–	–	1	–	–	–	–	–	–	–	–	–	–
			DE1F	Saddle from 5/73	–	–	–	–	–	–	1	–	–	–	–	–	–	–	–	–	–
			DE1H	White from 5/73	–	–	–	–	–	–	1	–	–	–	–	–	–	–	–	–	–
			DE1J	Burgundy from 5/73	–	–	–	–	–	–	1	–	–	–	–	–	–	–	–	–	–
56903 S46				Screw	–	–	–	2	2	–	2	–	–	–	–	–	–	–	2	–	–
– – 27430/1 – – TRIM COVER – REAR DOOR UPPER																					
NOTE: When ordering basic No. 27430 R.H. 27431 L.H.																					
XA	54	27430	AA1A	Black	–	–	1	–	–	1	–	–	–	–	–	–	–	–	–	–	–
			AA1B	Blue	–	–	1	–	–	1	–	–	–	–	–	–	–	–	–	–	–
			AA1E	Parchment	–	–	1	–	–	1	–	–	–	–	–	–	–	–	–	–	–
			AA1F	Saddle	–	–	1	–	–	1	–	–	–	–	–	–	–	–	–	–	–
			AA1H	White	–	–	1	–	–	1	–	–	–	–	–	–	–	–	–	–	–
– – 27452 – – ASH TRAY ASSY. – REAR																					
XW	54	27452	A1A	Black	–	–	–	–	–	–	–	2	–	–	–	–	–	–	–	–	–
			A1J	Burgundy	–	–	–	–	–	–	–	2	–	–	–	–	–	–	–	–	–
XY	54	27452	A2B	Blue	–	–	–	–	–	–	–	2	–	–	–	–	–	–	–	–	–
			A1E	Parchment	–	–	–	–	–	–	–	2	–	–	–	–	–	–	–	–	–
			A3F	Saddle	–	–	–	–	–	–	–	2	–	–	–	–	–	–	–	–	–
			A1H	White	–	–	–	–	–	–	–	2	–	–	–	–	–	–	–	–	–

PART NUMBER				COLOUR	BODY TYPE																	
					54							65			66		71			78	
					A	B	C	D	H	E	G	B	D	H	A	B	A	B	D	A	B
-- 27540/1 -- ARM REST -- FRONT DOOR																					
NOTE: When ordering basic No. 27540 R.H.																					
				27541 L.H.																	
XA	54	27540	AB1A	Black	—	—	—	1	1	—	1	—	1	1	—	—	—	—	1	—	—
			AB1B	Blue	—	—	—	1	—	—	1	—	1	—	—	—	—	—	1	—	—
			AB1E	Parchment	—	—	—	1	1	—	1	—	1	—	—	—	—	—	1	—	—
			AB1F	Saddle	—	—	—	1	1	—	1	—	1	1	—	—	—	—	1	—	—
			AB1H	White	—	—	—	1	1	—	1	—	1	—	—	—	—	—	1	—	—
			AB1J	Burgundy	—	—	—	1	—	—	1	—	1	—	—	—	—	—	1	—	—
55883 S2				Screw	—	—	—	a/r	a/r	—	a/r	—	a/r	a/r	—	—	—	—	a/r	—	—
380344 S				Nut	—	—	—	a/r	a/r	—	a/r	—	a/r	a/r	—	—	—	—	a/r	—	—
117214 ES				Pop Rivet	—	—	—	a/r	a/r	—	a/r	—	a/r	a/r	—	—	—	—	a/r	—	—
120253 ES32				Clip	—	—	—	a/r	a/r	—	a/r	—	a/r	a/r	—	—	—	—	a/r	—	—
-- 27540 -- ARM REST -- FRONT DOOR																					
XA	54	27540	BA2A	Black	—	2	2	—	—	2	—	2	—	—	—	2	—	2	—	—	—
			BA2A	OSO G2002	2	—	—	—	—	—	—	—	—	—	—	—	2	—	—	—	—
			BA1B	Blue	—	2	2	—	—	2	—	2	—	—	—	2	—	2	—	—	—
			BA1B	OSO G2002	2	—	—	—	—	—	—	—	—	—	—	—	2	—	—	—	—
			BA1E	Parchment	—	2	2	—	—	2	—	2	—	—	—	2	—	2	—	—	—
			BA1E	OSO G2002	2	—	—	—	—	—	—	—	—	—	—	—	2	—	—	—	—
			BA2F	Saddle	—	2	2	—	—	2	—	2	—	—	—	2	—	2	—	—	—
			BA2F	OSO G2002	2	—	—	—	—	—	—	—	—	—	—	—	2	—	—	—	—
			BA2H	White	—	2	2	—	—	2	—	2	—	—	—	2	—	2	—	—	—
			BA2H	OSO G2002	2	—	—	—	—	—	—	—	—	—	—	—	2	—	—	—	—
			BA1J	Burgundy	—	2	2	—	—	2	—	2	—	—	—	2	—	2	—	—	—
			BA1J	OSO G2002	2	—	—	—	—	—	—	—	—	—	—	—	2	—	—	—	—
55883 S2				Screw	a/r	a/r	a/r	—	—	a/r	—	a/r	—	—	—	a/r	a/r	a/r	—	—	—
380344 S				Nut	a/r	a/r	a/r	—	—	a/r	—	a/r	—	—	—	a/r	a/r	a/r	—	—	—
-- 27540 -- ARM REST -- REAR DOOR																					
XA	54	27540	BA2A	Black	—	2	2	2	2	2	2	—	—	—	—	—	—	2	2	—	—
			BA2A	OSO G2002	2	—	—	—	—	—	—	—	—	—	—	—	2	—	—	—	—
			BA1B	Blue	—	2	2	2	2	2	2	—	—	—	—	—	—	2	2	—	—
			BA1B	OSO G2002	2	—	—	—	—	—	—	—	—	—	—	—	2	—	—	—	—
			BA1E	Parchment	—	2	2	2	2	2	2	—	—	—	—	—	—	2	2	—	—
			BA1E	OSO G2002	2	—	—	—	—	—	—	—	—	—	—	—	2	—	—	—	—
			BA2F	Saddle	—	2	2	2	2	2	2	—	—	—	—	—	—	2	2	—	—
			BA2F	OSO G2002	2	—	—	—	—	—	—	—	—	—	—	—	2	—	—	—	—
			BA2H	White	—	2	2	2	2	2	2	—	—	—	—	—	—	2	2	—	—
			BA2H	OSO G2002	2	—	—	—	—	—	—	—	—	—	—	—	2	—	—	—	—
			BA1J	Burgundy	—	2	2	2	2	2	2	—	—	—	—	—	—	2	2	—	—
			BA1J	OSO G2002	2	—	—	—	—	—	—	—	—	—	—	—	2	—	—	—	—
55883 S2				Screw	a/r	a/r	a/r	a/r	a/r	a/r	a/r	—	—	—	—	—	a/r	a/r	a/r	—	—
380344 S				Nut	a/r	a/r	a/r	a/r	a/r	a/r	a/r	—	—	—	—	—	a/r	a/r	a/r	—	—
-- 29024 -- HOOK -- COAT																					
C8AZ	62	29024	A2A	Black	—	—	—	2	2	—	2	—	2	2	—	—	—	—	2	—	—
			A2A	OSO G2013	2	2	2	—	—	2	—	—	—	—	—	—	—	—	—	—	—
			A1B	Blue	—	—	—	2	—	—	2	—	2	—	—	—	—	—	2	—	—
			A1E	Parchment	—	—	—	2	2	—	2	—	2	2	—	—	—	—	2	—	—
			A3F	Saddle	—	—	—	2	—	—	2	—	2	2	—	—	—	—	2	—	—
			A1J	Burgundy	—	—	—	2	—	—	2	—	2	—	—	—	—	—	2	—	—
			A1P	Light Grey	1	2	2	2	2	2	2	2	2	2	—	—	1	2	2	—	—

PART NUMBER				COLOUR	BODY TYPE																	
					54							65			66		71			78	
					A	B	C	D	H	E	G	B	D	H	A	B	A	B	D	A	B
– – 31012/3 – – PANEL ASSY. – QUARTER																					
NOTE: When ordering basic No.				31012 R.H.																	
				31013 L.H.																	
XA	65	31012	CA1A	Black	–	–	–	–	–	–	–	1	–	–	–	–	–	–	–	–	–
			CA1B	Blue	–	–	–	–	–	–	–	1	–	–	–	–	–	–	–	–	–
			CA1E	Parchment	–	–	–	–	–	–	–	1	–	–	–	–	–	–	–	–	–
			CA1F	Saddle	–	–	–	–	–	–	–	1	–	–	–	–	–	–	–	–	–
			CA1H	White	–	–	–	–	–	–	–	1	–	–	–	–	–	–	–	–	–
XA	65	31012	AB1A	Black	–	–	–	–	–	–	–	–	1	1	–	–	–	–	–	–	–
			AB1B	Blue	–	–	–	–	–	–	–	–	1	–	–	–	–	–	–	–	–
			AB1E	Parchment	–	–	–	–	–	–	–	–	1	1	–	–	–	–	–	–	–
			AB1F	Saddle	–	–	–	–	–	–	–	–	1	1	–	–	–	–	–	–	–
			AB1H	White	–	–	–	–	–	–	–	–	1	1	–	–	–	–	–	–	–
			AB1J	Burgundy	–	–	–	–	–	–	–	–	1	–	–	–	–	–	–	–	–
XA	65	31012	BB1A	Black	–	–	–	–	–	–	–	–	1	1	–	–	–	–	–	–	–
(Electric windows)			BB1B	Blue	–	–	–	–	–	–	–	–	1	–	–	–	–	–	–	–	–
			BB1E	Parchment	–	–	–	–	–	–	–	–	1	1	–	–	–	–	–	–	–
			BB1F	Saddle	–	–	–	–	–	–	–	–	1	1	–	–	–	–	–	–	–
			BB1H	White	–	–	–	–	–	–	–	–	1	1	–	–	–	–	–	–	–
			BB1J	Burgundy	–	–	–	–	–	–	–	–	1	–	–	–	–	–	–	–	–
– – 310A12/3 – – PANEL – QUARTER TRIM UPPER																					
NOTE: When ordering basic No.				310A12 R.H.																	
				310A13 L.H.																	
XA	66	310A12	AA1H	Light Grey	–	–	–	–	–	–	–	–	–	–	1	1	–	–	–	–	–
XA	78	310A12	AA1H	Light Grey to 6/73	–	–	–	–	–	–	–	–	–	–	–	–	–	–	–	1	–
XA	78	310A12	AC1H	Light Grey from 6/73	–	–	–	–	–	–	–	–	–	–	–	–	–	–	–	1	–
– – 31016/7 – – COVER ASSY. – QUARTER WHEEL HOUSE																					
NOTE: When ordering basic No.				31016 R.H.																	
				31017 L.H.																	
XA	71	31016	AA1A	Black	–	–	–	–	–	–	–	–	–	–	–	–	–	1	–	–	–
			AA1B	Blue –O.N.R.	–	–	–	–	–	–	–	–	–	–	–	–	–	1	–	–	–
			AA2E	Parchment	–	–	–	–	–	–	–	–	–	–	–	–	–	1	–	–	–
			AA1F	Saddle–O.N.R.	–	–	–	–	–	–	–	–	–	–	–	–	–	1	–	–	–
			AA1P	Dark Grey–O.N.R.	–	–	–	–	–	–	–	–	–	–	–	–	–	1	–	–	–
XA	71	31016	AA2A	Black	–	–	–	–	–	–	–	–	–	–	–	–	–	–	1	–	–
			AA2B	Blue	–	–	–	–	–	–	–	–	–	–	–	–	–	–	1	–	–
			AA1E	Parchment	–	–	–	–	–	–	–	–	–	–	–	–	–	–	1	–	–
			AA2F	Saddle	–	–	–	–	–	–	–	–	–	–	–	–	–	–	1	–	–
			AA1H	White	–	–	–	–	–	–	–	–	–	–	–	–	–	–	1	–	–
			AA1J	Burgundy	–	–	–	–	–	–	–	–	–	–	–	–	–	–	1	–	–
– – 310A64/5 – – PANEL ASSY. – QUARTER LOWER																					
NOTE: When ordering basic No.				310A64 R.H.																	
				310A65 L.H.																	
XA	65	310A64	AA1A	Black	–	–	–	–	–	–	–	1	1	1	–	–	–	–	–	–	–
			AA1B	Blue	–	–	–	–	–	–	–	1	1	–	–	–	–	–	–	–	–
			AA1E	Parchment	–	–	–	–	–	–	–	1	1	1	–	–	–	–	–	–	–
			AA1F	Saddle	–	–	–	–	–	–	–	1	1	1	–	–	–	–	–	–	–
			AA1H	White	–	–	–	–	–	–	–	1	1	1	–	–	–	–	–	–	–
			AA1J	Burgundy	–	–	–	–	–	–	–	–	1	–	–	–	–	–	–	–	–

PART NUMBER				COLOUR	BODY TYPE																	
					54							65			66		71			78		
					A	B	C	D	H	E	G	B	D	H	A	B	A	B	D	A	B	
– – 31112/3 – – PANEL ASSY. – QTR. REAR (REFER ALSO 31148/9)																						
NOTE: When ordering basic No.			31112	R.H.																		
			31113	L.H.																		
XA	71	31112	AD1A	Black	–	–	–	–	–	–	–	–	–	–	–	–	1	1	–	–	–	
			AC1B	Blue	–	–	–	–	–	–	–	–	–	–	–	–	1	1	–	–	–	
			AC1F	Saddle	–	–	–	–	–	–	–	–	–	–	–	–	1	1	–	–	–	
V 388192 S1A			(Clip)	Black	–	–	–	–	–	–	–	–	–	–	–	–	14	14	–	–	–	
V 388192 S1B			(Clip)	Blue	–	–	–	–	–	–	–	–	–	–	–	–	14	14	–	–	–	
V 388192 S1F			(Clip)	Saddle	–	–	–	–	–	–	–	–	–	–	–	–	14	14	–	–	–	
– – 31136/7 – – PANEL ASSY. – QTR.																						
NOTE: When ordering basic No.			31136	R.H.																		
			31137	L.H.																		
XA	54	31136	AB1A	Black	1	1	1	1	1	–	–	–	–	–	–	–	–	–	–	–	–	
			AB1B	Blue	1	1	1	1	–	–	–	–	–	–	–	–	–	–	–	–	–	
			AB1E	Parchment	–	1	1	1	1	–	–	–	–	–	–	–	–	–	–	–	–	
			AB1F	Saddle	1	1	1	1	1	–	–	–	–	–	–	–	–	–	–	–	–	
			AB1H	White	–	1	1	1	1	–	–	–	–	–	–	–	–	–	–	–	–	
			AB1J	Burgundy	–	–	–	1	–	–	–	–	–	–	–	–	–	–	–	–	–	
ZF	54	31136	AB1A	Black	–	–	–	–	–	1	1	–	–	–	–	–	–	–	–	–	–	
			AB1B	Blue	–	–	–	–	–	1	1	–	–	–	–	–	–	–	–	–	–	
			AB1E	Parchment	–	–	–	–	–	1	1	–	–	–	–	–	–	–	–	–	–	
			AB1F	Saddle	–	–	–	–	–	1	1	–	–	–	–	–	–	–	–	–	–	
			AB1H	White	–	–	–	–	–	1	1	–	–	–	–	–	–	–	–	–	–	
			AB1J	Burgundy	–	–	–	–	–	1	1	–	–	–	–	–	–	–	–	–	–	
XA	71	31136	AC1A	Black	–	–	–	–	–	–	–	–	–	–	–	–	1	1	1	–	–	
			AC1B	Blue	–	–	–	–	–	–	–	–	–	–	–	–	1	1	1	–	–	
			AC1E	Parchment	–	–	–	–	–	–	–	–	–	–	–	–	–	1	1	–	–	
			AC1F	Saddle	–	–	–	–	–	–	–	–	–	–	–	–	1	1	1	–	–	
			AC1H	White	–	–	–	–	–	–	–	–	–	–	–	–	–	1	1	–	–	
			AC1J	Burgundy	–	–	–	–	–	–	–	–	–	–	–	–	–	–	1	–	–	
– – 31148/9 – – PANEL ASSY. – QTR. REAR (REFER ALSO 31112/3)																						
NOTE: When ordering basic No.			31148	R.H.																		
			31149	L.H.																		
XA	71	31148	AA1A	Black	–	–	–	–	–	–	–	–	–	–	–	–	–	–	1	–	–	
			AA1B	Blue	–	–	–	–	–	–	–	–	–	–	–	–	–	–	1	–	–	
			AA1E	Parchment	–	–	–	–	–	–	–	–	–	–	–	–	–	–	1	–	–	
			AA1F	Saddle	–	–	–	–	–	–	–	–	–	–	–	–	–	–	1	–	–	
			AA1H	White	–	–	–	–	–	–	–	–	–	–	–	–	–	–	1	–	–	
			AA1J	Burgundy	–	–	–	–	–	–	–	–	–	–	–	–	–	–	1	–	–	
XA	71	31148	AA2A	Black	–	–	–	–	–	–	–	–	–	–	–	–	–	1	–	–	–	
			AA2B	Blue	–	–	–	–	–	–	–	–	–	–	–	–	–	1	–	–	–	
			AA2F	Saddle	–	–	–	–	–	–	–	–	–	–	–	–	–	1	–	–	–	
			AA2H	White	–	–	–	–	–	–	–	–	–	–	–	–	–	1	–	–	–	
			AA1P	Dark Grey	–	–	–	–	–	–	–	–	–	–	–	–	–	1	–	–	–	
– – 45456 – – FLOOR MAT – LUGGAGE COMPARTMENT																						
XA	54	45456	EB1A	Black	1	1	1	1	1	–	–	–	–	–	–	–	–	–	–	–	–	
(Large tank)			FB1A	Black–O.N.R.	–	–	–	–	1	–	–	–	–	–	–	–	–	–	–	–	–	
			BB1A	Black	–	–	–	–	–	–	–	1	1	1	–	–	–	–	–	–	–	
(Large tank)			CB1A	Black–O.N.R.	–	–	–	–	–	–	–	–	–	1	–	–	–	–	–	–	–	
ZF	54	45456	BA1A	Black	–	–	–	–	–	1	1	–	–	–	–	–	–	–	–	–	–	

PART NUMBER				COLOUR	BODY TYPE																	
					54							65			66		71			78		
					A	B	C	D	H	E	G	B	D	H	A	B	A	B	D	A	B	
– – 46320/1 – – PANEL ASSY. – BACK DOOR – (DEALER SPRAY TO SUIT)																						
NOTE: When ordering basic No.				46320 R.H.																		
				46321 L.H.																		
XA	78	46320	AA1A	Black	–	–	–	–	–	–	–	–	–	–	–	–	–	–	–	1	–	
V 388192	S1A		(Clip)	Black	–	–	–	–	–	–	–	–	–	–	–	–	–	–	–	20	–	
V 388192	S1B		(Clip)	Blue	–	–	–	–	–	–	–	–	–	–	–	–	–	–	–	20	–	
V 388192	S1F		(Clip)	Saddle	–	–	–	–	–	–	–	–	–	–	–	–	–	–	–	20	–	
V 388192	S1P		(Clip)	Dark Grey	–	–	–	–	–	–	–	–	–	–	–	–	–	–	–	20	–	
– – 46656 – – PANEL – PACKAGE TRAY																						
XA	65	46656	AB1A	Black	–	–	–	–	–	–	–	1	1	1	–	–	–	–	–	–	–	
			AB1B	Blue	–	–	–	–	–	–	–	1	1	–	–	–	–	–	–	–	–	
			AB2F	Saddle	–	–	–	–	–	–	–	1	1	1	–	–	–	–	–	–	–	
			AB1J	Burgundy	–	–	–	–	–	–	–	–	1	–	–	–	–	–	–	–	–	
– – 466A56 – – PANEL ASSY. – PACKAGE TRAY																						
XA	65	466A56	AA1A	Black	–	–	–	–	–	–	–	1	–	–	–	–	–	–	–	–	–	
			AA1B	Blue	–	–	–	–	–	–	–	1	–	–	–	–	–	–	–	–	–	
			AA2E	Parchment	–	–	–	–	–	–	–	1	–	–	–	–	–	–	–	–	–	
			AA1F	Saddle	–	–	–	–	–	–	–	1	–	–	–	–	–	–	–	–	–	
			AA1H	White	–	–	–	–	–	–	–	1	–	–	–	–	–	–	–	–	–	
			AA1P	Dark Grey	–	–	–	–	–	–	–	1	–	–	–	–	–	–	–	–	–	
XA	65	466A56	AA2A	Black	–	–	–	–	–	–	–	–	1	1	–	–	–	–	–	–	–	
			AA2B	Blue	–	–	–	–	–	–	–	–	1	–	–	–	–	–	–	–	–	
			AA1E	Parchment	–	–	–	–	–	–	–	–	1	1	–	–	–	–	–	–	–	
			AA2F	Saddle	–	–	–	–	–	–	–	–	1	1	–	–	–	–	–	–	–	
			AA2H	White	–	–	–	–	–	–	–	–	1	1	–	–	–	–	–	–	–	
			AA1J	Burgundy	–	–	–	–	–	–	–	–	1	–	–	–	–	–	–	–	–	
– – 466B56/7 – – PANEL ASSY. – PACKAGE TRAY SIDE																						
NOTE: When ordering basic No.				466B56 R.H.																		
				466B57 L.H.																		
XA	65	466B56	AA1A	Black	–	–	–	–	–	–	–	1	–	–	–	–	–	–	–	–	–	
			AA1B	Blue	–	–	–	–	–	–	–	1	–	–	–	–	–	–	–	–	–	
			AA2E	Parchment	–	–	–	–	–	–	–	1	–	–	–	–	–	–	–	–	–	
			AA1F	Saddle	–	–	–	–	–	–	–	1	–	–	–	–	–	–	–	–	–	
			AA1H	White	–	–	–	–	–	–	–	1	–	–	–	–	–	–	–	–	–	
			AA1P	Dark Grey	–	–	–	–	–	–	–	1	–	–	–	–	–	–	–	–	–	
XA	65	466B56	AA2A	Black	–	–	–	–	–	–	–	–	1	1	–	–	–	–	–	–	–	
			AA2B	Blue	–	–	–	–	–	–	–	–	1	–	–	–	–	–	–	–	–	
			AA1E	Parchment	–	–	–	–	–	–	–	–	1	1	–	–	–	–	–	–	–	
			AA2F	Saddle	–	–	–	–	–	–	–	–	1	1	–	–	–	–	–	–	–	
			AA2H	White	–	–	–	–	–	–	–	–	1	1	–	–	–	–	–	–	–	
			AA1J	Burgundy	–	–	–	–	–	–	–	–	1	–	–	–	–	–	–	–	–	
– – 46668 – – PANEL – PACKAGE TRAY																						
XA	54	46668	AA1A	Black	1	1	1	1	1	–	–	–	–	–	–	–	–	–	–	–	–	
			AA1B	Blue	1	1	1	1	–	–	–	–	–	–	–	–	–	–	–	–	–	
			AA1F	Saddle	1	1	1	1	1	–	–	–	–	–	–	–	–	–	–	–	–	
			AA1J	Burgundy	–	–	–	1	–	–	–	–	–	–	–	–	–	–	–	–	–	
XA	54	46668	BA1A	Black	1	1	1	1	1	–	–	–	–	–	–	–	–	–	–	–	–	
(Export)			BA1B	Blue	1	1	1	1	1	–	–	–	–	–	–	–	–	–	–	–	–	
			BA1F	Saddle	1	1	1	1	1	–	–	–	–	–	–	–	–	–	–	–	–	
			BA1J	Burgundy	1	1	1	1	1	–	–	–	–	–	–	–	–	–	–	–	–	

PART NUMBER				COLOUR	BODY TYPE																
					54							65			66		71			78	
					A	B	C	D	H	E	G	B	D	H	A	B	A	B	D	A	B
– – 46668 – – PANEL – PACKAGE TRAY (Continued)																					
ZF	54	46668	AA1A	Black	–	–	–	–	–	1	1	–	–	–	–	–	–	–	–	–	–
			AA1B	Blue	–	–	–	–	–	1	1	–	–	–	–	–	–	–	–	–	–
			AA1F	Saddle	–	–	–	–	–	1	1	–	–	–	–	–	–	–	–	–	–
			AA1J	Burgundy	–	–	–	–	–	–	1	–	–	–	–	–	–	–	–	–	–
ZF	54	46668	BA1A	Black	–	–	–	–	–	1	1	–	–	–	–	–	–	–	–	–	–
(Export)			BA1B	Blue	–	–	–	–	–	1	1	–	–	–	–	–	–	–	–	–	–
			BA1F	Saddle	–	–	–	–	–	1	1	–	–	–	–	–	–	–	–	–	–
			BA1J	Burgundy	–	–	–	–	–	1	1	–	–	–	–	–	–	–	–	–	–
– – 51916 – – HEADLINING ASSY. – LESS SUPPORTS – EXCEPT WITH SUN ROOF																					
XA	54	51916	AA1A	Black	–	–	–	1	1	–	1	–	–	–	–	–	–	–	–	–	–
			AA1A	OSO G2013	1	1	1	–	–	1	–	–	–	–	–	–	–	–	–	–	–
			AA1B	Blue	–	–	–	1	–	–	1	–	–	–	–	–	–	–	–	–	–
			AA1E	Parchment	–	–	–	1	1	–	1	–	–	–	–	–	–	–	–	–	–
			AA1F	Saddle	–	–	–	1	1	–	1	–	–	–	–	–	–	–	–	–	–
			AA1J	Burgundy	–	–	–	1	–	–	1	–	–	–	–	–	–	–	–	–	–
			AA1P	Light Grey	1	1	1	1	1	1	1	–	–	–	–	–	–	–	–	–	–
XA	65	51916	AA1A	Black–O.N.R.	–	–	–	–	–	–	–	–	1	1	–	–	–	–	–	–	–
			AA1B	Blue–O.N.R.	–	–	–	–	–	–	–	–	1	–	–	–	–	–	–	–	–
			AA1E	Parchment	–	–	–	–	–	–	–	–	1	1	–	–	–	–	–	–	–
			AA1F	Saddle–O.N.R.	–	–	–	–	–	–	–	–	1	1	–	–	–	–	–	–	–
			AA1J	Burgundy–O.N.R.	–	–	–	–	–	–	–	–	1	–	–	–	–	–	–	–	–
			AA1P	Light Grey	–	–	–	–	–	–	–	1	1	1	–	–	–	–	–	–	–
XA	66	51916	AA1P	Light Grey	–	–	–	–	–	–	–	–	–	–	1	1	–	–	–	–	–
XA	71	51916	AA1A	Black	–	–	–	–	–	–	–	–	–	–	–	–	–	–	1	–	–
			AA1B	Blue	–	–	–	–	–	–	–	–	–	–	–	–	–	–	1	–	–
			AA1E	Parchment	–	–	–	–	–	–	–	–	–	–	–	–	–	–	1	–	–
			AA1F	Saddle–O.N.R.	–	–	–	–	–	–	–	–	–	–	–	–	–	–	1	–	–
			AA1J	Burgundy	–	–	–	–	–	–	–	–	–	–	–	–	–	–	1	–	–
			AA1P	Light Grey	–	–	–	–	–	–	–	–	–	–	–	–	1	1	1	–	–
XA	78	51916	AA1P	Light Grey to 6/73	–	–	–	–	–	–	–	–	–	–	–	–	–	–	–	1	–
XA	78	51916	BA1P	Light Grey from 6/73	–	–	–	–	–	–	–	–	–	–	–	–	–	–	–	1	–
XA		20004	A01	Light Grey– H/lining material	1	1	1	1	1	1	1	1	1	1	1	1	1	1	1	1	–
– – 51916 – – HEADLINING ASSY. – LESS SUPPORTS – WITH SUN ROOF																					
XA	54	51916	BA1P	Light Grey	1	1	1	1	1	1	1	–	–	–	–	–	–	–	–	–	–
XA	65	51916	BA1P	Light Grey	–	–	–	–	–	–	–	1	1	1	–	–	–	–	–	–	–
– – 51917 – – STRIP ASSY. – HEADLINING REAR																					
XA	78	51917	AA1A	Black	–	–	–	–	–	–	–	–	–	–	–	–	–	–	–	1	–
			AA1B	Blue	–	–	–	–	–	–	–	–	–	–	–	–	–	–	–	1	–
			AA1F	Saddle	–	–	–	–	–	–	–	–	–	–	–	–	–	–	–	1	–
			BA1P	Light Grey	–	–	–	–	–	–	–	–	–	–	–	–	–	–	–	1	–
– – 53700 – – COVER – VINYL ROOF (CUT HOLE FOR SLIDING SUN ROOF)																					
XA	54	53700	AA1A	Black	1	1	1	1	1	1	1	–	–	–	–	–	–	–	–	–	–
			AA1B	Blue	1	1	1	1	1	1	1	–	–	–	–	–	–	–	–	–	–
			AA1E	Parchment	1	1	1	1	1	1	1	–	–	–	–	–	–	–	–	–	–
			AA1F	Brown	1	1	1	1	–	1	1	–	–	–	–	–	–	–	–	–	–
			AA1R	Green	1	1	1	1	1	1	1	–	–	–	–	–	–	–	–	–	–

PART NUMBER			COLOUR	BODY TYPE																	
				54							65			66		71			78	
				A	B	C	D	H	E	G	B	D	H	A	B	A	B	D	A	B
– – 53700 – – COVER – VINYL ROOF (Continued)																				
XA	65	53700	AA1A	Black	–	–	–	–	–	–	–	1	1	1	–	–	–	–	–	–	–
			AA1B	Blue	–	–	–	–	–	–	–	1	1	1	–	–	–	–	–	–	–
			AA1E	Parchment	–	–	–	–	–	–	–	1	1	1	–	–	–	–	–	–	–
			AA1F	Brown	–	–	–	–	–	–	–	1	1	–	–	–	–	–	–	–	–
			AA1R	Green	–	–	–	–	–	–	–	1	1	1	–	–	–	–	–	–	–
– – 53700 – – COVER – SLIDING ROOF PANEL																				
XA	54	53700	BA1A	Black	1	1	1	1	1	1	1	–	–	–	–	–	–	–	–	–	–
			BA1B	Blue	1	1	1	1	1	1	1	–	–	–	–	–	–	–	–	–	–
			BA1E	Parchment	1	1	1	1	1	1	1	–	–	–	–	–	–	–	–	–	–
			BA1F	Brown	1	1	1	1	–	1	1	–	–	–	–	–	–	–	–	–	–
			BA1R	Green	1	1	1	1	1	1	1	–	–	–	–	–	–	–	–	–	–
XA	65	53700	BA1A	Black	–	–	–	–	–	–	–	1	1	1	–	–	–	–	–	–	–
			BA1B	Blue	–	–	–	–	–	–	–	1	1	1	–	–	–	–	–	–	–
			BA1E	Parchment	–	–	–	–	–	–	–	1	1	1	–	–	–	–	–	–	–
			BA1F	Brown	–	–	–	–	–	–	–	1	1	–	–	–	–	–	–	–	–
			BA1R	Green	–	–	–	–	–	–	–	1	1	1	–	–	–	–	–	–	–
– – 60004/5 – – SEAT ASSY. – FRONT																				
Refer Soft Trim Seat Catalogue – Cat 133																				
– – 60032 – – BACK ASSY. – REAR SEAT																				
Refer Soft Trim Seat Catalogue – Cat. 133																				
– – 600A46 – – BELT ASSY. – REAR SEAL LAP (REFER 61200)																				
– – 60050/1 – – CUSHION ASSY. – FRONT SEAT																				
Refer Soft Trim Seat Catalogue – Cat. 133																				
– – 60080 – – CUSHION ASSY. – REAR SEAT																				
Refer Soft Trim Seat Catalogue – Cat. 133																				
– – 60136/7 – – BACK ASSY. – FRONT SEAT																				
Refer Soft Trim Seat Catalogue – Cat. 133																				
– – 602A07 – – PULL TAB – SEAT BELT																				
XA	54	602A07	A	Black	4	4	4	4	4	4	4	4	4	4	2	2	4	4	4	2	–
			B	Blue	4	4	4	4	4	4	4	4	4	4	2	2	4	4	4	2	–
"B" type			F	Saddle	4	4	4	4	4	4	4	4	4	4	2	2	4	4	4	2	–
			J	Burgundy	4	4	4	4	4	4	4	4	4	4	2	2	4	4	4	2	–
– – 602A08 – – TIDY TAB – SEAT BELT																				
XA	54	602A08	A	Black	4	4	4	4	4	4	4	4	4	4	2	2	4	4	4	2	–
			B	Blue	4	4	4	4	4	4	4	4	4	4	2	2	4	4	4	2	–
"B" type			F	Saddle	4	4	4	4	4	4	4	4	4	4	2	2	4	4	4	2	–
			J	Burgundy	4	4	4	4	4	4	4	4	4	4	2	2	4	4	4	2	–
– – 602A09 – – POUCH – SEAT BELT																				
XA	54	602A09	A	Black	2	2	2	2	2	2	2	2	2	2	2	2	2	2	2	2	–
Lap belts "B" type			B	Blue	2	2	2	2	2	2	2	2	2	2	2	2	2	2	2	2	–
			F	Saddle	2	2	2	2	2	2	2	2	2	2	2	2	2	2	2	2	–
			J	Burgundy	2	2	2	2	2	2	2	2	2	2	2	2	2	2	2	2	–

PART NUMBER			COLOUR	BODY TYPE																	
				54							65			66		71			78	
				A	B	C	D	H	E	G	B	D	H	A	B	A	B	D	A	B
– – 602A11 – – COVER ASSY. – SEAT BELT ADJUSTER																				
XA	54	602A11	A	Black	4	4	4	4	4	4	4	4	4	4	2	2	4	4	4	2	–
"B" type			B	Blue	4	4	4	4	4	4	4	4	4	4	2	2	4	4	4	2	–
			F	Saddle	4	4	4	4	4	4	4	4	4	4	2	2	4	4	4	2	–
			J	Burgundy	4	4	4	4	4	4	4	4	4	4	2	2	4	4	4	2	–
– – 60762 – – PANEL ASSY. – FRONT SEAT BACK																				
CH	54	60762	BA2A	Black to 5/73	–	–	–	2	2	2	2	2	2	2	–	–	–	–	2	–	–
			BA2B	Blue to 5/73	–	–	–	2	2	2	2	2	2	2	–	–	–	–	2	–	–
			BA1E	Parchment to 5/73	–	–	–	2	2	2	2	2	2	2	–	–	–	–	2	–	–
			BA2F	Saddle to 5/73	–	–	–	2	2	2	2	2	2	2	–	–	–	–	2	–	–
			BA2H	White to 5/73	–	–	–	2	2	2	2	2	2	2	–	–	–	–	2	–	–
			BA2J	Burgundy to 5/73	–	–	–	2	2	2	2	2	2	2	–	–	–	–	2	–	–
			BA2P	Dark Grey to 5/73	–	–	–	2	2	2	2	2	2	2	–	–	–	–	2	–	–
CH	54	60762	BA2A	Black	2	2	2	–	–	–	–	–	–	–	2	2	2	2	–	2	–
			BA2B	Blue	2	2	2	–	–	–	–	–	–	–	2	2	2	2	–	2	–
			BA1E	Parchment	–	2	2	–	–	–	–	–	–	–	–	2	–	2	–	–	–
			BA2F	Saddle	2	2	2	–	–	–	–	–	–	–	2	2	2	2	–	2	–
			BA2H	White	–	2	2	–	–	–	–	–	–	–	2	2	2	2	–	2	–
			BA2P	Dark Grey	2	2	2	–	–	–	–	–	–	–	2	2	2	2	–	2	–
375529 S2				Fastener	a/r	a/r	a/r	–	–	–	–	–	–	–	a/r	a/r	a/r	a/r	–	a/r	–
– – 610A75 – – COVER – SEAT BELT MOUNTING																				
XA	54	610A75	A	Black	a/r	a/r	a/r	a/r	a/r	a/r	a/r	a/r	a/r	a/r	a/r	a/r	a/r	a/r	a/r	a/r	–
"B" type			B	Blue	a/r	a/r	a/r	a/r	a/r	a/r	a/r	a/r	a/r	a/r	a/r	a/r	a/r	a/r	a/r	a/r	–
			F	Saddle	a/r	a/r	a/r	a/r	a/r	a/r	a/r	a/r	a/r	a/r	a/r	a/r	a/r	a/r	a/r	a/r	–
			J	Burgundy	a/r	a/r	a/r	a/r	a/r	a/r	a/r	a/r	a/r	a/r	a/r	a/r	a/r	a/r	a/r	a/r	–
– – 610B75 – – STOWAGE – SEAT BELT																				
XA	54	610B75	AA1A	Black	4	4	4	4	4	4	4	4	4	4	2	2	4	4	4	2	–
			AA1B	Blue	4	4	4	4	4	4	4	4	4	4	2	2	4	4	4	2	–
"B" type			AA1F	Saddle	4	4	4	4	4	4	4	4	4	4	2	2	4	4	4	2	–
			AA1J	Burgundy	4	4	4	4	4	4	4	4	4	4	2	2	4	4	4	2	–
– – 61172 – – BELT ASSY. – FRONT SEAT BENCH – LAP TYPE																				
XAA	54	61172	AB1A	Black	1	1	1	1	–	1	1	–	–	–	1	1	1	1	1	1	–
"A" type			AB1B	Blue	1	1	1	1	–	1	1	–	–	–	1	1	1	1	1	1	–
			AB1F	Saddle	1	1	1	1	–	1	1	–	–	–	1	1	1	1	1	1	–
			AB1J	Burgundy	1	1	1	1	–	1	1	–	–	–	1	1	1	1	1	1	–
XA	54	61172	AB1A	Black	1	1	1	1	–	1	1	–	–	–	1	1	1	1	1	1	–
			AB1B	Blue	1	1	1	1	–	1	1	–	–	–	1	1	1	1	1	1	–
"B" type – O.N.R.			AB1F	Saddle	1	1	1	1	–	1	1	–	–	–	1	1	1	1	1	1	–
			AB1J	Burgundy	–	–	–	1	–	1	–	–	–	–	–	–	–	–	1	–	–

PART NUMBER	COLOUR	BODY TYPE																	
		54							65			66		71			78		
		A	B	C	D	H	E	G	B	D	H	A	B	A	B	D	A	B
– – 61200 – – BELT ASSY. – REAR SEAT – LAP TYPE																			
XAA 54 600A46	AB1A Black	1	1	1	1	1	1	1	1	1	1	–	–	1	1	1	–	–
"A" type	AB1B Blue	1	1	1	1	1	1	1	1	1	–	–	–	1	1	1	–	–
	AB1F Saddle	1	1	1	1	1	1	1	1	1	1	–	–	1	1	1	–	–
	AB1J Burgundy	1	1	1	1	1	1	1	–	1	1	–	–	1	1	1	–	–
XA 54 600A46	AB1A Black	1	1	1	1	1	1	1	–	–	–	–	–	1	1	1	–	–
	AB1B Blue	1	1	1	1	1	1	1	–	–	–	–	–	1	1	1	–	–
"B" type	AB1F Saddle	1	1	1	1	1	1	1	–	–	–	–	–	1	1	1	–	–
	AB1J Burgundy	–	–	–	1	–	–	1	–	–	–	–	–	–	–	1	–	–
XA 65 600A46	AA1A Black	–	–	–	–	–	–	–	1	1	1	–	–	–	–	–	–	–
	AA1B Blue	–	–	–	–	–	–	–	1	1	1	–	–	–	–	–	–	–
"B" type	AA1F Saddle	–	–	–	–	–	–	–	1	1	1	–	–	–	–	–	–	–
	AA1J Burgundy	–	–	–	–	–	–	–	–	1	–	–	–	–	–	–	–	–
– – 61201 – – BELT ASSY. – FRONT SEAT BENCH – COMB TYPE																			
XAA 54 61201	AB1A Black	2	2	2	2	–	2	2	–	–	–	2	2	2	2	2	2	–
"A" type	AB1B Blue	2	2	2	2	–	2	2	–	–	–	2	2	2	2	2	2	–
	AB1F Saddle	2	2	2	2	–	2	2	–	–	–	2	2	2	2	2	2	–
	AB1J Burgundy	2	2	2	2	–	–	2	–	–	–	2	2	2	2	2	2	–
XA 54 61201	AB1A Black	2	2	2	2	–	2	2	–	–	–	2	2	2	2	2	2	–
	AB1B Blue	2	2	2	2	–	2	2	–	–	–	2	2	2	2	2	2	–
"B" type	AB1F Saddle	2	2	2	2	–	2	2	–	–	–	2	2	2	2	2	2	–
	AB1J Burgundy	–	–	–	2	–	–	2	–	–	–	–	–	–	–	2	–	–
XAA 54 61201	BB1A Black	2	2	2	2	–	2	2	–	–	–	2	2	2	2	2	2	–
"A" type	BB1B Blue	2	2	2	2	–	2	2	–	–	–	2	2	2	2	2	2	–
(With retractor)	BB1F Saddle	2	2	2	2	–	2	2	–	–	–	2	2	2	2	2	2	–
	BB1J Burgundy	2	2	2	2	–	–	2	–	–	–	2	2	2	2	2	2	–
XA 54 61201	BB1A Black	2	2	2	2	–	2	2	–	–	–	2	2	2	2	2	2	–
(With retractor)	BB1B Blue	2	2	2	2	–	2	2	–	–	–	2	2	2	2	2	2	–
"B" type	BB1F Saddle	2	2	2	2	–	2	2	–	–	–	2	2	2	2	2	2	–
	BB1J Burgundy	–	–	–	2	–	–	2	–	–	–	–	–	–	–	2	–	–
– – 61201 – – BELT ASSY. – REAR SEAT – COMB TYPE																			
XAA 54 613A77	AB1A Black	2	2	2	2	2	2	2	–	–	–	–	–	–	–	–	–	–
"A" type	AB1B Blue	2	2	2	2	2	2	2	–	–	–	–	–	–	–	–	–	–
	AB1F Saddle	2	2	2	2	2	2	2	–	–	–	–	–	–	–	–	–	–
	AB1J Burgundy	2	2	2	2	2	2	2	–	–	–	–	–	–	–	–	–	–
XA 54 613A77	AB1A Black	2	2	2	2	2	2	2	–	–	–	–	–	–	–	–	–	–
"B" type – O.N.R.	AB1B Blue	2	2	2	2	–	2	2	–	–	–	–	–	–	–	–	–	–
	AB1F Saddle	2	2	2	2	2	2	2	–	–	–	–	–	–	–	–	–	–
	AB1J Burgundy	–	–	–	2	–	–	2	–	–	–	–	–	–	–	–	–	–
XAA 65 613A77	AA1A Black	–	–	–	–	–	–	–	2	2	2	–	–	–	–	–	–	–
"A" type	AA1B Blue	–	–	–	–	–	–	–	2	2	2	–	–	–	–	–	–	–
	AA1F Saddle	–	–	–	–	–	–	–	2	2	2	–	–	–	–	–	–	–
	AA1J Burgundy	–	–	–	–	–	–	–	2	2	2	–	–	–	–	–	–	–
XA 65 613A77	AA1A Black	–	–	–	–	–	–	–	2	2	2	–	–	–	–	–	–	–
	AA1B Blue	–	–	–	–	–	–	–	2	2	–	–	–	–	–	–	–	–
"B" type	AA1F Saddle	–	–	–	–	–	–	–	2	2	2	–	–	–	–	–	–	–
	AA1J Burgundy	–	–	–	–	–	–	–	–	2	–	–	–	–	–	–	–	–
XAA 71 613A77	AB1A Black	–	–	–	–	–	–	–	–	–	–	–	–	2	2	2	–	–
"A" type	AB1B Blue	–	–	–	–	–	–	–	–	–	–	–	–	2	2	2	–	–
	AB1F Saddle	–	–	–	–	–	–	–	–	–	–	–	–	2	2	2	–	–
	AB1J Burgundy	–	–	–	–	–	–	–	–	–	–	–	–	2	2	2	–	–

PART NUMBER		COLOUR	BODY TYPE																	
			54							65			66		71			78	
			A	B	C	D	H	E	G	B	D	H	A	B	A	B	D	A	B
– – 61201 – – BELT ASSY. – REAR SEAT – COMB TYPE (Continued)																			
XA 71 613A77	AB1A	Black	–	–	–	–	–	–	–	–	–	–	–	–	2	2	2	–	–
	AB1B	Blue	–	–	–	–	–	–	–	–	–	–	–	–	2	2	2	–	–
"B" type – O.N.R.	AB1F	Saddle	–	–	–	–	–	–	–	–	–	–	–	–	2	2	2	–	–
	AB1J	Burgundy	–	–	–	–	–	–	–	–	–	–	–	–	–	2	–	–	–
– – 61201/2 – – BELT ASSY. – FRONT SEAT BUCKET – COMB TYPE																			
NOTE: When ordering basic No.		61201 R.H.																	
		61202 L.H.																	
XAA 54 61201	CB1A	Black	1	1	1	1	1	1	1	–	–	–	1	1	1	1	1	1	–
"A.. type	CB1B	Blue	1	1	1	1	1	1	1	–	–	–	1	1	1	1	1	1	–
	CB1F	Saddle	1	1	1	1	1	1	1	–	–	–	1	1	1	1	1	1	–
	CB1J	Burgundy	1	1	1	1	1	1	1	–	–	–	1	1	1	1	1	1	–
XA 54 61201	CB1A	Black	1	1	1	1	1	1	1	–	–	–	1	1	1	1	1	1	–
	CB1B	Blue	1	1	1	1	1	1	1	–	–	–	1	1	1	1	1	1	–
"B" type CB1F	CB1F	Saddle	1	1	1	1	1	1	1	–	–	–	1	1	1	1	1	1	–
	CB1J	Burgundy	1	1	1	1	1	1	1	–	–	–	1	1	1	1	1	1	–
XAA 54 61201	DB1A	Black	1	1	1	1	1	1	1	–	–	–	1	1	1	1	1	1	–
"A" type	DB1B	Blue	1	1	1	1	1	1	1	–	–	–	1	1	1	1	1	1	–
With retractors	DB1F	Saddle	1	1	1	1	1	1	1	–	–	–	1	1	1	1	1	1	–
	DB1J	Burgundy	1	1	1	1	1	1	1	–	–	–	1	1	1	1	1	1	–
XA 54 61201	DB1A	Black	1	1	1	1	1	1	1	–	–	–	–	–	1	1	1	–	–
With retractor	DB1B	Blue	1	1	1	1	–	1	1	–	–	–	1	1	1	1	1	1	–
	DB1F	Saddle	1	1	1	1	1	1	1	–	–	–	–	–	1	1	1	–	–
"B" type	DB1J	Burgundy	–	–	–	1	–	–	1	–	–	–	–	–	–	–	1	–	–
XAA 65 61201	AA1A	Black	–	–	–	–	–	–	–	1	1	1	–	–	–	–	–	–	–
"A" type	AA1B	Blue	–	–	–	–	–	–	–	1	1	1	–	–	–	–	–	–	–
	AA1F	Saddle	–	–	–	–	–	–	–	1	1	1	–	–	–	–	–	–	–
	AA1J	Burgundy	–	–	–	–	–	–	–	1	1	1	–	–	–	–	–	–	–
XA 65 61201	AA1A	Black	–	–	–	–	–	–	–	1	1	1	–	–	–	–	–	–	–
	AA1B	Blue	–	–	–	–	–	–	–	1	1	–	–	–	–	–	–	–	–
"B" type	AA1F	Saddle	–	–	–	–	–	–	–	1	1	1	–	–	–	–	–	–	–
	AA1J	Burgundy	–	–	–	–	–	–	–	–	1	–	–	–	–	–	–	–	–
XAA 65 61201	BA1A	Black	–	–	–	–	–	–	–	1	1	1	–	–	–	–	–	–	–
"A" type	BA1B	Blue	–	–	–	–	–	–	–	1	1	1	–	–	–	–	–	–	–
With retractor	BA1F	Saddle	–	–	–	–	–	–	–	1	1	1	–	–	–	–	–	–	–
	BA1J	Burgundy	–	–	–	–	–	–	–	1	1	1	–	–	–	–	–	–	–
XA 65 61201	BA1A	Black	–	–	–	–	–	–	–	1	1	1	–	–	–	–	–	–	–
With retractor																			
"B" type																			
V 387870 S8		Bolt	2	2	2	2	2	2	2	–	–	–	2	2	2	2	2	2	–
AR 387329 S8		Washer-wave	a/r	a/r	a/r	a/r	a/r	a/r	a/r	a/r	a/r	a/r	a/r	a/r	a/r	a/r	a/r	a/r	–
AR 387332 S8		Washer-flat	2	2	2	2	2	2	2	2	2	2	2	2	2	2	2	2	–
– – 613A77 – – BELT ASSY. – REAR SEAT – COMB TYPE (REFER 61201)																			
– – 62186 – – SHIELD – FRONT BUCKET SEAT CUSHION – SIDE																			
(Not Serviced Dealer to Fabricate)																			
XA 54 62186	AA1A	Black–Outer–																	
		O.N.R.	2	2	2	–	–	2	–	–	–	–	2	2	2	2	–	2	–
	AA1B	Blue–Outer–																	
		O.N.R.	2	2	2	–	–	2	–	–	–	–	2	–	2	2	–	2	–
	AA1E	Parchment–																	
		Outer–O.N.R.	–	2	2	–	–	2	–	–	–	–	–	2	–	2	–	–	–

	PART NUMBER		COLOUR	BODY TYPE																	
				54							65			66		71			78	
				A	B	C	D	H	E	G	B	D	H	A	B	A	B	D	A	B
-- 62186 -- SHIELD – FRONT BUCKET SEAT CUSHION – SIDE (Continued)																				
		AA1F	Saddle–Outer–O.N.R.	2	2	2	–	–	2	–	–	–	–	2	–	2	2	–	2	–
		AA1H	White–Outer–O.N.R.	–	2	2	–	–	2	–	–	–	–	–	2	–	2	–	–	–
XA	54 62186	AA2A	Black–Outer–O.N.R.	–	–	–	2	2	–	2	–	–	–	–	–	–	–	2	–	–
		AA2B	Blue–Outer–O.N.R.	–	–	–	2	2	–	2	–	–	–	–	–	–	–	2	–	–
		AA2E	Parchment–Outer–O.N.R.	–	–	–	2	2	–	2	–	–	–	–	–	–	–	2	–	–
		AA2F	Saddle–Outer–O.N.R.	–	–	–	2	2	–	2	–	–	–	–	–	–	–	2	–	–
		AA2H	White–Outer–O.N.R.	–	–	–	2	2	–	2	–	–	–	–	–	–	–	2	–	–
		AA2J	Burgundy–Outer–O.N.R.	–	–	–	2	2	–	2	–	–	–	–	–	–	–	2	–	–
XA	65 62186	AA1A	Black–Outer–O.N.R.	–	–	–	–	–	–	–	2	–	–	–	–	–	–	–	–	–
		AA1A	Black–Inner R.H. – O.N.R.	–	–	–	–	–	–	–	1	–	–	–	–	–	–	–	–	–
		AA1B	Blue–Outer–O.N.R.	–	–	–	–	–	–	–	2	–	–	–	–	–	–	–	–	–
		AA1B	Blue–Inner R.H. –O.N.R.	–	–	–	–	–	–	–	1	–	–	–	–	–	–	–	–	–
		AA1E	Parchment–Outer –O.N.R.	–	–	–	–	–	–	–	2	–	–	–	–	–	–	–	–	–
		AA1E	Parchment–Inner R.H.–O.N.R.	–	–	–	–	–	–	–	1	–	–	–	–	–	–	–	–	–
		AA1F	Saddle–Outer–O.N.R.	–	–	–	–	–	–	–	2	–	–	–	–	–	–	–	–	–
		AA1F	Saddle–Inner R.H. –O.N.R.	–	–	–	–	–	–	–	1	–	–	–	–	–	–	–	–	–
		AA1H	White–Outer–O.N.R.	–	–	–	–	–	–	–	2	–	–	–	–	–	–	–	–	–
		AA1H	White–Inner R.H. –O.N.R.	–	–	–	–	–	–	–	1	–	–	–	–	–	–	–	–	–
XA	65 62186	AA2A	Black–Outer–O.N.R.	–	–	–	–	–	–	–	–	2	2	–	–	–	–	–	–	–
		AA2B	Blue–Outer–O.N.R.	–	–	–	–	–	–	–	–	2	–	–	–	–	–	–	–	–
		AA2F	Saddle–Outer–O.N.R.	–	–	–	–	–	–	–	–	2	2	–	–	–	–	–	–	–
		AA2H	White–Outer–O.N.R.	–	–	–	–	–	–	–	–	2	2	–	–	–	–	–	–	–
XA	65 62186	BA1A	Black–Inner L.H. –O.N.R.	–	–	–	–	–	–	–	1	–	–	–	–	–	–	–	–	–
		BA1B	Blue–Inner L.H. –O.N.R.	–	–	–	–	–	–	–	1	–	–	–	–	–	–	–	–	–
		BA1E	Parchment–Inner L.H.–O.N.R.	–	–	–	–	–	–	–	1	–	–	–	–	–	–	–	–	–
		BA1F	Saddle–Inner L.H.–O.N.R.	–	–	–	–	–	–	–	1	–	–	–	–	–	–	–	–	–
		BA1H	White–Inner L.H.–O.N.R.	–	–	–	–	–	–	–	1	–	–	–	–	–	–	–	–	–

PART NUMBER				COLOUR	BODY TYPE																	
					54							65			66		71			78	
					A	B	C	D	H	E	G	B	D	H	A	B	A	B	D	A	B
– – 62866 – – RECEPTACLE ASSY. & RETAINER – ASH																					
XA	54	62866	AA1A	Black	1	1	1	1	–	1	1	–	–	–	–	–	1	1	1	–	–
			AA1B	Blue–O.N.R.	1	1	1	1	–	1	1	–	–	–	–	–	1	1	1	–	–
			AA1E	Parchment–O.N.R.	–	1	1	1	–	1	1	–	–	–	–	–	–	1	1	–	–
			AA1F	Saddle	1	1	1	1	–	1	1	–	–	–	–	–	1	1	1	–	–
			AA1H	White	–	1	1	1	–	–	1	–	–	–	–	–	–	1	1	–	–
			AA1J	Burgundy	–	–	–	1	–	–	1	–	–	–	–	–	–	–	1	–	–
– – 62900/1 – – COVER ASSY. – FRONT SEAT CUSHION																					
Refer Soft Trim Seat Catalogue – Cat. 133																					
– – 629A06 – – COVER – BUCKET FRONT SEAT BRACKET SIDE INNER																					
XA	65	629A06	AA1A	Black	2	2	2	2	2	2	2	2	2	2	2	2	2	2	2	2	–
(Vinyl)			AA1B	Blue	2	2	2	2	2	2	2	2	2	2	2	2	2	2	2	2	–
			AA1E	Parchment	2	2	2	2	2	2	2	2	2	2	2	2	2	2	2	2	–
			AA1F	Saddle	2	2	2	2	2	2	2	2	2	2	2	2	2	2	2	2	–
			AA1H	White	2	2	2	2	2	2	2	2	2	2	2	2	2	2	2	2	–
			AA1J	Burgundy	2	2	2	2	2	2	2	2	2	2	2	2	2	2	2	2	–
XA	65	629A06	AA2A	Black	2	2	2	2	2	2	2	2	2	2	2	2	2	2	2	2	–
(Vinyl & cloth)			AA2B	Blue	2	2	2	2	2	2	2	2	2	2	2	2	2	2	2	2	–
			AA2F	Saddle	2	2	2	2	2	2	2	2	2	2	2	2	2	2	2	2	–
			AA2H	White	2	2	2	2	2	2	2	2	2	2	2	2	2	2	2	2	–
			AA1P	Dark Grey	2	2	2	2	2	2	2	2	2	2	2	2	2	2	2	2	–
– – 63804 – – COVER ASSY. – REAR SEAT CUSHION																					
Refer Soft Trim Seat Catalogue – Cat. 133																					
– – 64416/7 – – COVER ASSY. – FRONT SEAT BACK																					
Refer Soft Trim Seat Catalogue – Cat. 133																					
– – 644A18 – – COVER ASSY. – CENTRE ARM REST – FRONT & REAR SEAT																					
XA	54	644A18	AA1A	Black	–	–	2	–	2	–	–	–	–	–	–	–	–	–	–	–	–
(Kiwi)			AA1B	Blue	–	–	2	–	–	–	–	–	–	–	–	–	–	–	–	–	–
			AA1F	Saddle	–	–	2	–	–	–	–	–	–	–	–	–	–	–	–	–	–
			AA1H	White	–	–	2	–	–	–	–	–	–	–	–	–	–	–	–	–	–
XA	54	644A18	AA1E	Parchment	–	–	2	2	2	–	–	–	–	–	–	–	–	–	–	–	–
(Valino)																					
– – 644A18 – – COVER ASSY. – CENTRE ARM REST – REAR SEAT																					
XA	54	644A18	AA2A	Black	–	–	–	1	1	–	–	–	–	–	–	–	–	–	–	–	–
(Valino)			AA2B	Blue	–	–	–	1	–	–	–	–	–	–	–	–	–	–	–	–	–
			AA2F	Saddle	–	–	–	1	1	–	–	–	–	–	–	–	–	–	–	–	–
			AA2H	White	–	–	–	1	1	–	–	–	–	–	–	–	–	–	–	–	–
			AA1J	Burgundy	–	–	–	1	–	–	–	–	–	–	–	–	–	–	–	–	–
– – 644A25 – – BUTTON ASSY. – DOOR TRIM																					
XA	54	644A25	AA1A	Black	–	–	16	–	–	16	–	–	–	–	–	–	–	–	–	–	–
(Kiwi)			AA1B	Blue	–	–	16	–	–	16	–	–	–	–	–	–	–	–	–	–	–
			AA1E	Parchment	–	–	16	–	–	16	–	–	–	–	–	–	–	–	–	–	–
			AA1F	Saddle	–	–	16	–	–	16	–	–	–	–	–	–	–	–	–	–	–
			AA1H	White	–	–	16	–	–	16	–	–	–	–	–	–	–	–	–	–	–

PART NUMBER				COLOUR	BODY TYPE																	
					54							65			66		71			78	
					A	B	C	D	H	E	G	B	D	H	A	B	A	B	D	A	B
– – 644A25 – – BUTTON ASSY. – DOOR TRIM (Continued)																					
XA	54	644A25	B2A	Black	–	–	24	–	–	24	–	–	–	–	–	–	–	–	–	–	–
			B3B	Blue	–	–	24	–	–	24	–	–	–	–	–	–	–	–	–	–	–
			B1E	Parchment	–	–	–	–	–	24	–	–	–	–	–	–	–	–	–	–	–
			B4F	Saddle	–	–	24	–	–	24	–	–	–	–	–	–	–	–	–	–	–
			B1H	White	–	–	24	–	–	24	–	–	–	–	–	–	–	–	–	–	–
– – 644A25 – – BUTTON ASSY. – SEAT TRIM																					
ZF	54	644A25	AA1A	Black	–	–	6	–	–	6	–	6	–	–	–	–	–	–	–	–	–
(Crinkle)			AA1B	Blue	–	–	6	–	–	6	–	6	–	–	–	–	–	–	–	–	–
			AA1E	Parchment	–	–	6	–	–	6	–	6	–	–	–	–	–	–	–	–	–
			AA1F	Saddle	–	–	6	–	–	6	–	6	–	–	–	–	–	–	–	–	–
			AA1H	White	–	–	6	–	–	6	–	6	–	–	–	–	–	–	–	–	–
ZF	54	644A25	B2A	Black	–	–	24	–	–	24	–	–	–	–	–	–	–	–	–	–	–
(Crinkle)			B3B	Blue	–	–	24	–	–	24	–	–	–	–	–	–	–	–	–	–	–
			B1E	Parchment	–	–	–	–	–	24	–	–	–	–	–	–	–	–	–	–	–
			B4F	Saddle	–	–	24	–	–	24	–	–	–	–	–	–	–	–	–	–	–
			B1H	White	–	–	24	–	–	24	–	–	–	–	–	–	–	–	–	–	–
– – 66600 – – COVER ASSY. – REAR SEAT																					
Refer Soft Trim Seat Catalogue – Cat. 133																					
– – 67086 – – ARM REST – REAR SEAT BACK – CENTRE																					
XA	54	67086	AA1A	Black	–	–	1	–	–	–	–	–	–	–	–	–	–	–	–	–	–
			AA1B	Blue	–	–	1	–	–	–	–	–	–	–	–	–	–	–	–	–	–
			AA1E	Parchment	–	–	1	–	–	–	–	–	–	–	–	–	–	–	–	–	–
			AA1F	Saddle	–	–	1	–	–	–	–	–	–	–	–	–	–	–	–	–	–
			AA1H	White	–	–	1	–	–	–	–	–	–	–	–	–	–	–	–	–	–
XA	54	67086	AA2A	Black	–	–	–	1	1	–	–	–	–	–	–	–	–	–	–	–	–
			AA2B	Blue	–	–	–	1	–	–	–	–	–	–	–	–	–	–	–	–	–
			AA2E	Parchment	–	–	–	1	1	–	–	–	–	–	–	–	–	–	–	–	–
			AA2F	Saddle	–	–	–	1	1	–	–	–	–	–	–	–	–	–	–	–	–
			AA2H	White	–	–	–	1	1	–	–	–	–	–	–	–	–	–	–	–	–
			AA1J	Burgundy	–	–	–	1	–	–	–	–	–	–	–	–	–	–	–	–	–
XA	65	67086	AA1A	Black	–	–	–	–	–	–	–	–	1	1	–	–	–	–	–	–	–
			AA1B	Blue	–	–	–	–	–	–	–	–	1	–	–	–	–	–	–	–	–
			AA1E	Parchment	–	–	–	–	–	–	–	–	1	1	–	–	–	–	–	–	–
			AA1F	Saddle	–	–	–	–	–	–	–	–	1	1	–	–	–	–	–	–	–
			AA1H	White	–	–	–	–	–	–	–	–	1	1	–	–	–	–	–	–	–
			AA1J	Burgundy	–	–	–	–	–	–	–	–	1	–	–	–	–	–	–	–	–
ZF	54	67086	AA1A	Black	–	–	–	–	–	1	–	–	–	–	–	–	–	–	–	–	–
			AA1B	Blue	–	–	–	–	–	1	–	–	–	–	–	–	–	–	–	–	–
			AA1E	Parchment	–	–	–	–	–	1	–	–	–	–	–	–	–	–	–	–	–
			AA1F	Saddle	–	–	–	–	–	1	–	–	–	–	–	–	–	–	–	–	–
			AA1H	White	–	–	–	–	–	1	–	–	–	–	–	–	–	–	–	–	–
ZF	54	67086	BA1A	Black	–	–	–	–	–	–	1	–	–	–	–	–	–	–	–	–	–
			BA1B	Blue	–	–	–	–	–	–	1	–	–	–	–	–	–	–	–	–	–
			BA1E	Parchment	–	–	–	–	–	–	1	–	–	–	–	–	–	–	–	–	–
			BA1F	Saddle	–	–	–	–	–	–	1	–	–	–	–	–	–	–	–	–	–
			BA1H	White	–	–	–	–	–	–	1	–	–	–	–	–	–	–	–	–	–
			BA1J	Burgundy	–	–	–	–	–	–	1	–	–	–	–	–	–	–	–	–	–

PART NUMBER			COLOUR	BODY TYPE																	
				54							65			66		71			78	
				A	B	C	D	H	E	G	B	D	H	A	B	A	B	D	A	B
– – 672A44 – – COVER ASSY. – CENTRE ARM REST																				
XA	54	672A44	AA1A	Black–Front	–	–	1	1	–	1	1	–	–	–	–	–	–	–	1	–	–
(Kiwi)			AA1B	Blue–Front	–	–	1	1	–	1	1	–	–	–	–	–	–	–	1	–	–
			AA1E	Parchment–Front	–	–	1	1	–	1	1	–	–	–	–	–	–	–	1	–	–
			AA1F	Saddle–Front	–	–	1	1	–	1	1	–	–	–	–	–	–	–	1	–	–
			AA1H	White–Front	–	–	1	1	–	1	1	–	–	–	–	–	–	–	1	–	–
			AA1J	Burgundy–Front	–	–	–	1	–	–	–	–	–	–	–	–	–	–	1	–	–
XA	54	672A44	AA2A	Black–Front	–	–	1	–	–	–	1	–	–	–	–	–	–	–	–	–	–
(Valino)			AA2B	Blue–Front	–	–	1	–	–	–	1	–	–	–	–	–	–	–	–	–	–
			AA2E	Parchment–Front	–	–	1	–	–	–	1	–	–	–	–	–	–	–	–	–	–
			AA2F	Saddle–Front	–	–	1	–	–	–	1	–	–	–	–	–	–	–	–	–	–
			AA2H	White–Front	–	–	1	–	–	–	1	–	–	–	–	–	–	–	–	–	–
			AA2J	Burgundy–Front	–	–	1	–	–	–	1	–	–	–	–	–	–	–	–	–	–
ZF	54	672A44	AA1A	Black–Rear	–	–	–	–	–	1	–	–	–	–	–	–	–	–	–	–	–
			AA1B	Blue–Rear	–	–	–	–	–	1	–	–	–	–	–	–	–	–	–	–	–
			AA1F	Saddle–Rear	–	–	–	–	–	1	–	–	–	–	–	–	–	–	–	–	–
			AA1H	White–Rear	–	–	–	–	–	1	–	–	–	–	–	–	–	–	–	–	–
ZF	54	672A44	BA1A	Black–Rear	–	–	–	–	–	–	1	–	–	–	–	–	–	–	–	–	–
			BA1B	Blue–Rear	–	–	–	–	–	–	1	–	–	–	–	–	–	–	–	–	–
			BA1E	Parchment–Rear	–	–	–	–	–	–	1	–	–	–	–	–	–	–	–	–	–
			BA1F	Saddle–Rear	–	–	–	–	–	–	1	–	–	–	–	–	–	–	–	–	–
			BA1H	White–Rear	–	–	–	–	–	–	1	–	–	–	–	–	–	–	–	–	–
			BA1J	Burgundy–Rear	–	–	–	–	–	–	1	–	–	–	–	–	–	–	–	–	–
XA	65	672A44	AA1A	Black–Rear	–	–	–	–	–	–	–	1	1	–	–	–	–	–	–	–	–
			AA1B	Blue–Rear	–	–	–	–	–	–	–	1	–	–	–	–	–	–	–	–	–
			AA1E	Parchment–Rear	–	–	–	–	–	–	–	1	1	–	–	–	–	–	–	–	–
			AA1F	Saddle–Rear	–	–	–	–	–	–	–	1	1	–	–	–	–	–	–	–	–
			AA1H	White–Rear	–	–	–	–	–	–	–	1	1	–	–	–	–	–	–	–	–
			AA1J	Burgundy–Rear	–	–	–	–	–	–	–	1	–	–	–	–	–	–	–	–	–
– – 67260 – – ARM REST – FRONT SEAT BACK CENTRE																				
XA	54	67260	AB1A	Black	–	–	1	–	–	1	–	–	–	–	–	–	–	–	–	–	–
			AB1B	Blue	–	–	1	–	–	1	–	–	–	–	–	–	–	–	–	–	–
			AB1E	Parchment	–	–	1	–	–	1	–	–	–	–	–	–	–	–	–	–	–
			AB1F	Saddle	–	–	1	–	–	1	–	–	–	–	–	–	–	–	–	–	–
			AB1H	White	–	–	1	–	–	1	–	–	–	–	–	–	–	–	–	–	–
XAA	54	67260	AA1A	Black	–	–	–	1	–	–	1	–	–	–	–	–	–	–	–	–	–
			AA1B	Blue	–	–	–	1	–	–	1	–	–	–	–	–	–	–	–	–	–
			AA1E	Parchment	–	–	–	1	–	–	1	–	–	–	–	–	–	–	–	–	–
			AA1F	Saddle	–	–	–	1	–	–	1	–	–	–	–	–	–	–	–	–	–
			AA1H	White	–	–	–	1	–	–	1	–	–	–	–	–	–	–	–	–	–
			AA1J	Burgundy	–	–	–	1	–	–	1	–	–	–	–	–	–	–	–	–	–
50148 S8				Screw	–	–	4	–	–	–	–	–	–	–	–	–	–	–	–	–	–

– – TRIM MATERIAL

Refer Soft Trim Seat Catalogue

– – SEAT INSERT

Refer Soft Trim Seat Catalogue – Cat. 133

– – SEAT FACING

Refer Soft Trim Seat Catalogue – Cat. 133

– – SEAT SURROUND

Refer Soft Trim Seat Catalogue – Cat. 133

PART NUMBER				COLOUR	BODY TYPE																	
					54							65			66		71			78	
					A	B	C	D	H	E	G	B	D	H	A	B	A	B	D	A	B
XB/ZG																						
-- 02344/5 -- PANEL -- COWL SIDE TRIM																						
XA	54	02344	AC1A	Black	1	1	1	1	1	1	1	1	1	1	1	1	1	1	1	1	1
			AC1V	Dark Brown	1	1	1	1	1	1	1	1	1	1	1	1	1	1	1	1	1
XA	54	02344	A1RZ	Bronze Green	–	–	–	–	–	–	–	–	–	–	1	–	–	–	–	–	–
(Army O.S.O.-F-6010)																						
-- 02606 -- WINDLACE -- DOOR OPENING -- LONG																						
XA	65	02606	AA1A	Black	–	–	–	–	–	–	–	2	2	2	–	–	–	–	–	–	–
			AB2E	Parchment	–	–	–	–	–	–	–	–	–	2	–	–	–	–	–	–	–
			AB2F	Saddle	–	–	–	–	–	–	–	–	–	2	–	–	–	–	–	–	–
			AA1H	White	–	–	–	–	–	–	–	–	–	2	–	–	–	–	–	–	–
			AB1Q	Chamois	–	–	–	–	–	–	–	–	–	2	–	–	–	–	–	–	–
			AB1V	Dark Brown	–	–	–	–	–	–	–	2	2	–	–	–	–	–	–	–	–
			AB2V	Brown	–	–	–	–	–	–	–	–	–	2	–	–	–	–	–	–	–
XA	66	02606	AA1A	Black	–	–	–	–	–	–	–	–	–	–	2	2	–	–	–	2	2
			AB1V	Dark Brown	–	–	–	–	–	–	–	–	–	–	2	2	–	–	–	2	2
XA	66	02606	A1RZ	Bronze Green	–	–	–	–	–	–	–	–	–	–	2	–	–	–	–	–	–
(Army O.S.O.-F-6010)																						
-- 02606 -- WINDLACE -- DOOR OPENING -- SHORT																						
XA	65	02606	BW1A	Black	–	–	–	–	–	–	–	2	2	2	–	–	–	–	–	–	–
			BB2E	Parchment	–	–	–	–	–	–	–	–	–	2	–	–	–	–	–	–	–
			BB2F	Saddle	–	–	–	–	–	–	–	–	–	2	–	–	–	–	–	–	–
			BW1H	White	–	–	–	–	–	–	–	–	–	2	–	–	–	–	–	–	–
			BB1Q	Chamois	–	–	–	–	–	–	–	–	–	2	–	–	–	–	–	–	–
			BB1V	Dark Brown	–	–	–	–	–	–	–	2	2	–	–	–	–	–	–	–	–
			BB2V	Brown	–	–	–	–	–	–	–	–	–	2	–	–	–	–	–	–	–
-- 03542 -- MOULDING -- WINDSHIELD HEADER -- INSIDE																						
PL	54	03542	AA1P	Light Grey	1	1	1	1	1	1	1	–	–	–	1	1	1	1	1	1	1
PL	65	03542	AA1P	Light Grey	–	–	–	–	–	–	–	1	1	1	–	–	–	–	–	–	–
-- 04104 -- VISOR -- INSIDE LESS ARM & BRACKET																						
XA	54	04104	AD1P	Light Grey	2	2	2	2	2	2	2	2	2	2	2	2	2	2	2	2	2
XA	54	04104	AD3E	Parchment	–	2	2	2	–	2	2	–	–	–	–	–	–	–	–	–	–
-- 04282 -- PAD AND RETAINER ASSY. -- INSTRUMENT PANEL																						
XA	54	04282	AD1A	Black	1	1	1	1	1	1	1	1	1	1	1	1	1	1	1	1	1
			AD1V	Dark Brown	1	1	1	1	1	1	1	1	1	1	1	1	1	1	1	1	1
-- 042B85 -- PAD -- TRANSIEVE -- TAXI																						
XA	54	042B85	AA1A	Black	1	1	1	–	–	1	1	–	–	–	1	1	–	–	–	1	1
			AA1V	Dark Brown	1	1	1	–	–	1	1	–	–	–	1	1	–	–	–	1	1
-- 042B85 -- PAD -- SPEEDOMETER -- POLICE																						
V72DA	54	042B85	AWA	Black	–	1	–	–	–	–	–	–	–	–	–	–	–	–	–	–	–
-- 04291 -- TRIM COVER -- INSTRUMENT PANEL																						
XA	54	04291	AB1A	Black	–	–	–	1	1	–	1	–	1	1	–	–	–	–	–	1	–
			AB1V	Dark Brown	–	–	–	1	1	–	1	–	1	1	–	–	–	–	–	1	–

PART NUMBER				COLOUR	BODY TYPE																
					54							65			66		71			78	
					A	B	C	D	H	E	G	B	D	H	A	B	A	B	D	A	B
– – 04480 – – PANEL ASSY. – INSTRUMENT PANEL END																					
XA	54	04480	AA1A	Black	1	1	1	1	1	1	1	1	1	1	1	1	1	1	1	1	1
			AA1V	Dark Brown	1	1	1	1	1	1	1	1	1	1	1	1	1	1	1	1	1
– – 044B86 – – TRIM COVER – INSTRUMENT PANEL CENTRE – WITHOUT AIR COND.																					
XA	54	044B86	AB1A	Black	–	–	–	1	1	1	1	–	1	1	–	–	–	–	1	–	–
			AB1V	Dark Brown	–	–	–	1	1	1	1	–	1	1	–	–	–	–	1	–	–
– – 044B86 – – TRIM COVER – INSTRUMENT PANEL CENTRE – WITH AIR COND.																					
XA	54	044B86	BB1A	Black	–	–	–	1	1	1	1	–	1	1	–	–	–	–	1	–	–
			BB1V	Dark Brown	–	–	–	1	1	1	1	–	1	1	–	–	–	–	1	–	–
– – 045A05 – – CONSOLE & ARMREST ASSY. – WITH COLUMN SHIFT																					
XA	54	045A05	AF2A	Black	1	1	1	1	–	1	1	–	1	–	1	1	1	1	1	1	1
			AF2E	Parchment	–	1	1	1	–	1	1	–	1	–	–	1	–	1	1	–	1
			AF3F	Saddle	1	1	1	1	–	1	1	–	1	–	1	1	1	1	1	1	1
			AF2H	White	–	1	1	1	–	1	1	–	1	–	–	1	–	1	1	–	1
			AF1Q	Chamois	–	1	1	1	–	1	1	–	1	–	–	1	–	1	1	–	1
			AF1V	Brown	–	–	–	1	–	–	1	–	1	–	–	–	–	–	1	–	–
– – 045A06 – – CONSOLE & ARMREST ASSY. – WITH FLOOR SHIFT																					
XA	54	045A06	BC1A	Black	1	1	1	1	1	1	1	1	1	1	1	1	1	1	1	1	1
(Auto. trans.)			BC2F	Saddle	1	1	1	1	1	1	1	1	1	1	1	1	1	1	1	1	1
			BC1V	Brown	1	1	1	1	1	1	1	1	1	1	1	1	1	1	1	1	1
XA	54	045A06	CB1A	Black	1	1	1	1	1	1	1	1	1	1	1	1	1	1	1	1	1
(Man. trans.)			CB1V	Dark Brown	1	1	1	1	1	1	1	1	1	1	1	1	1	1	1	1	1
– – 045A10 – – ARMREST ASSY. – CONSOLE – WITH COLUMN SHIFT																					
XA	54	045A10	AE2A	Black	1	1	1	1	–	1	1	–	1	–	1	1	1	1	1	1	1
			AE2E	Parchment	–	1	1	1	–	1	1	–	1	–	–	1	–	1	1	–	1
			AE3F	Saddle	1	1	1	1	–	1	1	–	1	–	1	1	1	1	1	1	1
			AE2H	White	–	1	1	1	–	1	1	–	1	–	–	1	–	1	1	–	1
			AE1Q	Chamois	–	1	1	1	–	1	1	–	1	–	–	1	–	1	1	–	1
			AE1V	Brown	–	–	–	–	–	1	1	–	1	–	–	–	–	–	1	–	–
– – 045A16/7 – – COVER – ARMREST HINGE CONSOLE – WITH COLUMN SHIFT																					
NOTE: When ordering basic No. 045A16 – R.H.																					
045A17 – L.H.																					
XA	54	045A16	AC1A	Black	–	–	–	1	–	1	1	–	1	–	–	–	–	–	1	–	–
			AC3E	Parchment	–	–	–	1	–	1	1	–	1	–	–	–	–	–	1	–	–
			AC2F	Saddle	–	–	–	1	–	1	1	–	1	–	–	–	–	–	1	–	–
			AC1H	White	–	–	–	1	–	1	1	–	1	–	–	–	–	–	1	–	–
			AC1Q	Chamois	–	–	–	1	–	1	1	–	1	–	–	–	–	–	1	–	–
			AC1V	Brown	–	–	–	1	–	–	1	–	1	–	–	–	–	–	1	–	–
– – 045A22 – – COVER ASSY. – ARMREST CONSOLE – WITH COLUMN SHIFT																					
XA	54	045A22	AB2A	Black	1	1	1	1	–	1	1	–	1	–	1	1	1	1	1	1	1
			AB2E	Parchment	–	1	1	1	–	1	1	–	1	–	–	1	–	1	1	–	1
			AB3F	Saddle	1	1	1	1	–	1	1	–	1	–	1	1	1	1	1	1	1
			AB3H	White	–	1	1	1	–	1	1	–	1	–	–	1	–	1	1	–	1
			AB1Q	Chamois	–	1	1	1	–	1	1	–	1	–	–	1	–	1	1	–	1
			AB1V	Brown	–	–	–	1	–	–	1	–	1	–	–	–	–	–	1	–	–

PART NUMBER	COLOUR	BODY TYPE																	
		54							65			66		71			78		
		A	B	C	D	H	E	G	B	D	H	A	B	A	B	D	A	B	
-- 045A23 -- COVER ASSY. -- CONSOLE -- WITH COLUMN SHIFT																			
XA 54 045A23 AB2A	Black	1	1	1	1	–	1	1	–	1	–	1	1	1	1	1	1	1	
AB2E	Parchment	–	1	1	1	–	1	1	–	1	–	–	1	–	1	1	–	1	
AB3F	Saddle	1	1	1	1	–	1	1	–	1	–	1	1	1	1	1	1	1	
AB3H	White	–	1	1	1	–	1	1	–	1	–	–	1	–	1	1	–	1	
AB1Q	Chamois	–	1	1	1	–	1	1	–	1	–	–	1	–	1	1	–	1	
AB1V	Brown	–	–	–	1	–	–	1	–	1	–	–	–	–	–	1	–	–	
-- 045A26 -- SPACER -- CONSOLE ARMREST -- (PAINT TO SUIT)																			
XA 54 045A26 AB2F	Black	–	–	–	1	–	1	1	–	1	–	–	–	–	–	1	–	–	
-- 060A70 -- DOOR ASSY. -- CONSOLE GLOVE BOX COMPARTMENT -- FLOOR SHIFT ONLY -- (BUCKET SEATS WITH SPORTS CONSOLE)																			
XA 54 060A70 BC1A	Black	1	1	1	1	1	1	1	1	1	1	1	1	1	1	1	1	1	
BC2F	Saddle	1	1	1	1	1	1	1	1	1	1	1	1	1	1	1	1	1	
BC1V	Brown	1	1	1	1	1	1	1	1	1	1	1	1	1	1	1	1	1	
-- 06126 -- TRIM COVER -- GLOVE COMPARTMENT DOOR																			
XA 54 06126 AB1A	Black	–	–	–	1	1	–	1	–	1	1	–	–	–	–	1	–	–	
AB1V	Dark Brown	–	–	–	1	1	–	1	–	1	1	–	–	–	–	1	–	–	
-- 13000 -- CARPET ASSY. -- FRONT FLOOR -- COLUMN SHIFT																			
XB 54 13000 AA1A	Black	1	1	1	1	–	1	1	1	1	–	1	1	1	1	1	1	1	
AA1V	Dark Brown	1	1	1	1	–	1	1	1	1	–	1	1	1	1	1	1	1	
XBE 54 13000 CA1A	Black	–	–	–	1	–	–	–	–	–	–	–	–	–	–	–	–	–	
(Thailand only) CA2V	Dark Brown	–	–	–	1	–	–	–	–	–	–	–	–	–	–	–	–	–	
-- 13000 -- CARPET ASSY. -- FRONT FLOOR -- FLOOR SHIFT																			
XB 54 13000 BA1A	Black	1	1	1	1	1	1	1	1	1	1	1	1	1	1	1	1	1	
BA1V	Dark Brown	1	1	1	1	1	1	1	1	1	1	1	1	1	1	1	1	1	
XBE 54 13000 EA1A	Black	–	–	–	1	–	–	–	–	–	–	–	–	–	–	–	–	–	
(Thailand only) EA2V	Dark Brown	–	–	–	1	–	–	–	–	–	–	–	–	–	–	–	–	–	
XB 54 13000 EA1A	Black	1	–	–	–	–	–	–	–	–	–	–	–	–	–	–	–	–	
(Thailand only) EA1V	Dark Brown	1	–	–	–	–	–	–	–	–	–	–	–	–	–	–	–	–	
72DA 54 13A010 AWOSO	Black	–	1	–	–	–	–	–	–	–	–	–	–	–	–	–	–	–	
(Police O.S.O.-F-6054/5)																			
-- 13000 -- CARPET ASSY. -- FRONT FLOOR -- WHEN HEATER OR VENTILATION UNIT NOT FITTED																			
XAE 54 13000 AA1A	Black	–	–	1	1	1	–	–	–	–	–	–	–	–	–	–	–	–	
(Export only) AA1V	Dark Brown	–	–	1	1	1	–	–	–	–	–	–	–	–	–	–	–	–	
-- 13010 -- MAT -- FRONT FLOOR																			
XB 54 13010 BA1A	Black	–	–	–	–	–	–	–	–	–	–	1	1	–	–	–	1	1	
BA1V	Dark Brown	–	–	–	–	–	–	–	–	–	–	1	1	–	–	–	1	1	
XB 54 13010 AA1A	Black	1	1	1	–	–	1	1	–	–	–	1	1	–	–	–	1	1	
(Taxi & all police exc. O.S.O.-F-6054/5)																			
V74DA 54 13010 AAP0L	Black	–	1	–	–	–	–	–	–	–	–	–	–	–	–	–	–	–	
(Police O.S.O.-F-6054/5)																			
-- 13010 -- MAT -- FRONT FLOOR -- COLUMN SHIFT ONLY																			
XB 54 13010 AA1A	Black	1	1	–	–	–	–	–	–	–	–	1	1	1	1	–	1	1	
AA1V	Dark Brown	1	1	–	–	–	–	–	–	–	–	1	1	1	1	–	1	1	
XB 54 13010 CA1A	Black	1	–	–	–	–	–	–	–	–	–	–	–	–	–	–	–	–	
(Thailand only) CA1V	Dark Brown	1	–	–	–	–	–	–	–	–	–	–	–	–	–	–	–	–	

PART NUMBER	COLOUR	BODY TYPE																		
		54							65			66		71			78	
		A	B	C	D	H	E	G	B	D	H	A	B	A	B	D	A	B
– – 13049 – – CARPET ASSY. – AUXILIARY FLOOR																		
XB 71 13049 AA1A	Black	–	–	–	–	–	–	–	–	–	–	–	–	1	1	1	–	–
(Front) AA1V	Dark Brown	–	–	–	–	–	–	–	–	–	–	–	–	1	1	1	–	–
XB 71 13049 BA1A	Black	–	–	–	–	–	–	–	–	–	–	–	–	1	1	1	–	–
(Rear) BA1V	Dark Brown	–	–	–	–	–	–	–	–	–	–	–	–	1	1	1	–	–
– – 13054 – – MAT – REAR FLOOR																		
XA 54 13054 AATA	Black	1	1	1	–	–	1	1	–	–	–	–	–	–	–	–	–	–
(Taxi & Police)																		
XA 65 13054 AA1A	Black	–	–	–	–	–	–	–	1	–	–	–	–	–	–	–	–	–
AA1V	Dark Brown	–	–	–	–	–	–	–	1	–	–	–	–	–	–	–	–	–
XB 78 13054 A	Black	–	–	–	–	–	–	–	–	–	–	–	–	–	–	–	1	1
– – 13054 – – MAT – REAR FLOOR – COLUMN SHIFT																		
XA 54 13054 AA1A	Black	1	1	–	–	–	–	–	–	–	–	–	–	1	1	–	–	–
AA1V	Dark Brown	1	1	–	–	–	–	–	–	–	–	–	–	1	1	–	–	–
– – 13054/5 – – MAT – REAR FLOOR																		
NOTE: When ordering basic No. 13054 – R.H.																		
13055 – L.H.																		
XA 66 13054 AA1A	Black	–	–	–	–	–	–	–	–	–	–	1	1	–	–	–	1	1
AA1V	Dark Brown	–	–	–	–	–	–	–	–	–	–	1	1	–	–	–	1	1
– – 13054 – – MAT – CARGO FLOOR																		
XB 78 13054 A	Black	–	–	–	–	–	–	–	–	–	–	–	–	–	–	–	–	1
– – 13054 – – CARPET ASSY. – REAR FLOOR																		
XA 54 13054 BA1A	Black	1	1	1	1	1	1	1	–	–	–	–	–	1	1	1	–	–
BA1V	Dark Brown	1	1	1	1	1	1	1	–	–	–	–	–	1	1	1	–	–
XA 65 13054 BA1A	Black	–	–	–	–	–	–	–	1	1	1	–	–	–	–	–	–	–
BA1V	Dark Brown	–	–	–	–	–	–	–	1	1	1	–	–	–	–	–	–	–
XA 66 13054 BA1A	Black	–	–	–	–	–	–	–	–	–	–	1	1	–	–	–	1	1
BA1V	Dark Brown	–	–	–	–	–	–	–	–	–	–	1	1	–	–	–	1	1
XA 54 13054 DA1A	Black	–	–	1	1	1	1	1	–	–	–	–	–	–	–	1	–	1
(Export – exc. Sth. Africa) DA1V	Dark Brown	–	–	1	1	1	1	1	–	–	–	–	–	–	–	1	–	–
– – 13065 – – CARPET ASSY. – REAR FLOOR AUXILIARY																		
XB 71 13065 AA1A	Black	–	–	–	–	–	–	–	–	–	–	–	–	1	1	1	–	–
(Aux. rear seats) AA1V	Dark Brown	–	–	–	–	–	–	–	–	–	–	–	–	1	1	1	–	–
– – 13144/5 – – MOULDING – CENTRE BODY PILLAR LOWER																		
NOTE: When ordering basic No. 13144 – R.H.																		
13145 – L.H.																		
XA 54 13144 AA1A	Black	1	1	1	1	1	1	1	–	–	–	–	–	1	1	1	–	–
AA1V	Dark Brown	1	1	1	1	1	1	1	–	–	–	–	–	1	1	1	–	–
– – 13176 – – CARPET ASSY. – REAR FLOOR REAR (REFER ALSO 13182)																		
XB 71 13176 AA1A	Black	–	–	–	–	–	–	–	–	–	–	–	–	1	1	1	–	–
(With aux. rear seats) AA1V	Dark Brown	–	–	–	–	–	–	–	–	–	–	–	–	1	1	1	–	–

PART NUMBER				COLOUR	BODY TYPE																	
					54							65			66		71			78	
					A	B	C	D	H	E	G	B	D	H	A	B	A	B	D	A	B
– – 13182 – – MAT – REAR FLOOR REAR																					
XA	71	13182	AA1A	Black	–	–	–	–	–	–	–	–	–	–	–	–	1	1	–	–	–
			AA1V	Dark Brown	–	–	–	–	–	–	–	–	–	–	–	–	1	1	–	–	–
– – 13182 – – CARPET ASSY. – REAR FLOOR REAR (REFER ALSO 13176)																					
XA	71	13182	BA1A	Black	–	–	–	–	–	–	–	–	–	–	–	–	–	–	1	–	–
(W/o aux. rear seats)			BA1V	Dark Brown	–	–	–	–	–	–	–	–	–	–	–	–	–	–	1	–	–
– – 23916/7 – – TRIM COVER – FRONT DOOR UPPER																					
NOTE: When ordering basic No. 23916 – R.H.																					
23917 – L.H.																					
XA	54	23916	AA1A	Black	–	–	1	–	–	1	–	–	–	–	–	–	–	–	–	–	–
			AA2E	Parchment	–	–	1	–	–	1	–	–	–	–	–	–	–	–	–	–	–
			AA2F	Saddle	–	–	1	–	–	1	–	–	–	–	–	–	–	–	–	–	–
			AA1H	White	–	–	1	–	–	1	–	–	–	–	–	–	–	–	–	–	–
			AA1Q	Chamois	–	–	1	–	–	1	–	–	–	–	–	–	–	–	–	–	–
– – 23942/3 – – PANEL ASSY. – FRONT DOOR (REWORK FOR ELECTRIC WINDOW APPLICATION)																					
NOTE: When ordering basic No. 23942 – R.H.																					
23943 – L.H.																					
XA	54	23942	AC2A	Black	1	–	–	–	–	–	–	–	–	–	–	–	1	–	–	–	–
			AC2F	Saddle	1	–	–	–	–	–	–	–	–	–	–	–	1	–	–	–	–
XB	54	23942	BA1A	Black	–	1	–	–	–	–	–	–	–	–	–	–	–	1	–	–	–
			BA1E	Parchment	–	1	–	–	–	–	–	–	–	–	–	–	–	1	–	–	–
			BA1F	Saddle	–	1	–	–	–	–	–	–	–	–	–	–	–	1	–	–	–
			BA1H	White	–	1	–	–	–	–	–	–	–	–	–	–	–	1	–	–	–
			BA1Q	Chamois	–	1	–	–	–	–	–	–	–	–	–	–	–	1	–	–	–
XB	54	23942	CA1A	Black	–	–	–	1	1	–	–	–	–	–	–	–	–	–	1	–	–
			CA1E	Parchment	–	–	–	1	1	–	–	–	–	–	–	–	–	–	1	–	–
			CA1F	Saddle	–	–	–	1	1	–	–	–	–	–	–	–	–	–	1	–	–
			CA1H	White	–	–	–	1	1	–	–	–	–	–	–	–	–	–	1	–	–
			CA1Q	Chamois	–	–	–	1	1	–	–	–	–	–	–	–	–	–	1	–	–
			CA1V	Brown	–	–	–	1	1	–	–	–	–	–	–	–	–	–	1	–	–
ZG	54	23942	AA1A	Black	–	–	1	–	–	1	–	–	–	–	–	–	–	–	–	–	–
			AA1E	Parchment	–	–	1	–	–	1	–	–	–	–	–	–	–	–	–	–	–
			AA1F	Saddle	–	–	1	–	–	1	–	–	–	–	–	–	–	–	–	–	–
			AA1H	White	–	–	1	–	–	1	–	–	–	–	–	–	–	–	–	–	–
			AA1Q	Chamois	–	–	1	–	–	1	–	–	–	–	–	–	–	–	–	–	–
ZG	54	23942	BA1A	Black	–	–	–	–	–	–	1	–	–	–	–	–	–	–	–	–	–
			BA1E	Parchment	–	–	–	–	–	–	1	–	–	–	–	–	–	–	–	–	–
			BA1F	Saddle	–	–	–	–	–	–	1	–	–	–	–	–	–	–	–	–	–
			BA1H	White	–	–	–	–	–	–	1	–	–	–	–	–	–	–	–	–	–
			BA1V	Brown	–	–	–	–	–	–	1	–	–	–	–	–	–	–	–	–	–
			BA1Q	Chamois	–	–	–	–	–	–	1	–	–	–	–	–	–	–	–	–	–
XB	65	23942	AA1A	Black	–	–	–	–	–	–	–	1	–	–	–	1	–	–	–	–	1
			AA1E	Parchment	–	–	–	–	–	–	–	1	–	–	–	1	–	–	–	–	1
			AA1F	Saddle	–	–	–	–	–	–	–	1	–	–	–	1	–	–	–	–	1
			AA1H	White	–	–	–	–	–	–	–	1	–	–	–	1	–	–	–	–	1
			AA1Q	Chamois	–	–	–	–	–	–	–	1	–	–	–	1	–	–	–	–	1

PART NUMBER				COLOUR	BODY TYPE																	
					54							65			66		71			78	
					A	B	C	D	H	E	G	B	D	H	A	B	A	B	D	A	B
– – 23942/3 – – PANEL ASSY. – FRONT DOOR (REWORK FOR ELECTRIC WINDOW APPLICATION) – Continued																						
XB		65	23942	BA1A	Black	–	–	–	–	–	–	–	–	1	1	–	–	–	–	–	–	–
				BA1E	Parchment	–	–	–	–	–	–	–	–	1	1	–	–	–	–	–	–	–
				BA1F	Saddle	–	–	–	–	–	–	–	–	1	1	–	–	–	–	–	–	–
				BA1H	White	–	–	–	–	–	–	–	–	1	1	–	–	–	–	–	–	–
				BA1Q	Chamois	–	–	–	–	–	–	–	–	1	1	–	–	–	–	–	–	–
				BA1V	Brown	–	–	–	–	–	–	–	–	1	1	–	–	–	–	–	–	–
XA		66	23942	AE2A	Black	–	–	–	–	–	–	–	–	–	–	1	–	–	–	–	1	–
				AE2F	Saddle	–	–	–	–	–	–	–	–	–	–	1	–	–	–	–	1	–
XA		66	23942	A1RZ	Bronze Green	–	–	–	–	–	–	–	–	–	–	1	–	–	–	–	–	–
(Army O.S.O.-F-6010)																						
– – 24180 – – ARM REST ASSY. – DOOR PULL (REFER ALSO 27540/1)																						
CH	T		24180	AA1A	Black	4	–	–	–	–	–	–	–	–	–	2	–	4	–	–	–	2
				AA1F	Saddle	4	–	–	–	–	–	–	–	–	–	2	–	4	–	–	–	2
CH	T		24180	A1RZ	Bronze Green	–	–	–	–	–	–	–	–	–	–	2	–	–	–	–	–	–
(Army O.S.O.-F-6010)																						
– – 24478/9 – – COVER – LOWER PANEL CENTRE BODY PILLAR																						
NOTE: When ordering basic No. 24478 – R.H.																						
24479 – L.H.																						
XA		66	24478	AA1A	Black	–	–	–	–	–	–	–	–	–	–	1	1	–	–	–	1	1
				AA2E	Parchment	–	–	–	–	–	–	–	–	–	–	–	1	–	–	–	–	1
				AA2F	Saddle	–	–	–	–	–	–	–	–	–	–	1	1	–	–	–	1	1
				AA1H	White	–	–	–	–	–	–	–	–	–	–	–	1	–	–	–	–	1
				AA1Q	Chamois	–	–	–	–	–	–	–	–	–	–	–	1	–	–	–	–	1
– – 24592/3 – – COVER – CENTRE BODY PILLAR FINISH																						
NOTE: When ordering basic No. 24592 – R.H.																						
24593 – L.H.																						
XA		54	25492	AB1A	Black	–	–	–	1	1	1	1	–	–	–	–	–	–	–	–	–	–
				AB2E	Parchment	–	–	–	1	1	1	1	–	–	–	–	–	–	–	–	–	–
				AB2F	Saddle	–	–	–	1	1	1	1	–	–	–	–	–	–	–	–	–	–
				AB1H	White	–	–	–	1	1	1	1	–	–	–	–	–	–	–	–	–	–
				AB1Q	Chamois	–	–	–	1	1	1	1	–	–	–	–	–	–	–	–	–	–
				AB1V	Brown	–	–	–	1	1	1	–	–	–	–	–	–	–	–	–	–	–
– – 27406/7 – – PANEL ASSY. – REAR DOOR (REWORK FOR ELECTRIC WINDOW APPLICATION)																						
NOTE: When ordering basic No. 27406 – R.H.																						
27407 – L.H.																						
XA		54	27406	AB2A	Black	1	–	–	–	–	–	–	–	–	–	–	–	1	–	–	–	–
				AB2F	Saddle	1	–	–	–	–	–	–	–	–	–	–	–	1	–	–	–	–
XB		54	27406	BA1A	Black	–	1	–	–	–	–	–	–	–	–	–	–	–	1	–	–	–
				BA1E	Parchment	–	1	–	–	–	–	–	–	–	–	–	–	–	1	–	–	–
				BA1F	Saddle	–	1	–	–	–	–	–	–	–	–	–	–	–	1	–	–	–
				BA1H	White	–	1	–	–	–	–	–	–	–	–	–	–	–	1	–	–	–
				BA1Q	Chamois	–	1	–	–	–	–	–	–	–	–	–	–	–	1	–	–	–
XB		54	27406	CA1A	Black	–	–	–	1	1	–	–	–	–	–	–	–	–	–	1	–	–
				CA1E	Parchment	–	–	–	1	1	–	–	–	–	–	–	–	–	–	1	–	–
				CA1F	Saddle	–	–	–	1	1	–	–	–	–	–	–	–	–	–	1	–	–
				CA1H	White	–	–	–	1	1	–	–	–	–	–	–	–	–	–	1	–	–
				CA1Q	Chamois	–	–	–	1	1	–	–	–	–	–	–	–	–	–	1	–	–
				CA1V	Brown	–	–	–	1	1	–	–	–	–	–	–	–	–	–	1	–	–

PART NUMBER			COLOUR		BODY TYPE																	
					54							65			66		71			78	
					A	B	C	D	H	E	G	B	D	H	A	B	A	B	D	A	B
-- 27406/7 -- PANEL ASSY. -- REAR DOOR (REWORK FOR ELECTIRC WINDOW APPLICATION) -- Continued																					
ZG	54	27406	AA1A	Black	–	–	1	–	–	1	–	–	–	–	–	–	–	–	–	–	–
			AA1E	Parchment	–	–	1	–	–	1	–	–	–	–	–	–	–	–	–	–	–
			AA1F	Saddle	–	–	1	–	–	1	–	–	–	–	–	–	–	–	–	–	–
			AA1H	White	–	–	1	–	–	1	–	–	–	–	–	–	–	–	–	–	–
			AA1Q	Chamois	–	–	1	–	–	1	–	–	–	–	–	–	–	–	–	–	–
ZG	54	27406	BA1A	Black	–	–	–	–	–	–	1	–	–	–	–	–	–	–	–	–	–
			BA1E	Parchment	–	–	–	–	–	–	1	–	–	–	–	–	–	–	–	–	–
			BA1F	Saddle	–	–	–	–	–	–	1	–	–	–	–	–	–	–	–	–	–
			BA1H	White	–	–	–	–	–	–	1	–	–	–	–	–	–	–	–	–	–
			BA1Q	Chamois	–	–	–	–	–	–	1	–	–	–	–	–	–	–	–	–	–
			BA1V	Brown	–	–	–	–	–	–	1	–	–	–	–	–	–	–	–	–	–
-- 27430/1 -- TRIM COVER -- REAR DOOR UPPER																					
NOTE: When ordering basic No. 27430 -- R.H.																					
27431 -- L.H.																					
XA	54	27430	AA1A	Black	–	–	1	–	–	1	–	–	–	–	–	–	–	–	–	–	–
			AA2E	Parchment	–	–	1	–	–	1	–	–	–	–	–	–	–	–	–	–	–
			AA2F	Saddle	–	–	1	–	–	1	–	–	–	–	–	–	–	–	–	–	–
			AA1H	White	–	–	1	–	–	1	–	–	–	–	–	–	–	–	–	–	–
			AA1Q	Chamois	–	–	1	–	–	1	–	–	–	–	–	–	–	–	–	–	–
-- 27452 -- ASH TRAY ASSY. -- REAR																					
XB	54	27452	A2A	Black	–	–	–	–	–	–	–	2	–	–	–	–	–	–	–	–	–
			A2E	Parchment	–	–	–	–	–	–	–	2	–	–	–	–	–	–	–	–	–
			A5F	Saddle	–	–	–	–	–	–	–	2	–	–	–	–	–	–	–	–	–
			A2H	White	–	–	–	–	–	–	–	2	–	–	–	–	–	–	–	–	–
			A1Q	Chamois	–	–	–	–	–	–	–	2	–	–	–	–	–	–	–	–	–
-- 27540/1 -- ARM REST -- FRONT DOOR (REFER ALSO 24180)																					
NOTE: When ordering basic No. 27540 -- R.H.																					
27541 -- L.H.																					
XA	54	27540	AB1A	Black	–	–	–	1	1	–	1	–	1	1	–	–	–	–	1	–	–
			AB2E	Parchment	–	–	–	1	1	–	1	–	1	1	–	–	–	–	1	–	–
			AB2F	Saddle	–	–	–	1	1	–	1	–	1	1	–	–	–	–	1	–	–
			AB1H	White	–	–	–	1	1	–	1	–	1	1	–	–	–	–	1	–	–
			AB1Q	Chamois	–	–	–	1	1	–	1	–	1	1	–	–	–	–	1	–	–
			AB1V	Brown	–	–	–	1	1	–	1	–	1	1	–	–	–	–	1	–	–
-- 27540 -- ARM REST -- FRONT & REAR DOORS (REFER ALSO 24180)																					
XA	54	27540	BA2A	Black	–	4	4	2	2	4	2	2	–	–	–	2	–	4	2	–	2
			BA2E	Parchment	–	4	4	2	2	4	2	2	–	–	–	2	–	4	2	–	2
			BA3F	Saddle	–	4	4	2	2	4	2	2	–	–	–	2	–	4	2	–	2
			BA2H	White	–	4	4	2	2	4	2	2	–	–	–	2	–	4	2	–	2
			BA1Q	Chamois	–	4	4	2	2	4	2	2	–	–	–	2	–	4	2	–	2
			BA1V	Brown	–	–	–	2	2	–	2	–	–	–	–	–	–	–	2	–	–
-- 29024 -- HOOK -- COAT																					
C8AZ	62	29024	A1E	Parchment	–	2	2	2	–	2	2	–	–	–	–	–	–	–	–	–	–
			A1P	Lt. Grey	2	2	2	2	2	2	2	2	2	2	–	–	2	2	2	–	–

PART NUMBER	COLOUR	BODY TYPE																		
		54							65			66		71			78	
		A	B	C	D	H	E	G	B	D	H	A	B	A	B	D	A	B
– – 31012/3 – – PANEL ASSY. – QUARTER TRIM (REWORK FOR ELECTRIC WINDOW APPLICATION)																		
NOTE: When ordering basic No. 31012 – R.H. 31013 – L.H.																		
XB 65 31012 AA1A	Black	–	–	–	–	–	–	–	–	1	1	–	–	–	–	–	–	–
AA1E	Parchment	–	–	–	–	–	–	–	–	1	1	–	–	–	–	–	–	–
AA1F	Saddle	–	–	–	–	–	–	–	–	1	1	–	–	–	–	–	–	–
AA1H	White	–	–	–	–	–	–	–	–	1	1	–	–	–	–	–	–	–
AA1Q	Chamois	–	–	–	–	–	–	–	–	1	1	–	–	–	–	–	–	–
AA1V	Brown	–	–	–	–	–	–	–	–	1	1	–	–	–	–	–	–	–
XB 71 31012 AA1A	Black	–	–	–	–	–	–	–	–	–	–	–	–	1	1	1	–	–
(With aux. rear seat) AA1V	Dark Brown	–	–	–	–	–	–	–	–	–	–	–	–	1	1	1	–	–
– – 310A12/3 – – PANEL – QUARTER TRIM UPPER																		
NOTE: When ordering basic No. 310A12 – R.H. 310A13 – L.H.																		
XA 66 310A12 AA1H	Light Grey	–	–	–	–	–	–	–	–	–	–	1	1	–	–	–	–	–
XA 78 310A12 AC1P	Light Grey	–	–	–	–	–	–	–	–	–	–	–	–	–	–	–	1	1
– – 31016/7 – – COVER ASSY. – QTR. WHEEL HOUSE																		
NOTE: When ordering basic No. – 31016 – R.H. 31017 – L.H.																		
XA 71 31016 AA1A	Black	–	–	–	–	–	–	–	–	–	–	–	–	–	–	1	–	–
AA1V	Dark Brown	–	–	–	–	–	–	–	–	–	–	–	–	–	–	1	–	–
– – 310A64/5 – – PANEL ASSY. – QTR. LOWER																		
NOTE: When ordering basic No. 310A64 – R.H. 310A65 – L.H.																		
XA 65 310A64 AA1A	Black	–	–	–	–	–	–	–	1	1	1	–	–	–	–	–	–	–
AA2E	Parchment	–	–	–	–	–	–	–	1	1	1	–	–	–	–	–	–	–
AA2F	Saddle	–	–	–	–	–	–	–	1	1	1	–	–	–	–	–	–	–
AA1H	White	–	–	–	–	–	–	–	1	1	1	–	–	–	–	–	–	–
AA1Q	Chamois	–	–	–	–	–	–	–	1	1	1	–	–	–	–	–	–	–
AA1V	Brown	–	–	–	–	–	–	–	1	1	1	–	–	–	–	–	–	–
– – 31112/3 – – PANEL ASSY. – QTR. REAR (REFER ALSO 31148/9)																		
NOTE: When ordering basic No. 31112 – R.H. 31113 – L.H.																		
XA 71 31112 AD1A	Black – to 8/74	–	–	–	–	–	–	–	–	–	–	–	–	1	–	–	–	–
(Without aux. rear seat) AD1V	Dark Brown – to 8/74	–	–	–	–	–	–	–	–	–	–	–	–	1	–	–	–	–
V 388192 S1A (Clip)	Black	–	–	–	–	–	–	–	–	–	–	–	–	a/r	–	–	–	–
V 388192 S1F (Clip)	Saddle	–	–	–	–	–	–	–	–	–	–	–	–	a/r	–	–	–	–
– – 31136/7 – – PANEL ASSY. – QTR. TRIM																		
NOTE: When ordering basic No. – 31136 – R.H. 31137 – L.H.																		
XA 54 31136 AB1A	Black – to 12/74	1	1	1	1	1	–	–	–	–	–	–	–	–	–	–	–	–
AB2E	Parchment – to 12/74	–	1	1	1	1	–	–	–	–	–	–	–	–	–	–	–	–
AB2F	Saddle – to 12/74	1	1	1	1	1	–	–	–	–	–	–	–	–	–	–	–	–
AB1H	White – to 12/74	–	1	1	1	1	–	–	–	–	–	–	–	–	–	–	–	–
AB1Q	Chamois – to 12/74	–	1	1	1	1	–	–	–	–	–	–	–	–	–	–	–	–
AB1V	Dark Brown – to 12/74	1	1	1	1	1	–	–	–	–	–	–	–	–	–	–	–	–

PART NUMBER	COLOUR	BODY TYPE																	
		54							65			66		71			78	
		A	B	C	D	H	E	G	B	D	H	A	B	A	B	D	A	B
– – 31136/7 – – PANEL ASSY. – QTR. TRIM – Continued																		
XB 54 31136 AA1A	Black – from 12/74	1	1	1	1	1	–	–	–	–	–	–	–	–	–	–	–	–
AA1E	Parchment – from 12/74	–	1	1	1	1	–	–	–	–	–	–	–	–	–	–	–	–
AA1F	Saddle – from 12/74	1	1	1	1	1	–	–	–	–	–	–	–	–	–	–	–	–
AA1H	White – from 12/74	–	1	1	1	1	–	–	–	–	–	–	–	–	–	–	–	–
AA1Q	Chamois – from 12/74	–	1	1	1	1	–	–	–	–	–	–	–	–	–	–	–	–
AA1V	Brown – from 12/74	1	1	1	1	1	–	–	–	–	–	–	–	–	–	–	–	–
ZF 54 31136 AB1A	Black – to 12/74	–	–	–	–	–	1	1	–	–	–	–	–	–	–	–	–	–
AB2E	Parchment – to 12/74	–	–	–	–	–	1	1	–	–	–	–	–	–	–	–	–	–
AB2F	Saddle – to 12/74	–	–	–	–	–	1	1	–	–	–	–	–	–	–	–	–	–
AB1H	White – to 12/74	–	–	–	–	–	1	1	–	–	–	–	–	–	–	–	–	–
AB1Q	Chamois – to 12/74	–	–	–	–	–	1	1	–	–	–	–	–	–	–	–	–	–
AB1V	Dark Brown – to 12/74	–	–	–	–	–	1	1	–	–	–	–	–	–	–	–	–	–
ZG 54 31136 AA1A	Black – from 12/74	–	–	–	–	–	1	1	–	–	–	–	–	–	–	–	–	–
AA2E	Parchment – from 12/74	–	–	–	–	–	1	1	–	–	–	–	–	–	–	–	–	–
AA2F	Saddle – from 12/74	–	–	–	–	–	1	1	–	–	–	–	–	–	–	–	–	–
AA1H	White – from 12/74	–	–	–	–	–	1	1	–	–	–	–	–	–	–	–	–	–
AA1Q	Chamois – from 12/74	–	–	–	–	–	1	1	–	–	–	–	–	–	–	–	–	–
AA1V	Brown – from 12/74	–	–	–	–	–	1	1	–	–	–	–	–	–	–	–	–	–
XA 71 31136 AC1A	Black	–	–	–	–	–	–	–	–	–	–	–	–	1	1	1	–	–
AC2E	Parchment	–	–	–	–	–	–	–	–	–	–	–	–	–	1	1	–	–
AC2F	Saddle	–	–	–	–	–	–	–	–	–	–	–	–	1	1	1	–	–
AC1H	White	–	–	–	–	–	–	–	–	–	–	–	–	1	1	1	–	–
AC1Q	Chamois	–	–	–	–	–	–	–	–	–	–	–	–	–	1	1	–	–
AC1V	Dark Brown	–	–	–	–	–	–	–	–	–	–	–	–	1	1	1	–	–
– – 31148/9 – – PANEL ASSY. – QTR. REAR (REFER ALSO 31112/3)																		
XA 71 31148 AA1A	Black – from 8/74	–	–	–	–	–	–	–	–	–	–	–	–	1	–	–	–	–
(Without aux. rear seat) AB1V	Dark Brown – from 8/74	–	–	–	–	–	–	–	–	–	–	–	–	1	–	–	–	–
XA 71 31148 AA1A	Black	–	–	–	–	–	–	–	–	–	–	–	–	–	1	1	–	–
(Without aux. rear seat) AB1V	Dark Brown	–	–	–	–	–	–	–	–	–	–	–	–	–	1	1	–	–
XB 71 31148 AB1A	Black	–	–	–	–	–	–	–	–	–	–	–	–	1	1	1	–	–
(With aux. rear seat) AB1V	Dark Brown	–	–	–	–	–	–	–	–	–	–	–	–	1	1	1	–	–
XA 71 31149 AA1A	Black	–	–	–	–	–	–	–	–	–	–	–	–	1	1	1	–	–
(With aux. rear seat) AB1V	Dark Brown	–	–	–	–	–	–	–	–	–	–	–	–	1	1	1	–	–
V 388192 S1A (Clip)	Black	–	–	–	–	–	–	–	–	–	–	–	–	a/r	a/r	a/r	a/r	a/r
V 388192 S1F (Clip)	Saddle	–	–	–	–	–	–	–	–	–	–	–	–	a/r	a/r	a/r	a/r	a/r
V 388192 S1P (Clip)	Parchment	–	–	–	–	–	–	–	–	–	–	–	–	a/r	a/r	a/r	a/r	a/r
V 388192 S1V (Clip)	Brown	–	–	–	–	–	–	–	–	–	–	–	–	a/r	a/r	a/r	a/r	a/r

PART NUMBER				COLOUR	BODY TYPE																	
					54							65			66		71			78	
					A	B	C	D	H	E	G	B	D	H	A	B	A	B	D	A	B
– – 45025 – – COVER ASSY. – SPARE WHEEL																					
XB	71	45025	AA1A	Black	–	–	–	–	–	–	–	–	–	–	–	–	1	1	1	–	–
			AA1V	Dark Brown	–	–	–	–	–	–	–	–	–	–	–	–	1	1	1	–	–
– – 45456 – – MAT – LUGGAGE COMPARTMENT FLOOR																					
XA	54	45456	EB1A	Black – to 12/74	1	1	1	1	1	–	–	–	–	–	–	–	–	–	–	–	–
XB	54	45456	AA1A	Black – from 12/74	1	1	1	1	1	–	–	–	–	–	–	–	–	–	–	–	–
XA (Large tank)	54	45456	GB1A	Black	–	–	–	–	1	–	–	–	–	–	–	–	–	–	–	–	–
ZF	54	45456	BA1A	Black – to 12/74	–	–	–	–	–	1	1	–	–	–	–	–	–	–	–	–	–
ZG	54	45456	AA1A	Black – from 12/74	–	–	–	–	–	1	1	–	–	–	–	–	–	–	–	–	–
XA	65	45456	BB1A	Black – to 12/74	–	–	–	–	–	–	–	1	1	1	–	–	–	–	–	–	–
XB	65	45456	AA1A	Black – from 12/74	–	–	–	–	–	–	–	1	1	1	–	–	–	–	–	–	–
– – 46320/1 – – PANEL ASSY. – BACK DOOR																					
NOTE: When ordering basic No. 46320 – R.H. 46321 – L.H.																					
XA	78	46320	AA2A	Black	–	–	–	–	–	–	–	–	–	–	–	–	–	–	–	1	1
			AA1E	Parchment	–	–	–	–	–	–	–	–	–	–	–	–	–	–	–	–	1
			AA2F	Saddle	–	–	–	–	–	–	–	–	–	–	–	–	–	–	–	1	1
			AA1H	White	–	–	–	–	–	–	–	–	–	–	–	–	–	–	–	–	1
			AA1Q	Chamois	–	–	–	–	–	–	–	–	–	–	–	–	–	–	–	–	1
			AA1V	Dark Brown	–	–	–	–	–	–	–	–	–	–	–	–	–	–	–	–	1
– – 46656 – – PANEL – PACKAGE TRAY TRIM (REFER ALSO 46668)																					
XA	65	46656	AB1A	Black	–	–	–	–	–	–	–	1	1	1	–	–	–	–	–	–	–
			AB1V	Dark Brown	–	–	–	–	–	–	–	1	1	1	–	–	–	–	–	–	–
– – 466A56 – – PANEL ASSY. – PACKAGE TRAY																					
XA	65	466A56	AA2A	Black	–	–	–	–	–	–	–	1	1	1	–	–	–	–	–	–	–
			AA1V	Dark Brown	–	–	–	–	–	–	–	1	1	1	–	–	–	–	–	–	–
– – 466B56/7 – – PANEL ASSY. – PACKAGE TRAY SIDE																					
NOTE: When ordering basic No. 466B56 – R.H. 466B57 – L.H.																					
PL	65	466B56	AA2A	Black	–	–	–	–	–	–	–	1	1	1	–	–	–	–	–	–	–
			AA1V	Dark Brown	–	–	–	–	–	–	–	1	1	1	–	–	–	–	–	–	–
– – 46668 – – PANEL – PACKAGE TRAY TRIM (REFER ALSO 46656)																					
XA	54	46668	AA1A	Black	1	1	1	1	1	–	–	–	–	–	–	–	–	–	–	–	–
			AA1V	Dark Brown	1	1	1	1	1	–	–	–	–	–	–	–	–	–	–	–	–
XA (Export only)	54	46668	BA1A	Black	1	1	1	1	1	–	–	–	–	–	–	–	–	–	–	–	–
			BA1V	Dark Brown	1	1	1	1	1	–	–	–	–	–	–	–	–	–	–	–	–
ZF	54	46668	AA2A	Black	–	–	–	–	–	1	1	–	–	–	–	–	–	–	–	–	–
			AA1V	Dark Brown	–	–	–	–	–	1	1	–	–	–	–	–	–	–	–	–	–
ZF (Export only)	54	46668	BA2A	Black	–	–	–	–	–	1	1	–	–	–	–	–	–	–	–	–	–
			BA1V	Dark Brown	–	–	–	–	–	1	1	–	–	–	–	–	–	–	–	–	–

PART NUMBER				COLOUR	BODY TYPE																
					54							65			66		71			78	
					A	B	C	D	H	E	G	B	D	H	A	B	A	B	D	A	B
– – 51916 – – HEADLINING ASSY. – LESS SUPPORTS – EXCEPT WITH SUNROOF																					
XA	54	51916	AA2E	Parchment	–	1	1	1	–	1	1	–	–	–	–	–	–	–	–	–	–
			AA1P	Light Grey	1	1	1	1	1	1	1	–	–	–	–	–	–	–	–	–	–
XA	65	51916	AA1P	Light Grey	–	–	–	–	–	–	–	1	1	1	–	–	–	–	–	–	–
XA	66	51916	AA1P	Light Grey	–	–	–	–	–	–	–	–	–	–	1	1	–	–	–	–	–
XA	71	51916	AA1P	Light Grey	–	–	–	–	–	–	–	–	–	–	–	–	1	1	1	–	–
XA	78	51916	BA1P	Light Grey	–	–	–	–	–	–	–	–	–	–	–	–	–	–	–	1	–
XB	78	51916	AB1P	Light Grey	–	–	–	–	–	–	–	–	–	–	–	–	–	–	–	–	1
XA		20004	A01	Light Grey – H/lining material	1	1	1	1	1	1	1	1	1	1	1	1	1	1	1	1	1
– – 51916 – – HEADLINING ASSY. – LESS SUPPORTS – WITH SUNROOF																					
XA	54	51916	BA1P	Light Grey	1	1	1	1	1	1	1	–	–	–	–	–	–	–	–	–	–
XA	65	51916	BA1P	Light Grey	–	–	–	–	–	–	–	1	1	1	–	–	–	–	–	–	–
– – 51917 – – STRIP ASSY. – HEADLINING REAR																					
XA	78	51917	BA1P	Light Grey	–	–	–	–	–	–	–	–	–	–	–	–	–	–	–	1	–
XB	78	51917	BB1P	Light Grey	–	–	–	–	–	–	–	–	–	–	–	–	–	–	–	–	1
– – 519A19 – – COVER – SLIDING ROOF PANEL																					
XA	54	519A19	A1P	Light Grey	1	1	1	1	1	1	1	1	1	1	–	–	–	–	–	–	–
– – 53700 – – COVER – VINYL ROOF (CUT HOLE FOR SLIDING SUNROOF)																					
XA	54	53700	AA1A	Black	1	1	1	1	1	1	1	–	–	–	–	–	–	–	–	–	–
			AA1B	Blue	1	1	1	1	1	1	1	–	–	–	–	–	–	–	–	–	–
			AA1E	Parchment	1	1	1	1	1	1	1	–	–	–	–	–	–	–	–	–	–
			AA1R	Green	1	1	1	1	1	1	1	–	–	–	–	–	–	–	–	–	–
			AA1V	Brown	1	1	1	1	1	1	1	–	–	–	–	–	–	–	–	–	–
XA	65	53700	AA1A	Black	–	–	–	–	–	–	–	1	1	1	–	–	–	–	–	–	–
			AA1B	Blue	–	–	–	–	–	–	–	1	1	1	–	–	–	–	–	–	–
			AA1E	Parchment	–	–	–	–	–	–	–	1	1	1	–	–	–	–	–	–	–
			AA1R	Green	–	–	–	–	–	–	–	1	1	1	–	–	–	–	–	–	–
			AA1V	Brown	–	–	–	–	–	–	–	1	1	1	–	–	–	–	–	–	–
– – 53700 – – COVER – SLIDING ROOF PANEL																					
XA	54	53700	BA1A	Black	1	1	1	1	1	1	1	–	–	–	–	–	–	–	–	–	–
			BA1B	Blue	1	1	1	1	1	1	1	–	–	–	–	–	–	–	–	–	–
			BA1E	Parchment	1	1	1	1	1	1	1	–	–	–	–	–	–	–	–	–	–
			BA1R	Green	1	1	1	1	1	1	1	–	–	–	–	–	–	–	–	–	–
			BA1V	Brown	1	1	1	1	1	1	1	–	–	–	–	–	–	–	–	–	–
XA	65	53700	BA1A	Black	–	–	–	–	–	–	–	1	1	1	–	–	–	–	–	–	–
			BA1B	Blue	–	–	–	–	–	–	–	1	1	1	–	–	–	–	–	–	–
			BA1E	Parchment	–	–	–	–	–	–	–	1	1	1	–	–	–	–	–	–	–
			BA1R	Green	–	–	–	–	–	–	–	1	1	1	–	–	–	–	–	–	–
			BA1V	Brown	–	–	–	–	–	–	–	1	1	1	–	–	–	–	–	–	–

– – 60004/5 – – SEAT ASSY. – FRONT

Refer Soft Trim Seat Catalogue – Cat. 133

– – 60032 – – BACK ASSY. – REAR SEAT

Refer Soft Trim Seat Catalogue – Cat. 133

PART NUMBER				COLOUR	BODY TYPE																	
					54							65			66		71			78	
					A	B	C	D	H	E	G	B	D	H	A	B	A	B	D	A	B
– – 600A46 – – BELT ASSY. – REAR SEAT LAP TYPE																					
XB	54	600A46	AA1A	Black – to 1/74	1	1	1	1	1	1	1	–	–	–	–	–	1	1	1	–	–
			AA1V	Dark Brown – to 1/74	1	1	1	1	1	1	1	–	–	–	–	–	1	1	1	–	–
XB	54	600A46	AB1A	Black – from 1/74 to 1/75	1	1	1	1	1	1	1	–	–	–	–	–	1	1	1	–	–
			AB1V	Dark Brown – from 1/74 to 1/75	1	1	1	1	1	1	1	–	–	–	–	–	1	1	1	–	–
XBB	54	600A46	AA1A	Black–from 1/75	1	1	1	1	1	1	1	–	–	–	–	–	1	1	1	–	–
			AA1V	Dark Brown – from 1/75	1	1	1	1	1	1	1	–	–	–	–	–	1	1	1	–	–
XB	65	600A46	AB1A	Black – to 1/75	–	–	–	–	–	–	–	1	1	1	–	–	–	–	–	–	–
			AB1V	Dark Brown – to 1/75	–	–	–	–	–	–	–	1	1	1	–	–	–	–	–	–	–
XBB	65	600A46	AA1A	Black–from 1/75	–	–	–	–	–	–	–	1	1	1	–	–	–	–	–	–	–
			AA1V	Dark Brown – from 1/75	–	–	–	–	–	–	–	1	1	1	–	–	–	–	–	–	–
XB (Aux. rear seats)	71	600A46	AB1A	Black – to 1/74	–	–	–	–	–	–	–	–	–	–	–	–	2	2	2	–	–
			AB1V	Dark Brown – to 1/74	–	–	–	–	–	–	–	–	–	–	–	–	2	2	2	–	–
XB (Aux. rear seats)	71	600A46	AD1A	Black – from 1/74 to 1/75	–	–	–	–	–	–	–	–	–	–	–	–	2	2	2	–	–
			AD1V	Dark Brown – from 1/74 to 1/75	–	–	–	–	–	–	–	–	–	–	–	–	2	2	2	–	–
XBB (Aux. rear seats)	54	600A46	AA1A	Black–from 1/75	–	–	–	–	–	–	–	–	–	–	–	–	2	2	2	–	–
			AA1V	Dark Brown – from 1/75	–	–	–	–	–	–	–	–	–	–	–	–	2	2	2	–	–
– – 60050/1 – – CUSHION ASSY. – FRONT SEAT																					
Refer Soft Trim Seat Catalogue – Cat. 133																					
– – 60080 – – CUSHION ASSY. – REAR SEAT																					
Refer Soft Trim Seat Catalogue – Cat. 133																					
– – 60136/7 – – BACK ASSY. – FRONT SEAT																					
Refer Soft Trim Seat Catalogue – Cat. 133																					
– – 608A22 – – RETAINER – AUX. SEAT BACK																					
XB	71	608A22	AA1A	Black	–	–	–	–	–	–	–	–	–	–	–	–	1	1	1	–	–
			AA1E	Parchment	–	–	–	–	–	–	–	–	–	–	–	–	–	1	1	–	–
			AA1F	Saddle	–	–	–	–	–	–	–	–	–	–	–	–	1	1	1	–	–
			AA1H	White	–	–	–	–	–	–	–	–	–	–	–	–	–	1	1	–	–
			AA1Q	Chamois	–	–	–	–	–	–	–	–	–	–	–	–	–	1	1	–	–
			AA1V	Brown	–	–	–	–	–	–	–	–	–	–	–	–	–	–	1	–	–
– – 610A75 – – COVER – SEAT BELT CENTRE PILLAR MOUNTING BOLT																					
XB	54	610A75	AA1A	Black	2	2	2	2	2	2	2	2	2	2	2	2	2	2	2	2	2
			AA1V	Brown	2	2	2	2	2	2	2	2	2	2	2	2	2	2	2	2	2
– – 610A94 – – CLIP – SEAT BELT STOWAGE																					
XB	54	610A94	AA1A	Black	2	2	2	2	2	2	2	2	2	2	–	–	2	2	2	–	–
			AA1V	Saddle	2	2	2	2	2	2	2	2	2	2	–	–	2	2	2	–	–

PART NUMBER			COLOUR	BODY TYPE																	
				54							65			66		71			78	
				A	B	C	D	H	E	G	B	D	H	A	B	A	B	D	A	B
-- 61172 -- BELT ASSY. - FRONT SEAT BENCH - LAP TYPE																				
XB	54	61172	AB1A	Black - to 1/75	1	1	1	-	-	1	1	-	-	-	1	1	1	1	-	1	1
			AB1V	Dark Brown - to 1/75	1	1	1	-	-	1	1	-	-	-	1	1	1	1	-	1	1
XBB	54	61172	AA1A	Black - from 1/75	1	1	1	-	-	1	1	-	-	-	1	1	1	1	-	1	1
			AA1V	Dark Brown - from 1/75	1	1	1	-	-	1	1	-	-	-	1	1	1	1	-	1	1
-- 61201/2 -- BELT ASSY. - FRONT SEAT BUCKET - COMB TYPE																				
NOTE: When ordering basic No. 61201 - R.H. 61202 - L.H.																				
XB	54	61201	AB1A	Black - to 1/75	1	1	1	1	1	1	1	-	-	-	-	-	1	1	1	-	-
			AB1V	Dark Brown - to 1/75	1	1	1	1	1	1	1	-	-	-	-	-	1	1	1	-	-
XBB	54	61201	AA1A	Black - from 1/75	1	1	1	1	1	1	1	-	-	-	-	-	1	1	1	-	-
			AA1V	Dark Brown - from 1/75	1	1	1	1	1	1	1	-	-	-	-	-	1	1	1	-	-
XB	65	61201	AB1A	Black - to 1/75	-	-	-	-	-	-	-	1	1	1	-	-	1	1	1	-	-
			AB1V	Dark Brown - to 1/75	-	-	-	-	-	-	-	1	1	1	-	-	-	-	-	-	-
XBB	65	61201	AA1A	Black - from 1/75	-	-	-	-	-	-	-	1	1	1	-	-	-	-	-	-	-
			AA1V	Dark Brown - from 1/75	-	-	-	-	-	-	-	1	1	1	-	-	-	-	-	-	-
XB	66	61201	AB1A	Black - to 1/75	-	-	-	-	-	-	-	-	-	-	1	1	-	-	-	1	1
			AB1V	Dark Brown - to 1/75	-	-	-	-	-	-	-	-	-	-	1	1	-	-	-	1	1
XBB	66	61201	AA1A	Black - from 1/75	-	-	-	-	-	-	-	-	-	-	1	1	-	-	-	1	1
			AA1V	Dark Brown - from 1/75	-	-	-	-	-	-	-	-	-	-	1	1	-	-	-	1	1
304763 S2				Bolt	2	2	2	2	2	2	2	2	2	2	2	2	2	2	2	2	2
V 387915 S8				Spacer - s/belt mounting	a/r	a/r	a/r	a/r	a/r	a/r	a/r	a/r	a/r	a/r	a/r	a/r	a/r	a/r	a/r	a/r	a/r
-- 61201 -- BELT ASSY. - FRONT SEAT BENCH - COMB TYPE																				
XB	54	61201	BB1A	Black - to 1/75	2	2	2	-	-	2	2	-	-	-	-	-	2	2	-	-	-
			BB1V	Dark Brown - to 1/75	2	2	2	-	-	2	2	-	-	-	-	-	2	2	-	-	-
XBB	54	61201	BA1A	Black - from 1/75	2	2	2	-	-	2	2	-	-	-	-	-	2	2	-	-	-
			BA1V	Dark Brown - from 1/75	2	2	2	-	-	2	2	-	-	-	-	-	2	2	-	-	-
XB	66	61201	BB1A	Black - to 1/75	-	-	-	-	-	-	-	-	-	-	2	2	-	-	-	2	2
			BB1V	Dark Brown - to 1/75	-	-	-	-	-	-	-	-	-	-	2	2	-	-	-	2	2
XBB	66	61201	BA1A	Black - from 1/75	-	-	-	-	-	-	-	-	-	-	2	2	-	-	-	2	2
			BA1V	Dark Brown - from 1/75	-	-	-	-	-	-	-	-	-	-	2	2	-	-	-	2	2

PART NUMBER				COLOUR	BODY TYPE																
					54							65			66		71			78	
					A	B	C	D	H	E	G	B	D	H	A	B	A	B	D	A	B
– – 613A77 – – BELT ASSY. – REAR SEAT COMB TYPE																					
XB	54	613A77	AB1A	Black – to 1/75	2	2	2	2	2	2	2	–	–	–	–	–	–	–	–	–	–
			AB1V	Dark Brown – to 1/75	2	2	2	2	2	2	2	–	–	–	–	–	–	–	–	–	–
XBB	54	613B84	AA1A	Black – from 1/75	2	2	2	2	2	2	2	–	–	–	–	–	–	–	–	–	–
			AA1V	Dark Brown – from 1/75	2	2	2	2	2	2	2	–	–	–	–	–	–	–	–	–	–
XB	65	613A77	AA1A	Black – to 1/74	–	–	–	–	–	–	–	2	2	2	–	–	–	–	–	–	–
			AA1V	Dark Brown – to 1/74	–	–	–	–	–	–	–	2	2	2	–	–	–	–	–	–	–
XB	65	613A77	AB1A	Black – from 1/74 to 1/75	–	–	–	–	–	–	–	2	2	2	–	–	–	–	–	–	–
			AB1V	Dark Brown – from 1/74 to 1/75	–	–	–	–	–	–	–	2	2	2	–	–	–	–	–	–	–
XBB	65	613B84	AA1A	Black – from 1/75	–	–	–	–	–	–	–	2	2	2	–	–	–	–	–	–	–
			AA1V	Dark Brown – from 1/75	–	–	–	–	–	–	–	2	2	2	–	–	–	–	–	–	–
XB	71	613A77	AB1A	Black – to 1/75	–	–	–	–	–	–	–	–	–	–	–	–	2	2	2	–	–
			AB1V	Dark Brown – to 1/75	–	–	–	–	–	–	–	–	–	–	–	–	2	2	2	–	–
XBB	71	613B84	AA1A	Black – from 1/75	–	–	–	–	–	–	–	–	–	–	–	–	2	2	2	–	–
			AA1V	Dark Brown – from 1/75	–	–	–	–	–	–	–	–	–	–	–	–	2	2	2	–	–
– – 613B84 – – BELT ASSY. – REAR SEAT COMB TYPE (REFER 613A77)																					
– – 62186 – – SHIELD – FRONT BUCKET SEAT CUSHION – SIDE (NOT SERVICED – DEALER TO FABRICATE)																					
– – 62900/1 – – COVER ASSY. – FRONT SEAT CUSHION																					
Refer Soft Trim Seat Catalogue – Cat. 133																					
– – 629A06 – – COVER – BUCKET FRONT SEAT BRACKET SIDE INNER																					
XA	65	629A06	AA1A	Black – to 1/75	–	–	–	2	2	2	2	–	2	2	–	–	–	–	2	–	–
			AA2E	Parchment – to 1/75	–	–	–	2	2	2	2	–	2	2	–	–	–	–	2	–	–
			AA2F	Saddle – to 1/75	–	–	–	2	2	2	2	–	2	2	–	–	–	–	2	–	–
			AA1H	White – to 1/75	–	–	–	2	2	2	2	–	2	2	–	–	–	–	2	–	–
			AA1Q	Chamois – to 1/75	–	–	–	2	2	2	2	–	2	2	–	–	–	–	2	–	–
			AA1V	Dark Brown – to 1/75	–	–	–	2	2	2	2	–	2	2	–	–	–	–	2	–	–
XB	54	629A06	AA1A	Black – from 1/75	–	–	–	2	2	2	2	–	2	2	–	–	–	–	2	–	–
			AA2E	Parchment – from 1/75	–	–	–	2	2	2	2	–	2	2	–	–	–	–	2	–	–
			AA2F	Saddle – from 1/75	–	–	–	2	2	2	2	–	2	2	–	–	–	–	2	–	–
			AA1H	White – from 1/75	–	–	–	2	2	2	2	–	2	2	–	–	–	–	2	–	–
			AA1Q	Chamois – from 1/75	–	–	–	2	2	2	2	–	2	2	–	–	–	–	2	–	–
			AA1V	Brown – from 1/75	–	–	–	2	2	2	2	–	2	2	–	–	–	–	2	–	–
– – 63804 – – COVER ASSY. – REAR SEAT CUSHION																					
Refer Soft Trim Seat Catalogue – Cat. 133																					
– – 64416/7 – – COVER ASSY. – FRONT SEAT BACK																					
Refer Soft Trim Seat Catalogue – Cat. 133																					

PART NUMBER			COLOUR		BODY TYPE																
					54							65			66		71			78	
					A	B	C	D	H	E	G	B	D	H	A	B	A	B	D	A	B
– – 644A25 – – BUTTON ASSY. – SEAT TRIM																					
ZF	54	644A25	B2A	Black	–	a/r	a/r	–	–	a/r	–	–	–	–	–	–	–	a/r	–	–	–
			B2E	Parchment	–	a/r	a/r	–	–	a/r	–	–	–	–	–	–	–	a/r	–	–	–
			B5F	Saddle	–	a/r	a/r	–	–	a/r	–	–	–	–	–	–	–	a/r	–	–	–
			B1H	White	–	a/r	a/r	–	–	a/r	–	–	–	–	–	–	–	a/r	–	–	–
			B1Q	Chamois	–	a/r	a/r	–	–	a/r	–	–	–	–	–	–	–	a/r	–	–	–
– – 654A64 – – FASTENER – ZIPPER "18" – SPARE WHEEL COVER (NOT SERVICED)																					
– – 66600 – – COVER ASSY. – REAR SEAT																					
Refer Soft Trim Seat Catalogue – Cat. 133																					
– – 667B28 – – PAD & COVER – AUXILIARY REAR SEAT BACK																					
XB	71	667B28	AB1A	Black	–	–	–	–	–	–	–	–	–	–	–	–	1	1	1	–	–
			AB1E	Parchment	–	–	–	–	–	–	–	–	–	–	–	–	–	1	1	–	–
			AB1F	Saddle	–	–	–	–	–	–	–	–	–	–	–	–	1	1	1	–	–
			AB1H	White	–	–	–	–	–	–	–	–	–	–	–	–	–	1	1	–	–
			AB1Q	Chamois	–	–	–	–	–	–	–	–	–	–	–	–	–	1	1	–	–
			AB1V	Brown	–	–	–	–	–	–	–	–	–	–	–	–	–	–	1	–	–
– – 668A20 – – PAD & COVER – AUXILIARY REAR SEAT CUSHION																					
XB	71	668A20	AB1A	Black	–	–	–	–	–	–	–	–	–	–	–	–	1	1	1	–	–
			AB1E	Parchment	–	–	–	–	–	–	–	–	–	–	–	–	–	1	1	–	–
			AB1F	Saddle	–	–	–	–	–	–	–	–	–	–	–	–	1	1	1	–	–
			AB1H	White	–	–	–	–	–	–	–	–	–	–	–	–	–	1	1	–	–
			AB1Q	Chamois	–	–	–	–	–	–	–	–	–	–	–	–	–	1	1	–	–
			AB1V	Brown	–	–	–	–	–	–	–	–	–	–	–	–	–	–	1	–	–
– – 67086 – – ARMREST – REAR SEAT BACK																					
XA	54	67086	AA2A	Black – to 5/74	–	–	1	–	–	–	–	–	–	–	–	–	–	–	–	–	–
			AA3E	Parchment – to 5/74	–	–	1	–	–	–	–	–	–	–	–	–	–	–	–	–	–
			AA3F	Saddle – to 5/74	–	–	1	–	–	–	–	–	–	–	–	–	–	–	–	–	–
			AA2H	White – to 5/74	–	–	1	–	–	–	–	–	–	–	–	–	–	–	–	–	–
			AA1Q	Chamois – to 5/74	–	–	1	–	–	–	–	–	–	–	–	–	–	–	–	–	–
			AA1V	Brown – to 5/74	–	–	1	–	–	–	–	–	–	–	–	–	–	–	–	–	–
XB	54	67086	AA1A	Black – from 5/74	–	–	1	–	–	–	–	–	–	–	–	–	–	–	–	–	–
			AA1E	Parchment – from 5/74	–	–	1	–	–	–	–	–	–	–	–	–	–	–	–	–	–
			AA1F	Saddle – from 5/74	–	–	1	–	–	–	–	–	–	–	–	–	–	–	–	–	–
			AA1H	White – from 5/74	–	–	1	–	–	–	–	–	–	–	–	–	–	–	–	–	–
XA	54	67086	AA2A	Black	–	–	–	1	1	–	–	–	–	–	–	–	–	–	–	–	–
			AA3E	Parchment	–	–	–	1	1	–	–	–	–	–	–	–	–	–	–	–	–
			AA3F	Saddle	–	–	–	1	1	–	–	–	–	–	–	–	–	–	–	–	–
			AA2H	White	–	–	–	1	1	–	–	–	–	–	–	–	–	–	–	–	–
			AA1Q	Chamois	–	–	–	1	1	–	–	–	–	–	–	–	–	–	–	–	–
			AA1V	Brown	–	–	–	1	1	–	–	–	–	–	–	–	–	–	–	–	–
ZG	54	67086	AA1A	Black	–	–	–	–	–	1	–	–	–	–	–	–	–	–	–	–	–
			AA2E	Parchment	–	–	–	–	–	1	–	–	–	–	–	–	–	–	–	–	–
			AA2F	Saddle	–	–	–	–	–	1	–	–	–	–	–	–	–	–	–	–	–
			AA1H	White	–	–	–	–	–	1	–	–	–	–	–	–	–	–	–	–	–
			AA1Q	Chamois	–	–	–	–	–	1	–	–	–	–	–	–	–	–	–	–	–

PART NUMBER				COLOUR	BODY TYPE																	
					54							65			66		71			78	
					A	B	C	D	H	E	G	B	D	H	A	B	A	B	D	A	B
-- 67086 -- ARMREST - REAR SEAT BACK - Continued																					
ZG	54	67086	BA1A	Black	-	-	-	-	-	-	1	-	-	-	-	-	-	-	-	-	-
			BA2E	Parchment	-	-	-	-	-	-	1	-	-	-	-	-	-	-	-	-	-
			BA2F	Saddle	-	-	-	-	-	-	1	-	-	-	-	-	-	-	-	-	-
			BA1H	White	-	-	-	-	-	-	1	-	-	-	-	-	-	-	-	-	-
			BA1Q	Chamois	-	-	-	-	-	-	1	-	-	-	-	-	-	-	-	-	-
			BA1V	Brown	-	-	-	-	-	-	1	-	-	-	-	-	-	-	-	-	-
XA	65	67086	AA1A	Black	-	-	-	-	-	-	-	-	1	1	-	-	-	-	-	-	-
			AA2E	Parchment	-	-	-	-	-	-	-	-	1	1	-	-	-	-	-	-	-
			AA2F	Saddle	-	-	-	-	-	-	-	-	1	1	-	-	-	-	-	-	-
			AA1H	White	-	-	-	-	-	-	-	-	1	1	-	-	-	-	-	-	-
			AA1Q	Chamois	-	-	-	-	-	-	-	-	1	1	-	-	-	-	-	-	-
			AA1V	Brown	-	-	-	-	-	-	-	-	1	1	-	-	-	-	-	-	-
-- 672A44 -- COVER ASSY. - ARMREST - REAR SEAT BACK																					
XA	54	672A44	AA1A	Black - to 5/74	-	-	1	-	-	-	-	-	-	-	-	-	-	-	-	-	-
			AA2E	Parchment - to 5/74	-	-	1	-	-	-	-	-	-	-	-	-	-	-	-	-	-
			AA2F	Saddle - to 5/74	-	-	1	-	-	-	-	-	-	-	-	-	-	-	-	-	-
			AA1H	White - to 5/74	-	-	1	-	-	-	-	-	-	-	-	-	-	-	-	-	-
			AA1Q	Chamois - to 5/74	-	-	1	-	-	-	-	-	-	-	-	-	-	-	-	-	-
			AA1V	Brown - to 5/74	-	-	1	-	-	-	-	-	-	-	-	-	-	-	-	-	-
XB	54	672A44	AA1A	Black - from 5/74	-	-	1	-	-	-	-	-	-	-	-	-	-	-	-	-	-
			AA1E	Parchment - from 5/74	-	-	1	-	-	-	-	-	-	-	-	-	-	-	-	-	-
			AA1F	Saddle - from 5/74	-	-	1	-	-	-	-	-	-	-	-	-	-	-	-	-	-
			AA1H	White - from 5/74	-	-	1	-	-	-	-	-	-	-	-	-	-	-	-	-	-
			AA1Q	Chamois - from 5/74	-	-	1	-	-	-	-	-	-	-	-	-	-	-	-	-	-
XA	54	672A44	AA1A	Black	-	-	-	1	1	-	-	-	-	-	-	-	-	-	-	-	-
			AA2E	Parchment	-	-	-	1	1	-	-	-	-	-	-	-	-	-	-	-	-
			AA2F	Saddle	-	-	-	1	1	-	-	-	-	-	-	-	-	-	-	-	-
			AA1H	White	-	-	-	1	1	-	-	-	-	-	-	-	-	-	-	-	-
			AA1Q	Chamois	-	-	-	1	1	-	-	-	-	-	-	-	-	-	-	-	-
			AA1V	Brown	-	-	-	1	1	-	-	-	-	-	-	-	-	-	-	-	-
ZG	54	672A44	AA1A	Black	-	-	-	-	-	1	-	-	-	-	-	-	-	-	-	-	-
			AA2E	Parchment	-	-	-	-	-	1	-	-	-	-	-	-	-	-	-	-	-
			AA2F	Saddle	-	-	-	-	-	1	-	-	-	-	-	-	-	-	-	-	-
			AA1H	White	-	-	-	-	-	1	-	-	-	-	-	-	-	-	-	-	-
			AA1Q	Chamois	-	-	-	-	-	1	-	-	-	-	-	-	-	-	-	-	-
ZG	54	672A44	BA1A	Black	-	-	-	-	-	-	1	-	-	-	-	-	-	-	-	-	-
			BA2E	Parchment	-	-	-	-	-	-	1	-	-	-	-	-	-	-	-	-	-
			BA2F	Saddle	-	-	-	-	-	-	1	-	-	-	-	-	-	-	-	-	-
			BA1H	White	-	-	-	-	-	-	1	-	-	-	-	-	-	-	-	-	-
			BA1Q	Chamois	-	-	-	-	-	-	1	-	-	-	-	-	-	-	-	-	-
			BA1V	Brown	-	-	-	-	-	-	1	-	-	-	-	-	-	-	-	-	-
XA	65	672A44	AA1A	Black	-	-	-	-	-	-	-	-	1	1	-	-	-	-	-	-	-
			AA2E	Parchment	-	-	-	-	-	-	-	-	1	1	-	-	-	-	-	-	-
			AA2F	Saddle	-	-	-	-	-	-	-	-	1	1	-	-	-	-	-	-	-
			AA1H	White	-	-	-	-	-	-	-	-	1	1	-	-	-	-	-	-	-
			AA1Q	Chamois	-	-	-	-	-	-	-	-	1	1	-	-	-	-	-	-	-
			AA1V	Brown	-	-	-	-	-	-	-	-	1	1	-	-	-	-	-	-	-

PART NUMBER				COLOUR	BODY TYPE																	
					54							65			66		71			78	
					A	B	C	D	H	E	G	B	D	H	A	B	A	B	D	A	B
-- 672A44 -- COVER ASSY. - ARMREST - FRONT SEAT BACK																					
XA	54	672A44	AA1A	Black - to 5/74	-	-	1	-	-	1	-	-	-	-	-	-	-	-	-	-	-
			AA3E	Parchment - to 5/74	-	-	1	-	-	1	-	-	-	-	-	-	-	-	-	-	-
			AA3F	Saddle - to 5/74	-	-	1	-	-	1	-	-	-	-	-	-	-	-	-	-	-
			AA1H	White - to 5/74	-	-	1	-	-	1	-	-	-	-	-	-	-	-	-	-	-
			AA1Q	Chamois - to 5/74	-	-	1	-	-	1	-	-	-	-	-	-	-	-	-	-	-
			AA1V	Brown - to 5/74	-	-	1	-	-	1	-	-	-	-	-	-	-	-	-	-	-
XB	54	672A44	BA1A	Black - from 5/74	-	-	1	-	-	1	-	-	-	-	-	-	-	-	-	-	-
			BA1E	Parchment - from 5/74	-	-	1	-	-	1	-	-	-	-	-	-	-	-	-	-	-
			BA1F	Saddle - from 5/74	-	-	1	-	-	1	-	-	-	-	-	-	-	-	-	-	-
			BA1H	White - from 5/74	-	-	1	-	-	1	-	-	-	-	-	-	-	-	-	-	-
			BA1Q	Chamois - from 5/74	-	-	1	-	-	1	-	-	-	-	-	-	-	-	-	-	-
XA	54	672A44	AA1A	Black	-	-	-	1	-	-	1	-	-	-	-	-	-	-	-	-	-
			AA3E	Parchment	-	-	-	1	-	-	1	-	-	-	-	-	-	-	-	-	-
			AA3F	Saddle	-	-	-	1	-	-	1	-	-	-	-	-	-	-	-	-	-
			AA1H	White	-	-	-	1	-	-	1	-	-	-	-	-	-	-	-	-	-
			AA1Q	Chamois	-	-	-	1	-	-	1	-	-	-	-	-	-	-	-	-	-
			AA1V	Brown	-	-	-	1	-	-	1	-	-	-	-	-	-	-	-	-	-
-- 67260 -- ARMREST - FRONT SEAT BACK																					
XA	54	67260	AB1A	Black - to 5/74	-	-	1	-	-	1	-	-	-	-	-	-	-	-	-	-	-
			AB2F	Parchment - to 5/74	-	-	1	-	-	1	-	-	-	-	-	-	-	-	-	-	-
			AB2F	Saddle - to 5/74	-	-	1	-	-	1	-	-	-	-	-	-	-	-	-	-	-
			AB1H	White - to 5/74	-	-	1	-	-	1	-	-	-	-	-	-	-	-	-	-	-
			AB1Q	Chamois - to 5/74	-	-	1	-	-	1	-	-	-	-	-	-	-	-	-	-	-
XB	54	67260	AA1A	Black - from 5/74	-	-	1	-	-	1	-	-	-	-	-	-	-	-	-	-	-
			AA1E	Parchment - from 5/74	-	-	1	-	-	1	-	-	-	-	-	-	-	-	-	-	-
			AA1F	Saddle - from 5/74	-	-	1	-	-	1	-	-	-	-	-	-	-	-	-	-	-
			AA1H	White - from 5/74	-	-	1	-	-	1	-	-	-	-	-	-	-	-	-	-	-
			AA1Q	Chamois - from 5/74	-	-	1	-	-	1	-	-	-	-	-	-	-	-	-	-	-
XAA	54	67260	AA1A	Black	-	-	-	1	-	-	1	-	-	-	-	-	-	-	1	-	-
			AA2E	Parchment	-	-	-	1	-	-	1	-	-	-	-	-	-	-	1	-	-
			AA2F	Saddle	-	-	-	1	-	-	1	-	-	-	-	-	-	-	1	-	-
			AA1H	White	-	-	-	1	-	-	1	-	-	-	-	-	-	-	1	-	-
			AA1Q	Chamois	-	-	-	1	-	-	1	-	-	-	-	-	-	-	1	-	-
			AA1V	Brown	-	-	-	1	-	-	1	-	-	-	-	-	-	-	1	-	-
XB 'Sovereign'	54	67260	LA1E	Parchment	-	1	-	-	-	-	-	-	-	-	-	-	-	1	-	-	-
			LA1F	Saddle	-	1	-	-	-	-	-	-	-	-	-	-	-	1	-	-	-
			LA1Q	Chamois	-	1	-	-	-	-	-	-	-	-	-	-	-	1	-	-	-

PART NUMBER	COLOUR	BODY TYPE																	
		54							65			66		71			78		
		A	B	C	D	H	E	G	B	D	H	A	B	A	B	D	A	B	

– – TRIM MATERIAL

Refer Soft Trim Seat Catalogue – Cat. 133

– – SEAT INSERT

Refer Soft Trim Seat Catalogue – Cat. 133

– – SEAT FACING

Refer Soft Trim Seat Catalogue – Cat. 133

– – SEAT SURROUND

Refer Soft Trim Seat Catalogue – Cat. 133

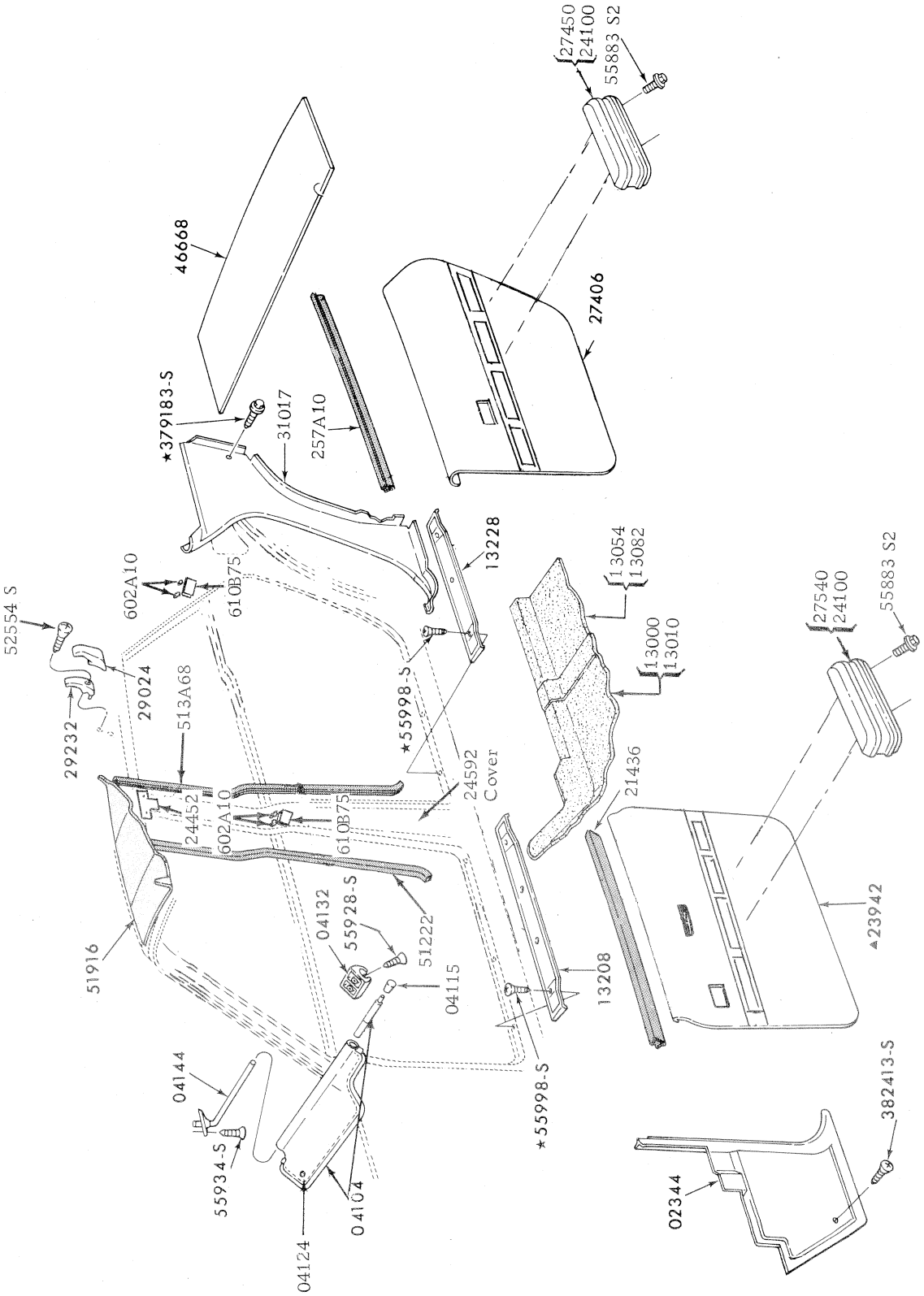

INTERIOR TRIM AND RELATED PARTS BODY TYPE 54

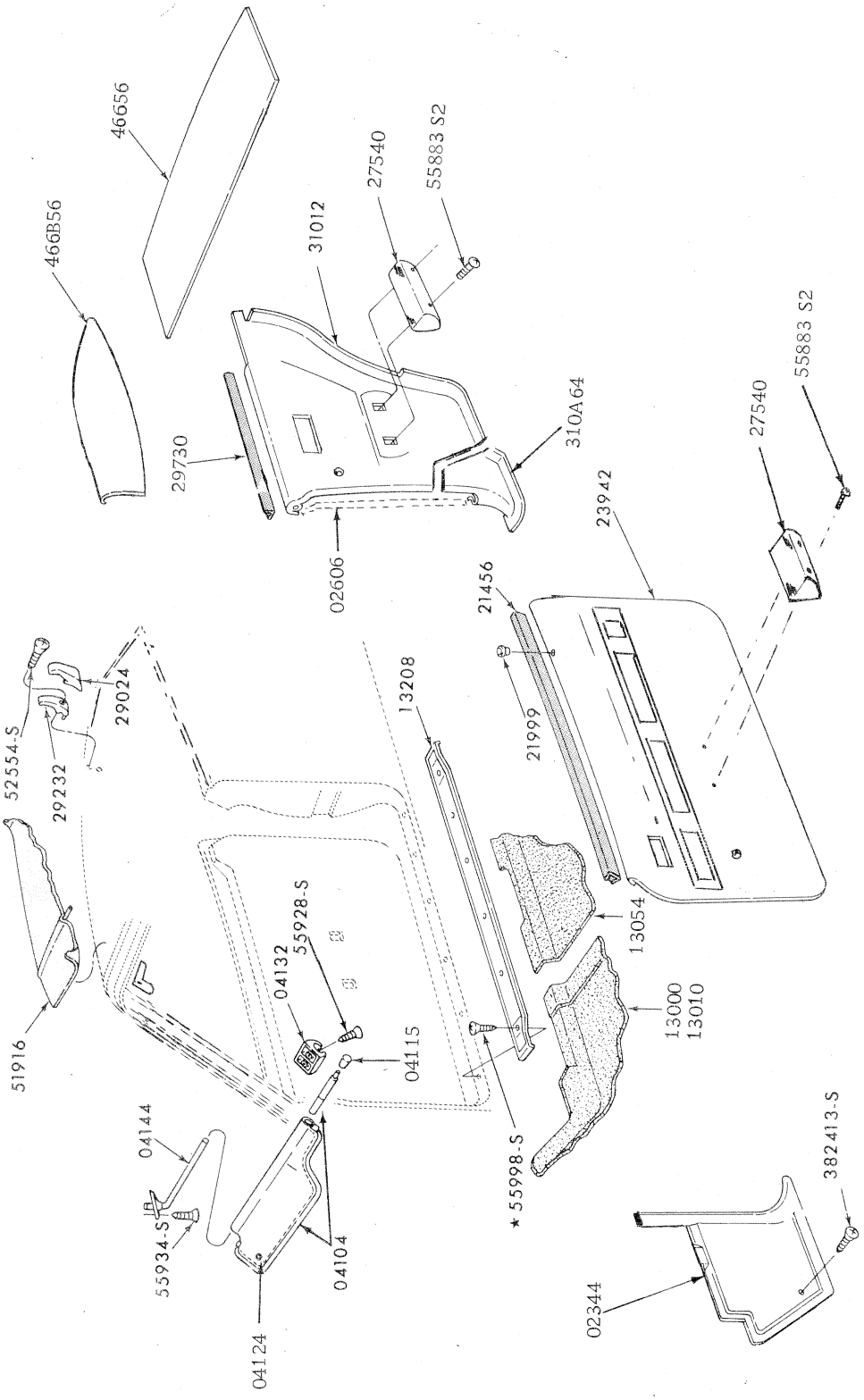

INTERIOR TRIM AND RELATED PARTS BODY TYPE 65

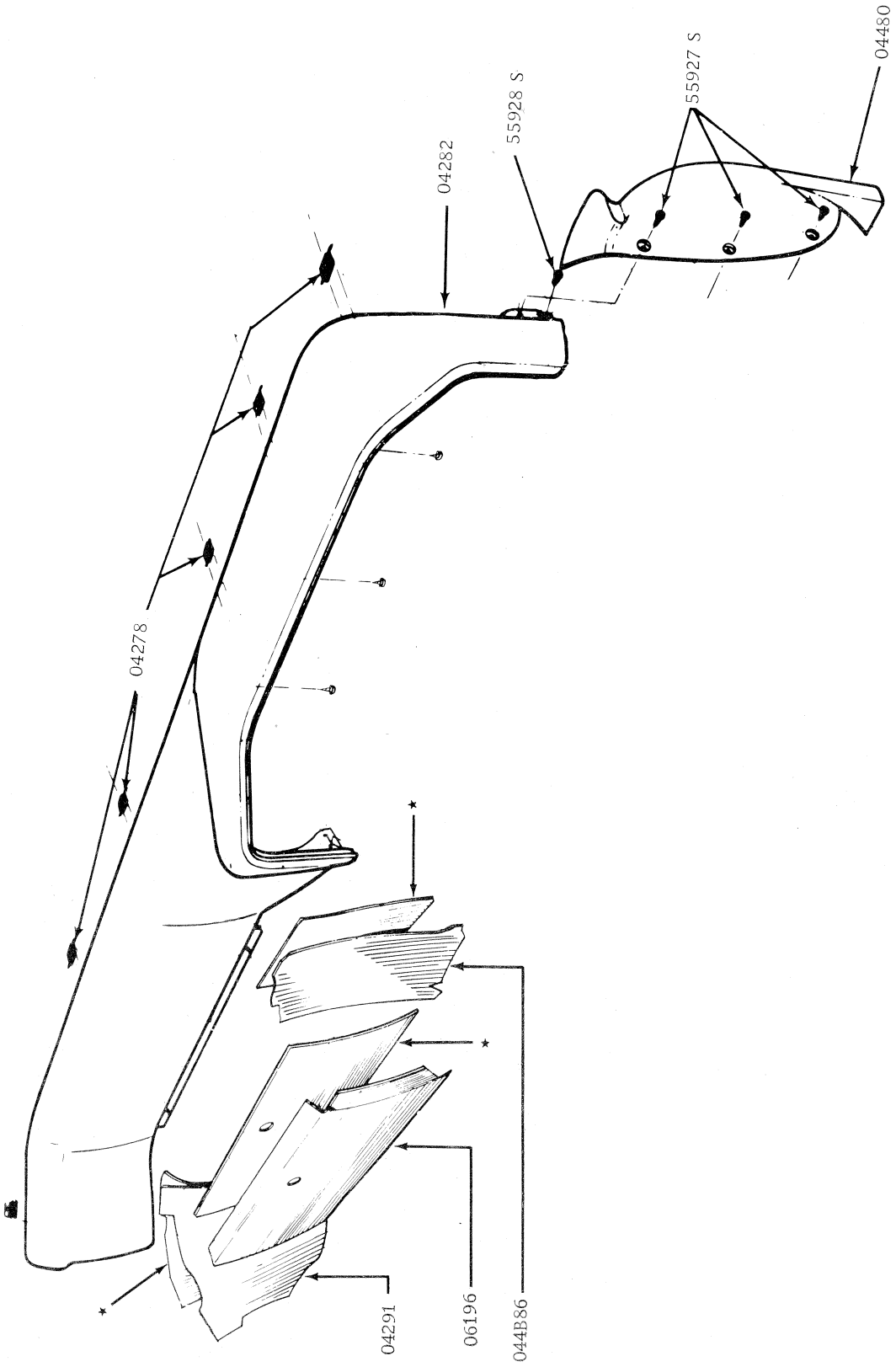

INSTRUMENT PAD & RELATED PARTS

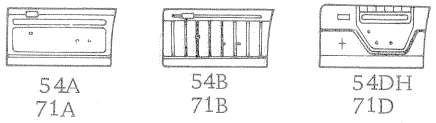
54A
71A

54B
71B

54DH
71D

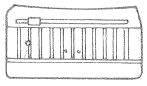
65B
66B

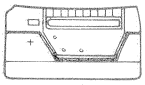
65DH


66A
78A

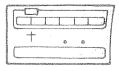
54CE

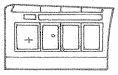
54G

Ø REFER BODY SECTION

T01 05 8

FRONT DOOR TRIM PANELS

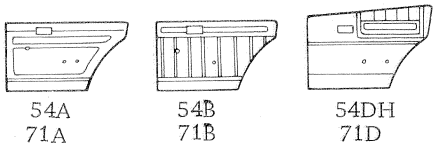
54A
71A

54B
71B

54DH
71D

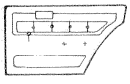
54CE

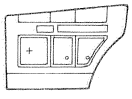
54G

Ø REFER BODY SECTION

T01 05 2

REAR DOOR TRIM PANELS

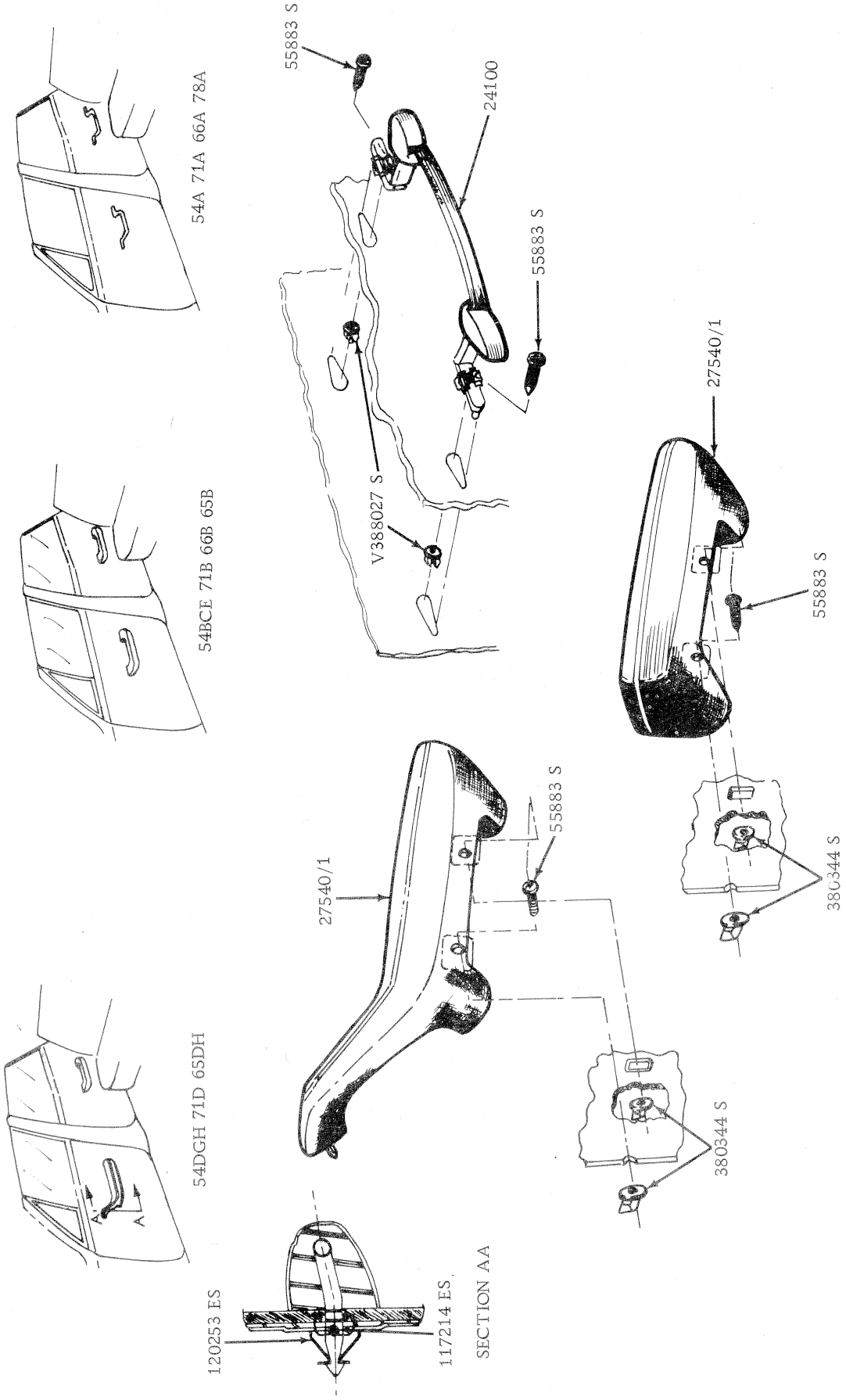

FRONT & REAR DOOR ARMREST

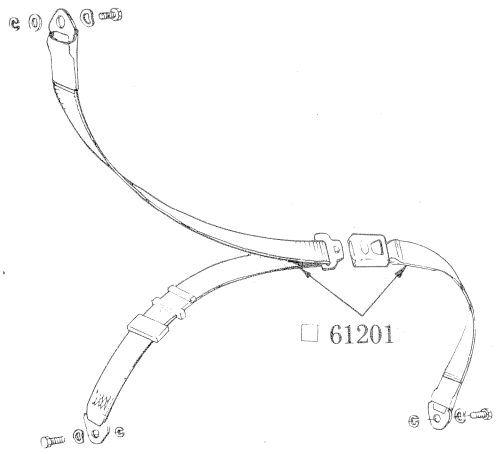

Front Seat-Bench

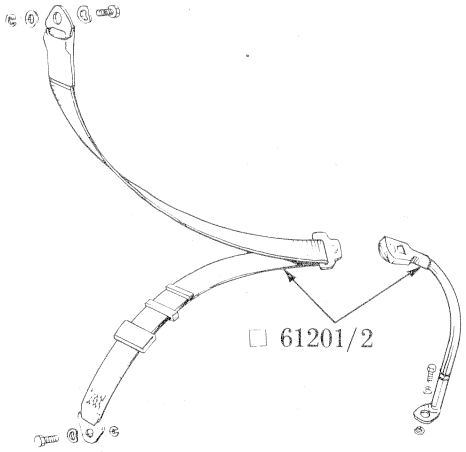

Front Seat-Bucket

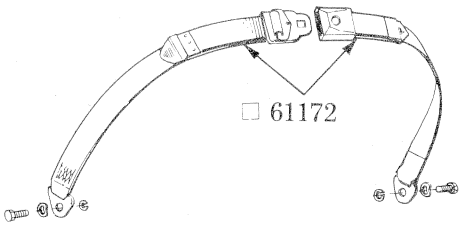

Front Seat-Bench

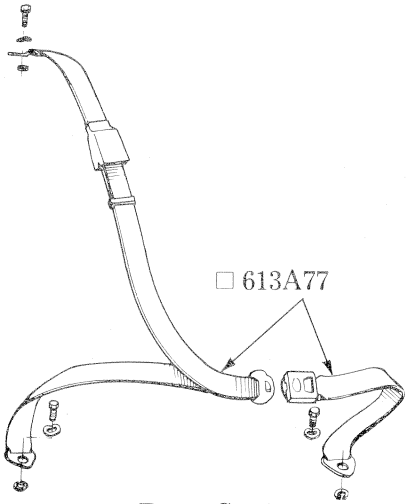

Rear Seat

□ Also includes attaching Hardware

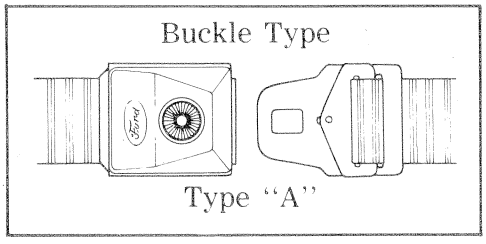

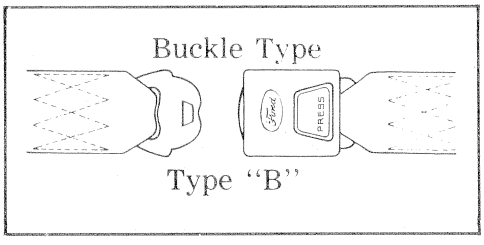

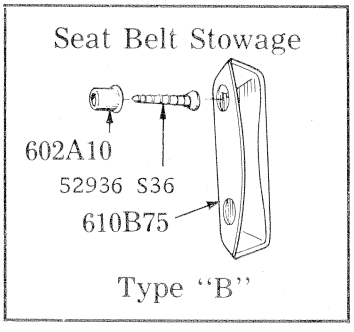

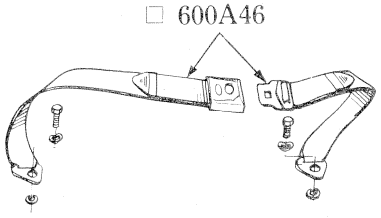

Rear Seat

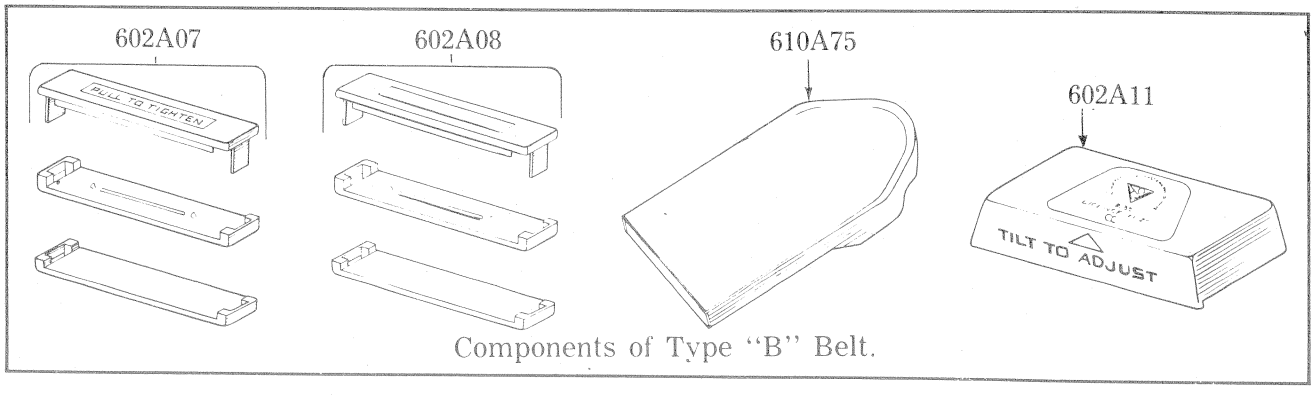

Components of Type "B" Belt.

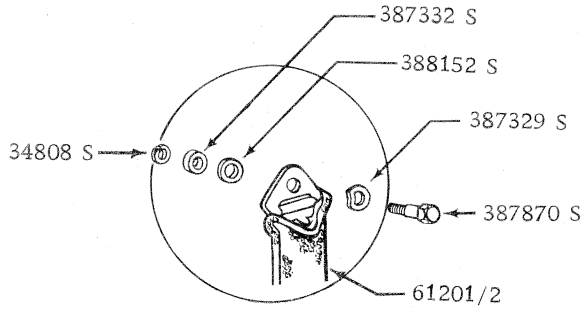

AA

BODY TYPE 65

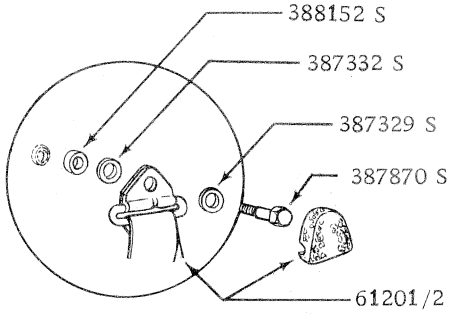

AA

EXCEPT BODY TYPE 65

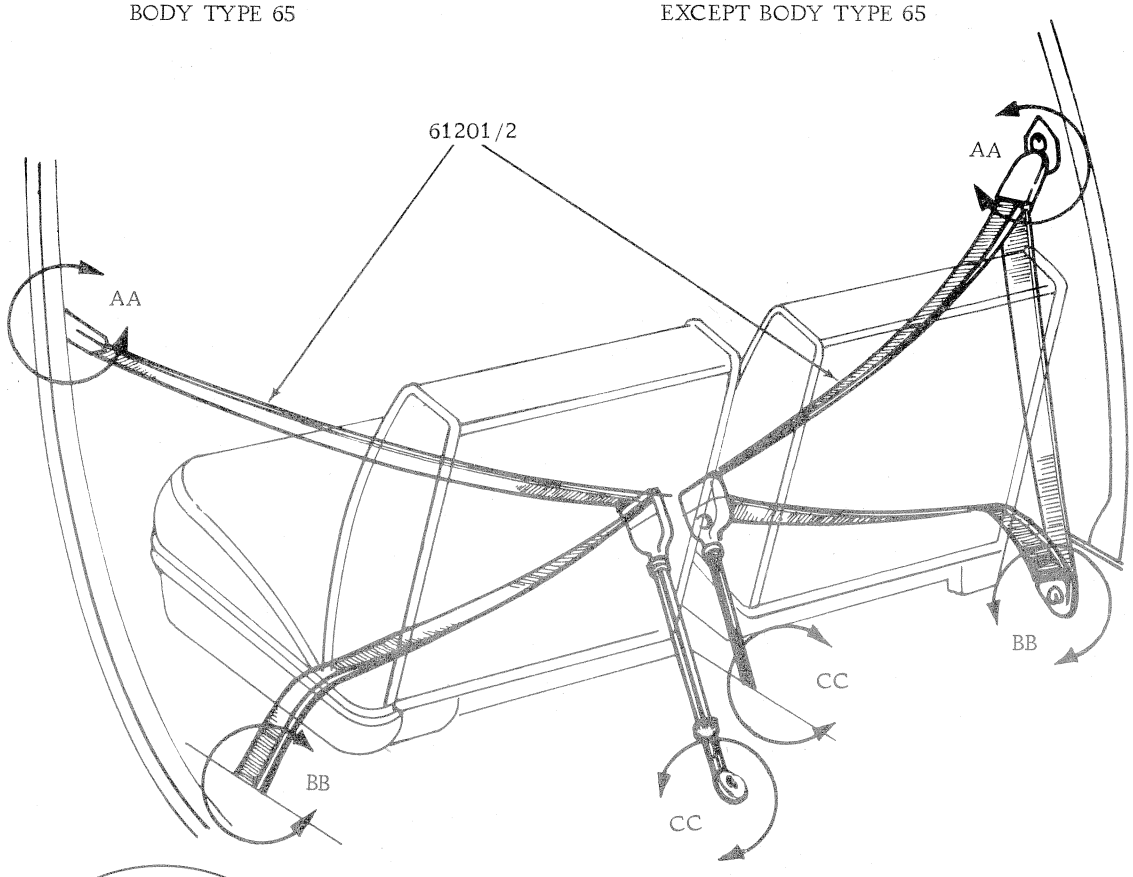

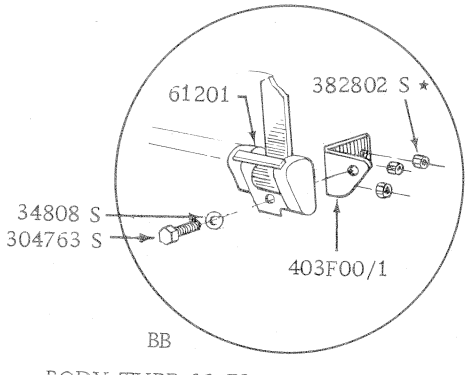

BODY TYPE 66, 78

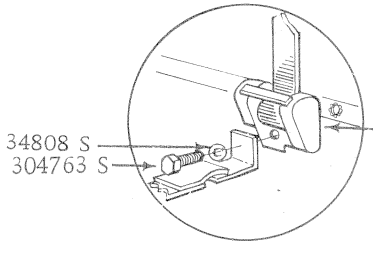

BB

BODY TYPE 54, 65, 71

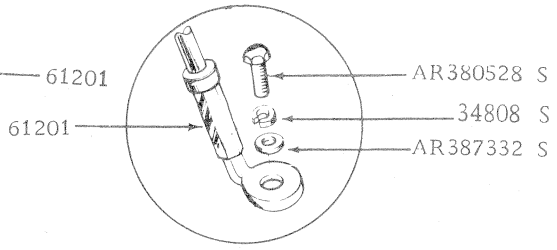

CC

SEAT BELTS AND RELATED PARTS – XB/ZG

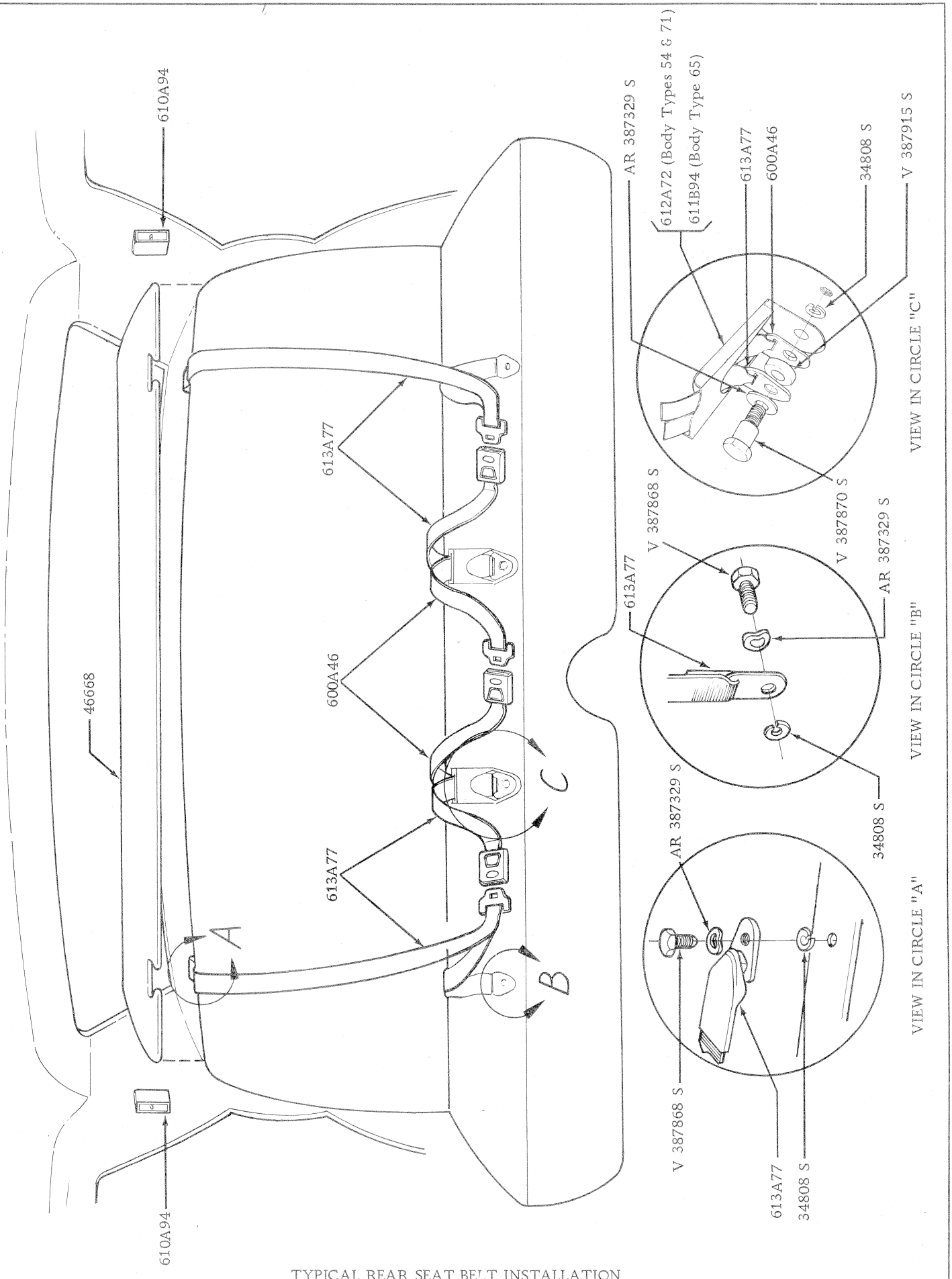

TYPICAL REAR SEAT BELT INSTALLATION

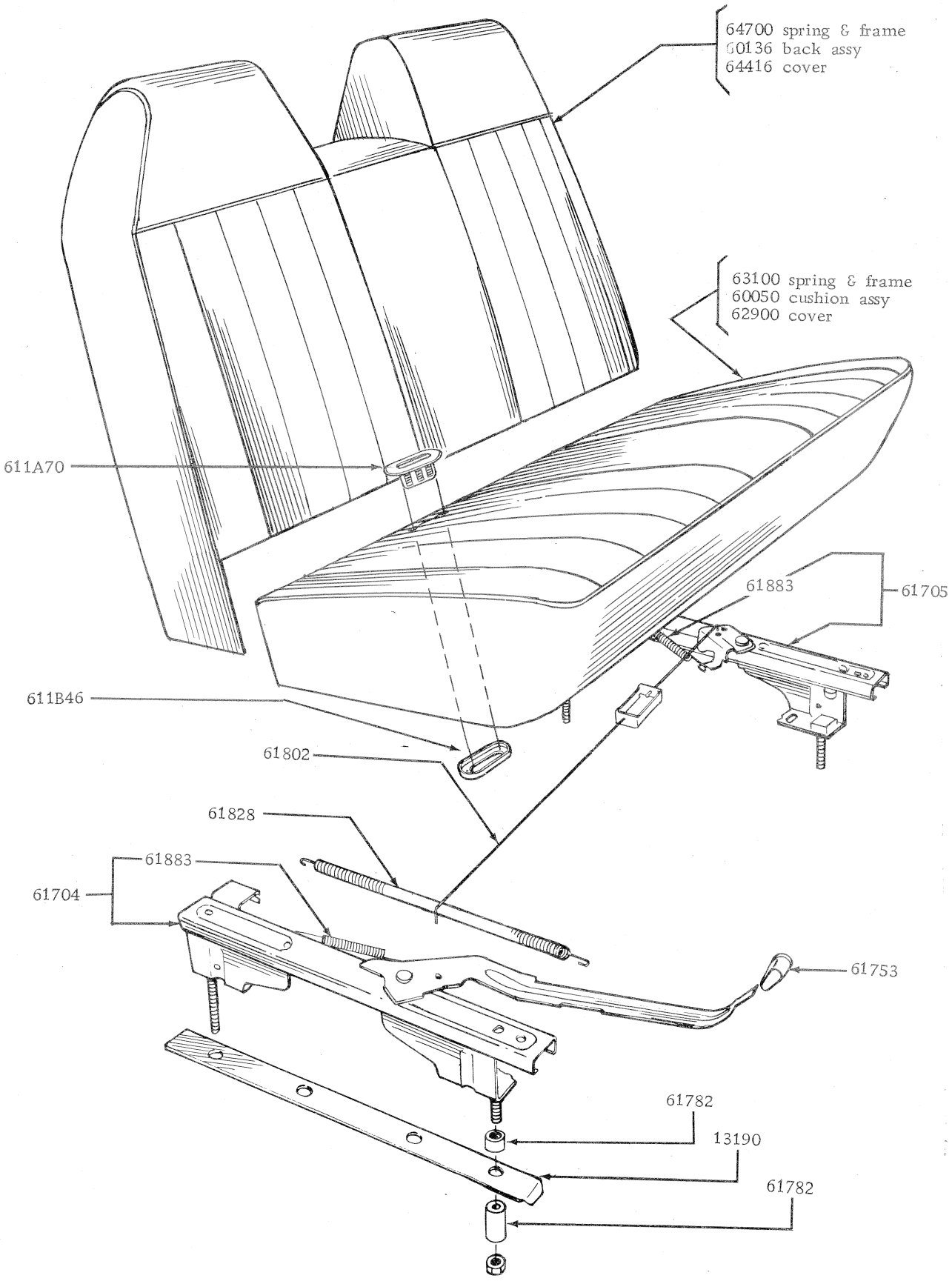

SEAT ASSY FRONT - BENCH TYPE

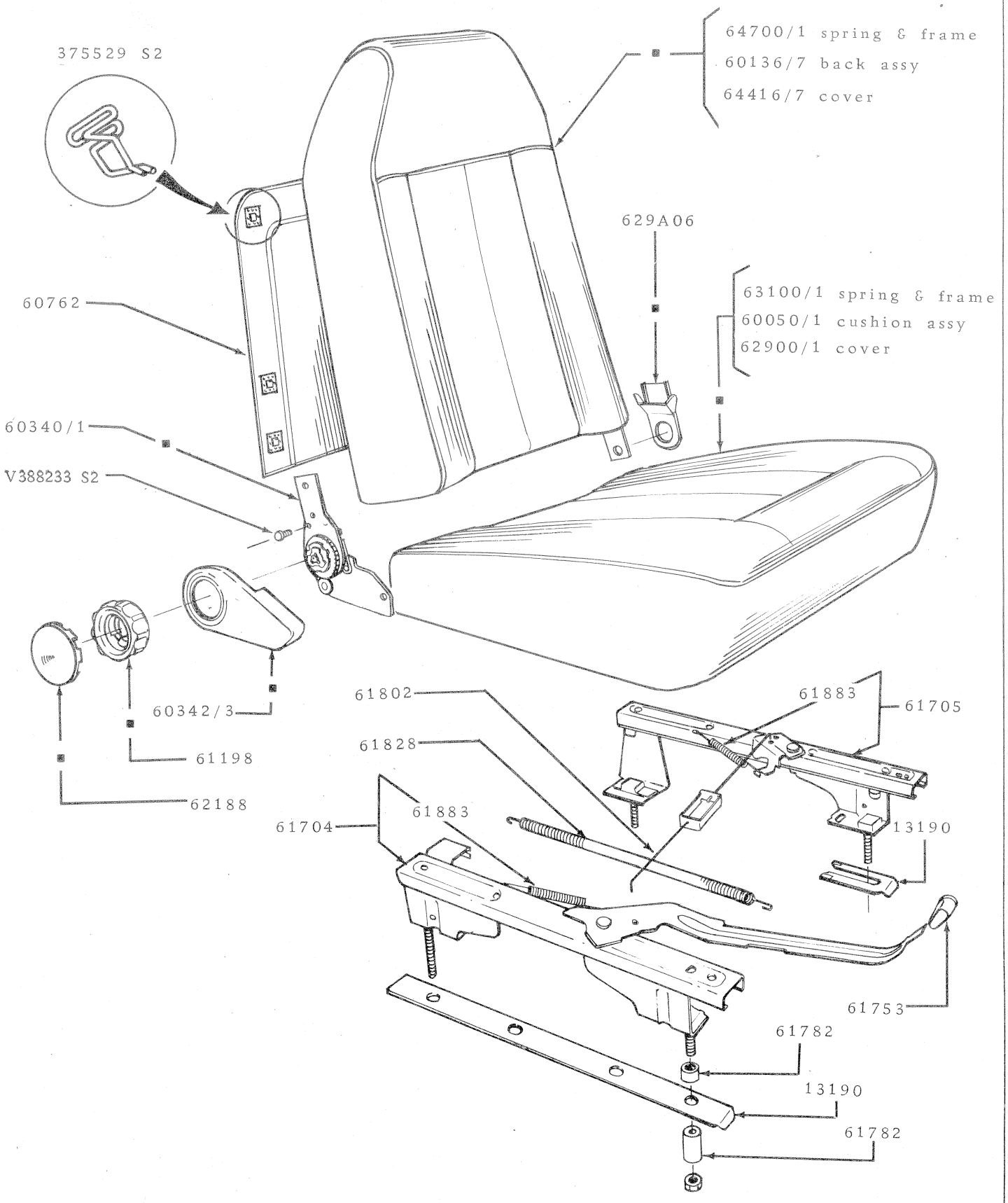

■ PART OF 60004/5 ASSY

SEAT ASSEMBLY FRONT - BUCKET TYPE

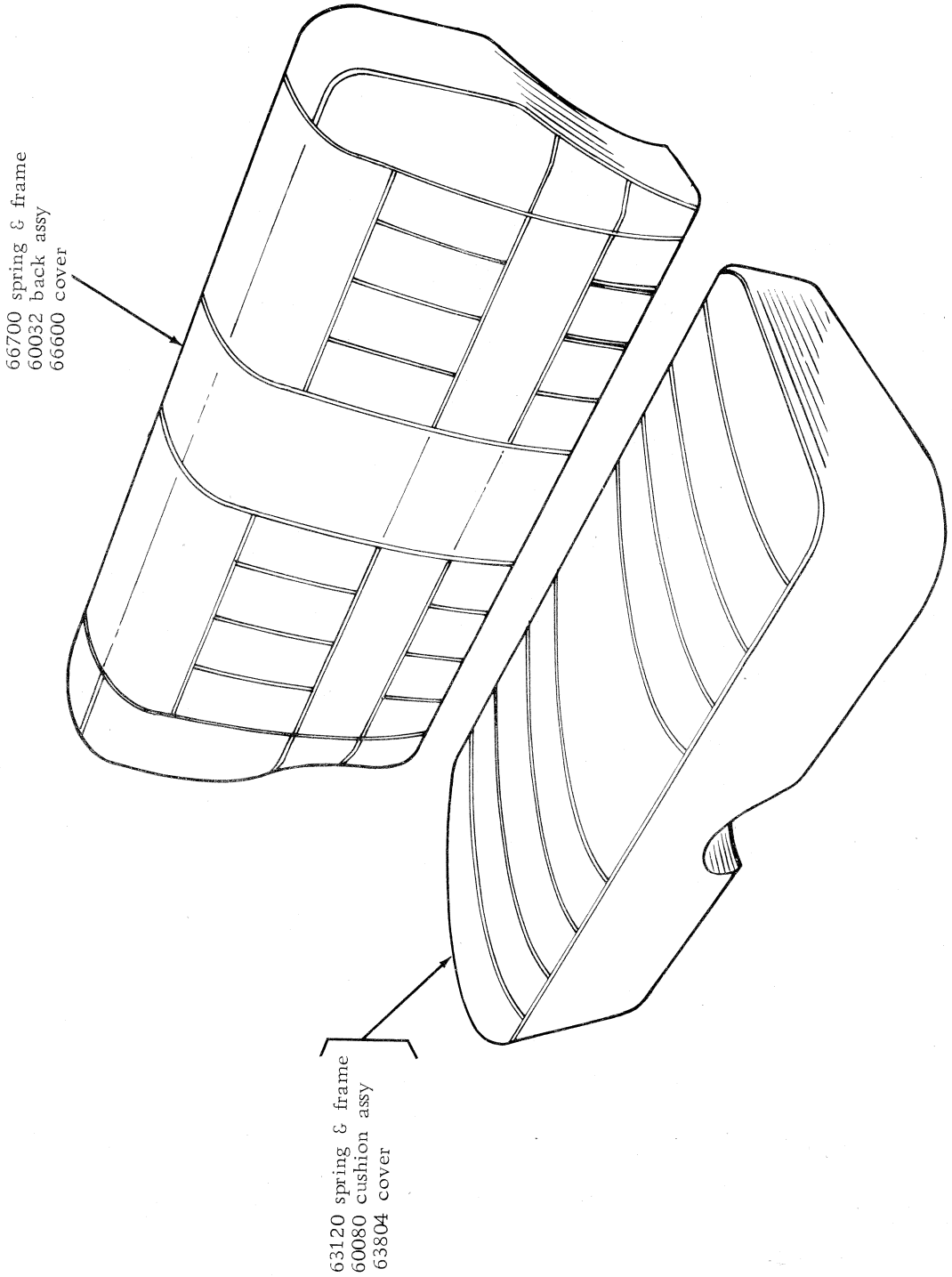

SEAT ASSY REAR - SEDAN

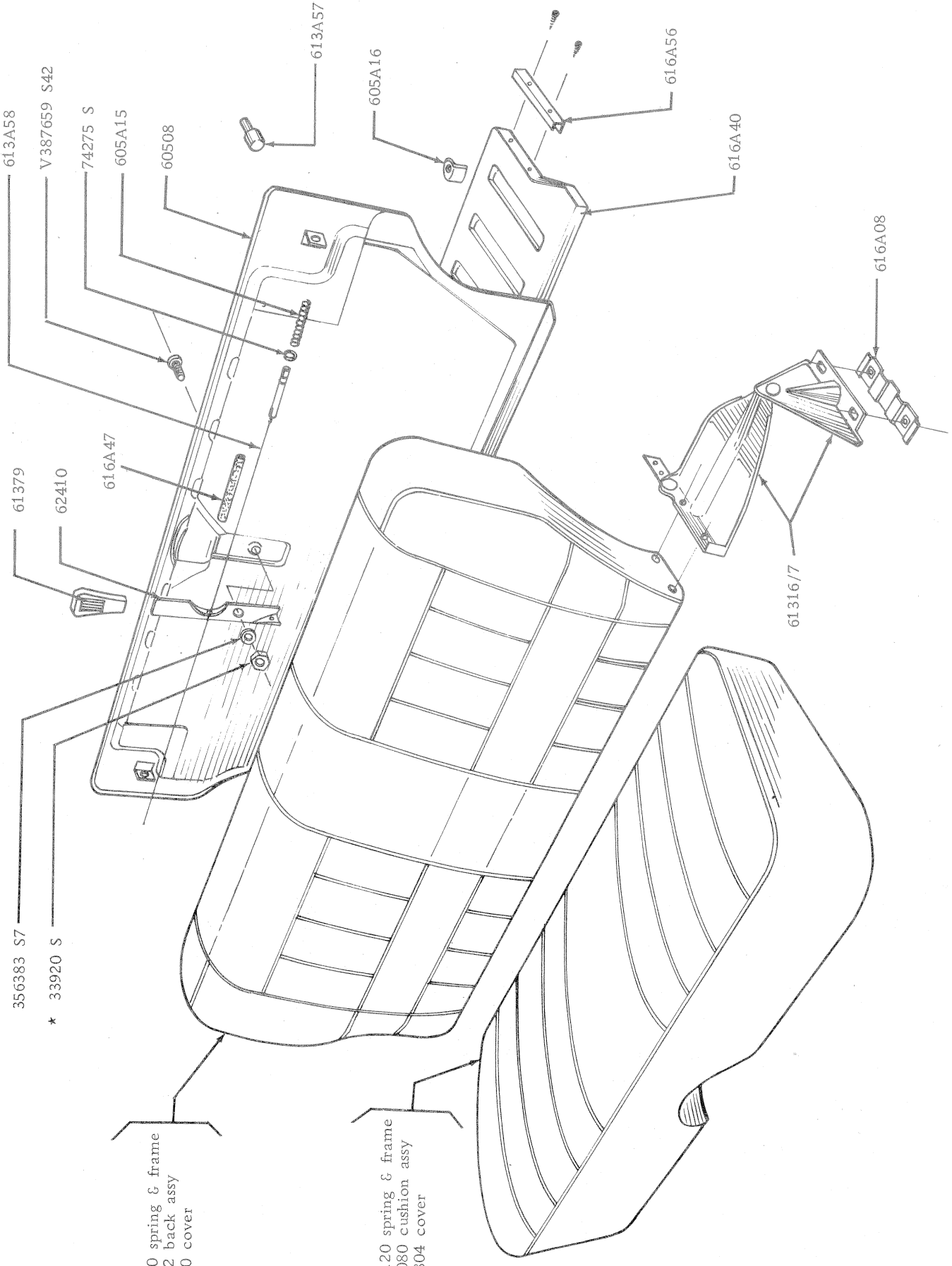

SEAT ASSY REAR - WAGON

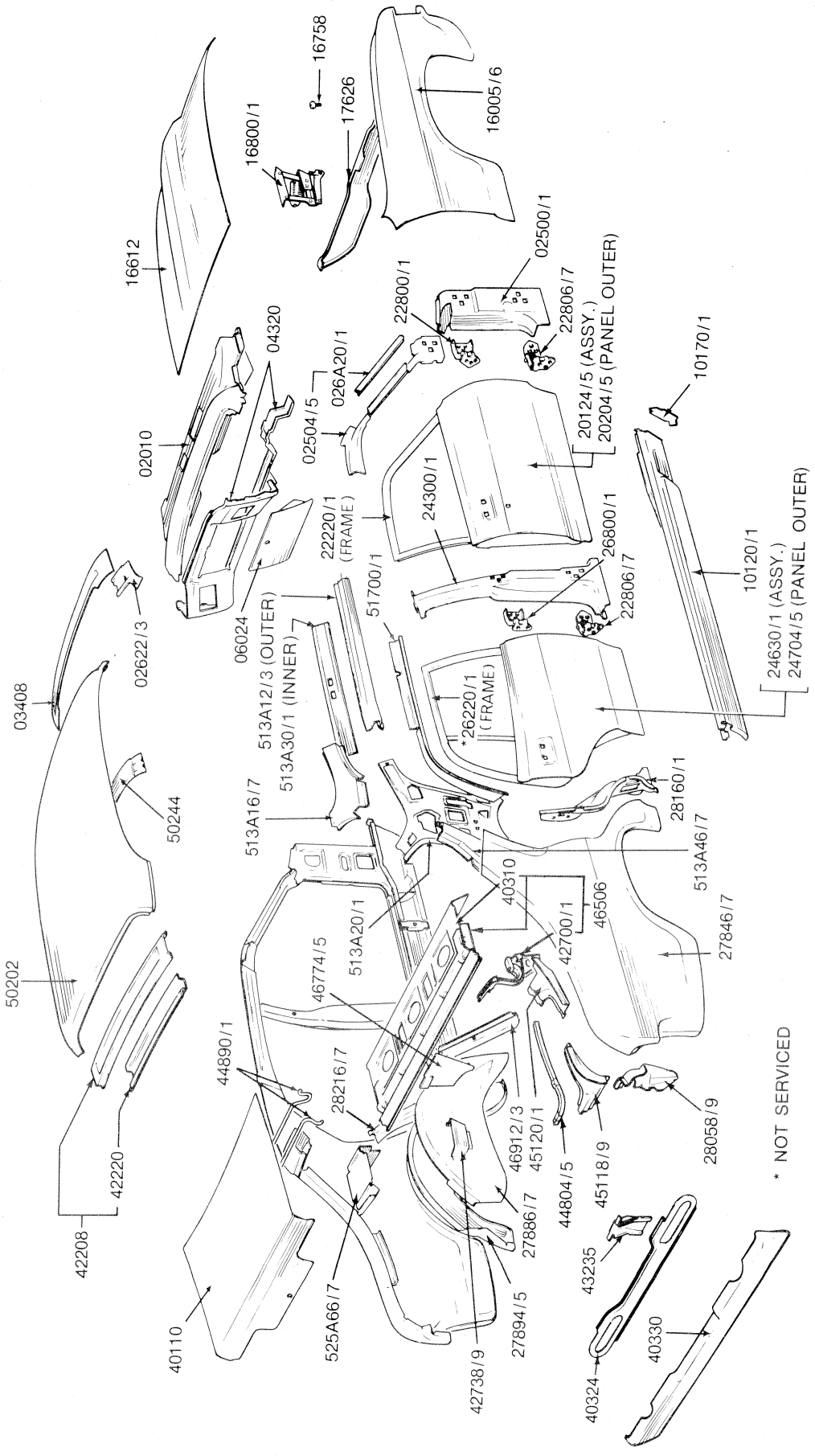
16758
17626
16005/6
16800/1
16612
02500/1
22800/1
22806/7
20124/5 (ASSY.)
20204/5 (PANEL OUTER)
04320
026A20/1
02504/5
02010
10170/1
24300/1
22220/1 (FRAME)
26800/1
22806/7
51700/1
06024
513A12/3 (OUTER)
513A30/1 (INNER)
10120/1
24630/1 (ASSY.)
24704/5 (PANEL OUTER)
02622/3
03408
*26220/1 (FRAME)
50244
513A16/7
28160/1
513A46/7
40310
46506
27846/7
513A20/1
42700/1
50202
46774/5
44890/1
28216/7
46912/3
45120/1
28058/9
44804/5
45118/9
42220
42208
27886/7
43235
40110
525A66/7
27894/5
42738/9
40330
40324
* NOT SERVICED

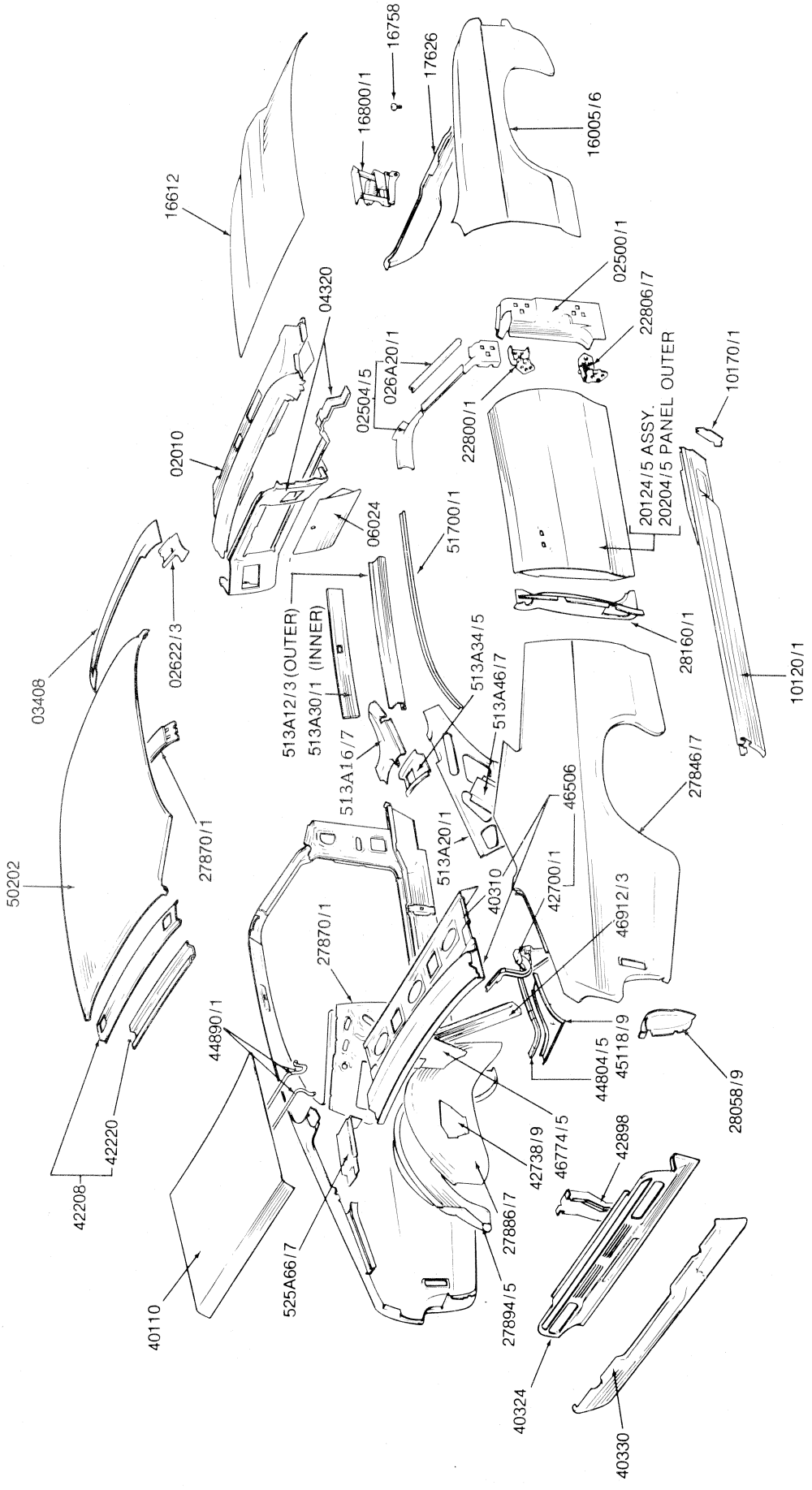

SHEET METAL - EXTERIOR BODY

XA/B – BODY TYPE 65

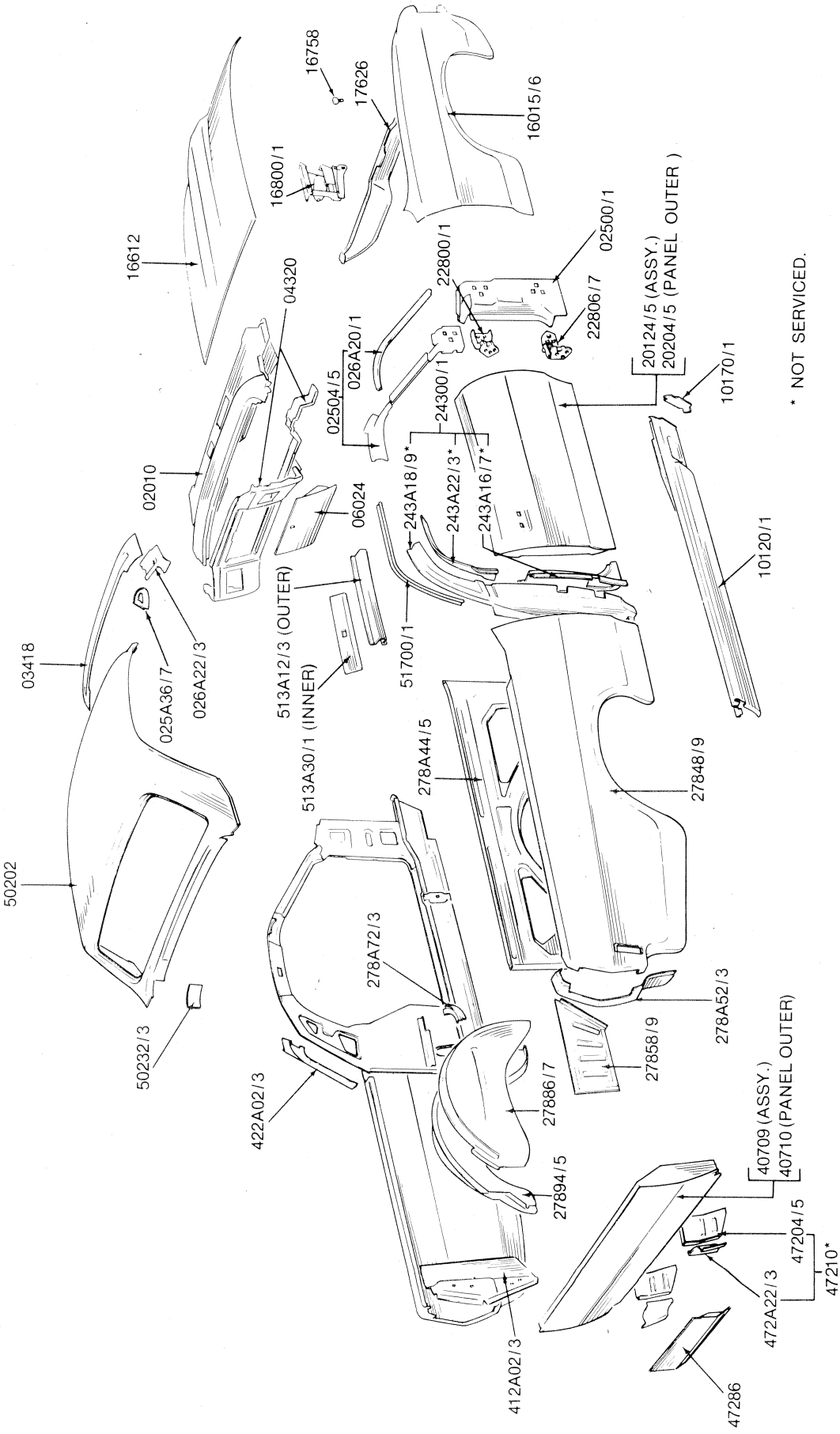

SHEET METAL - EXTERIOR BODY

XA/B – BODY TYPE 66

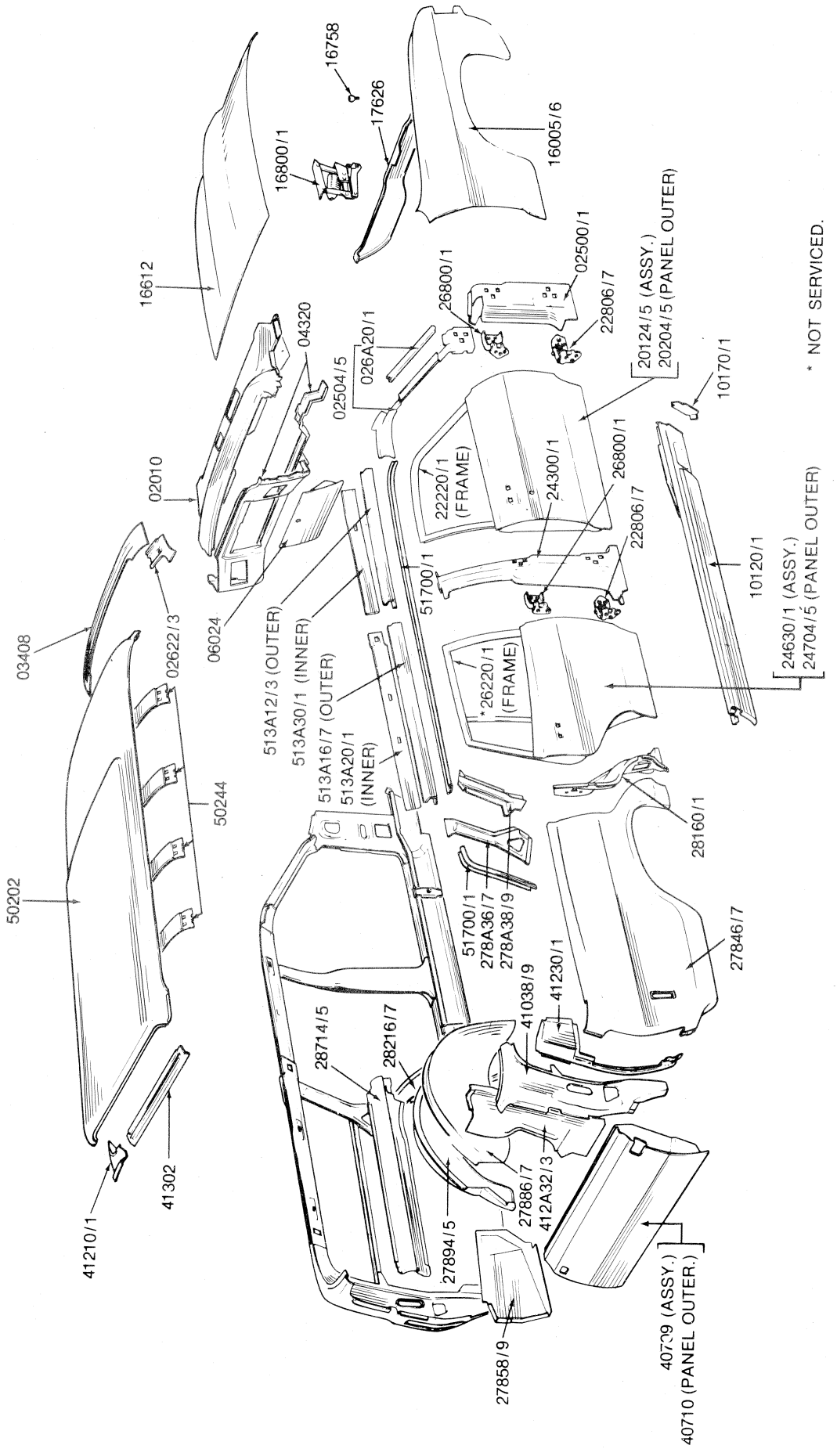

SHEET METAL - EXTERIOR BODY

XA/B BODY TYPE 71

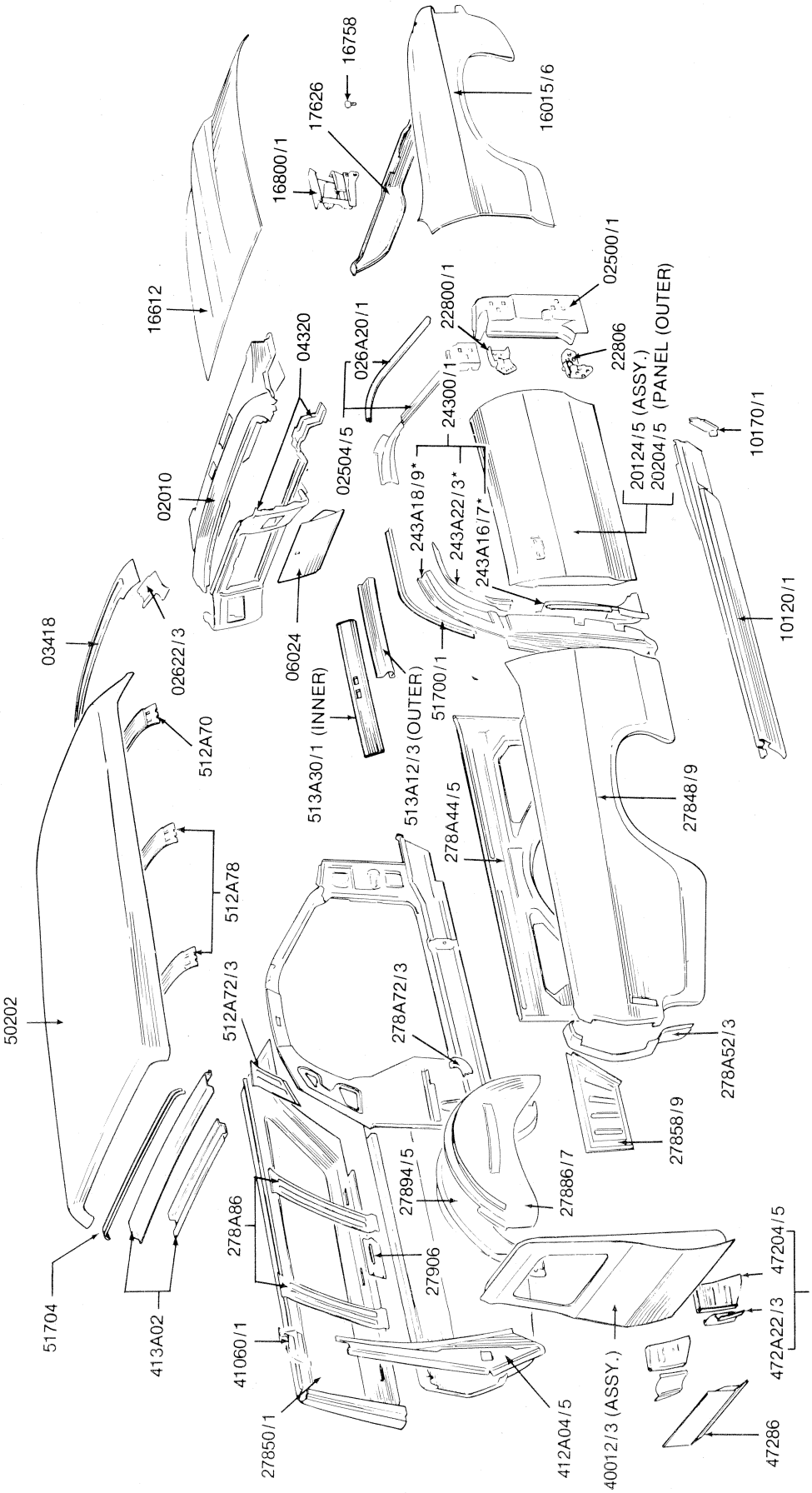

SHEET METAL - EXTERIOR BODY

XA/B – BODY TYPE 78

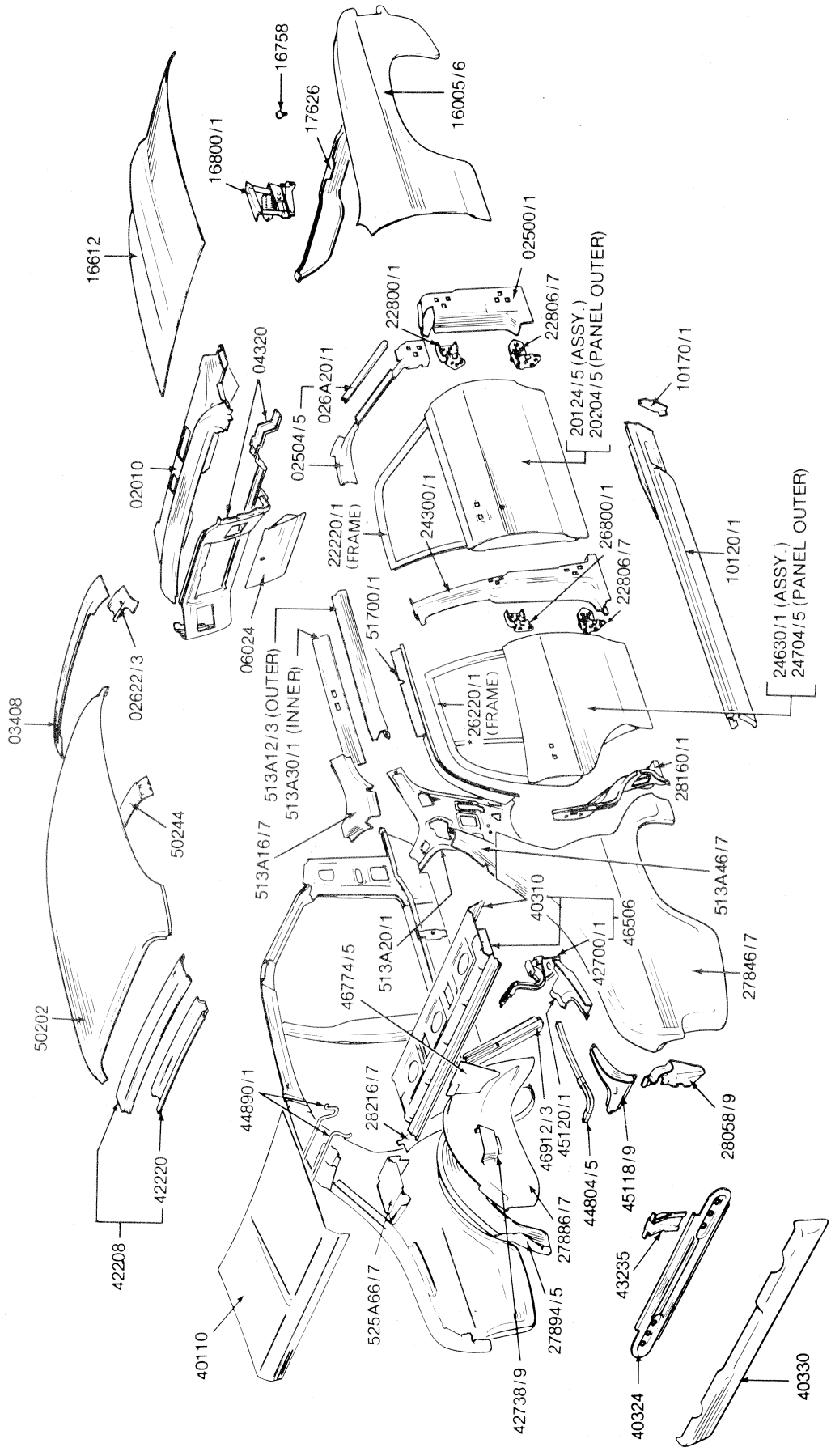

* NOT SERVICED.

SHEET METAL - EXTERIOR BODY

ZF/G – BODY TYPE 54

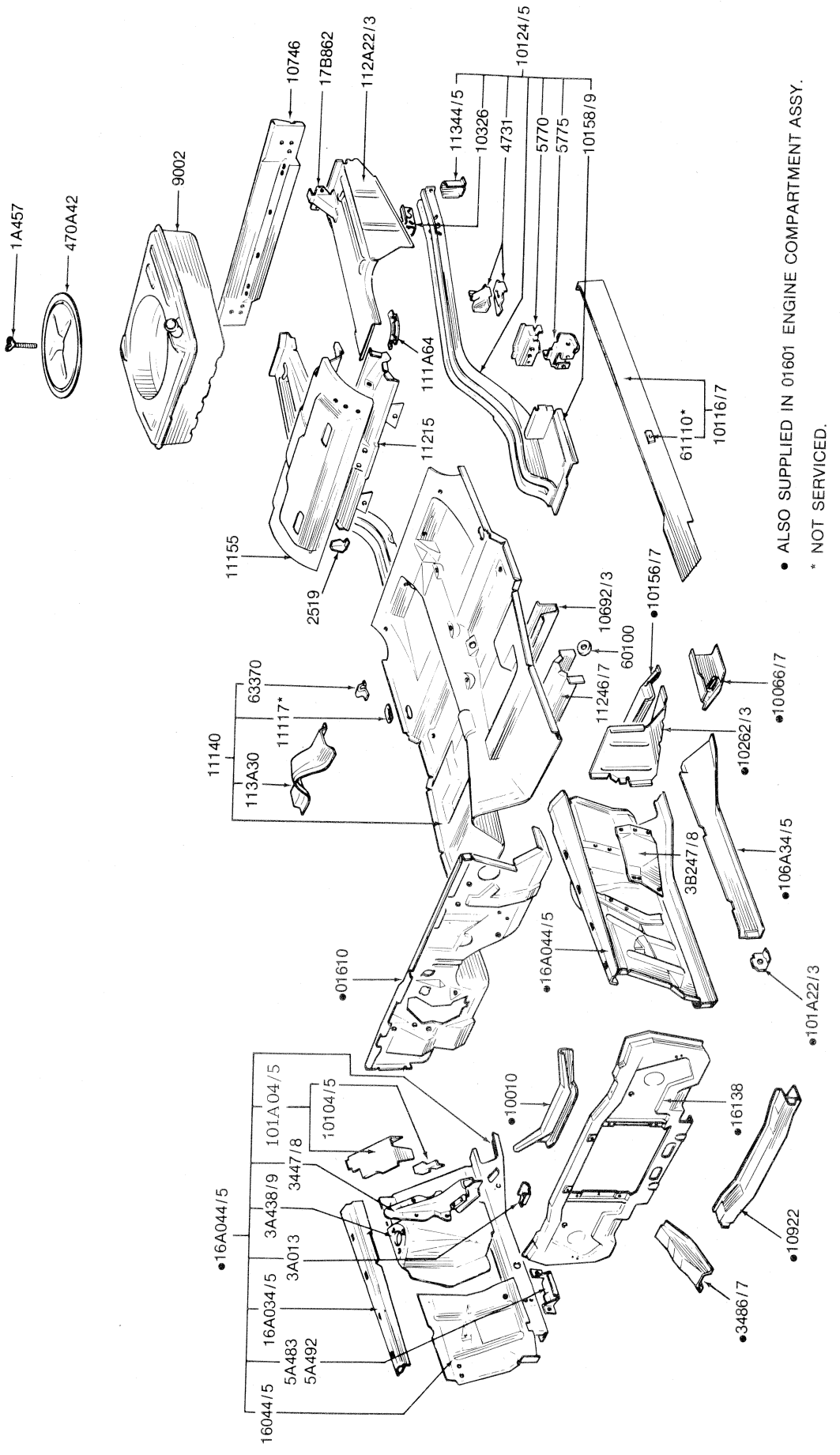

SHEET METAL - UNDER BODY

XA/B – BODY TYPE 54/65

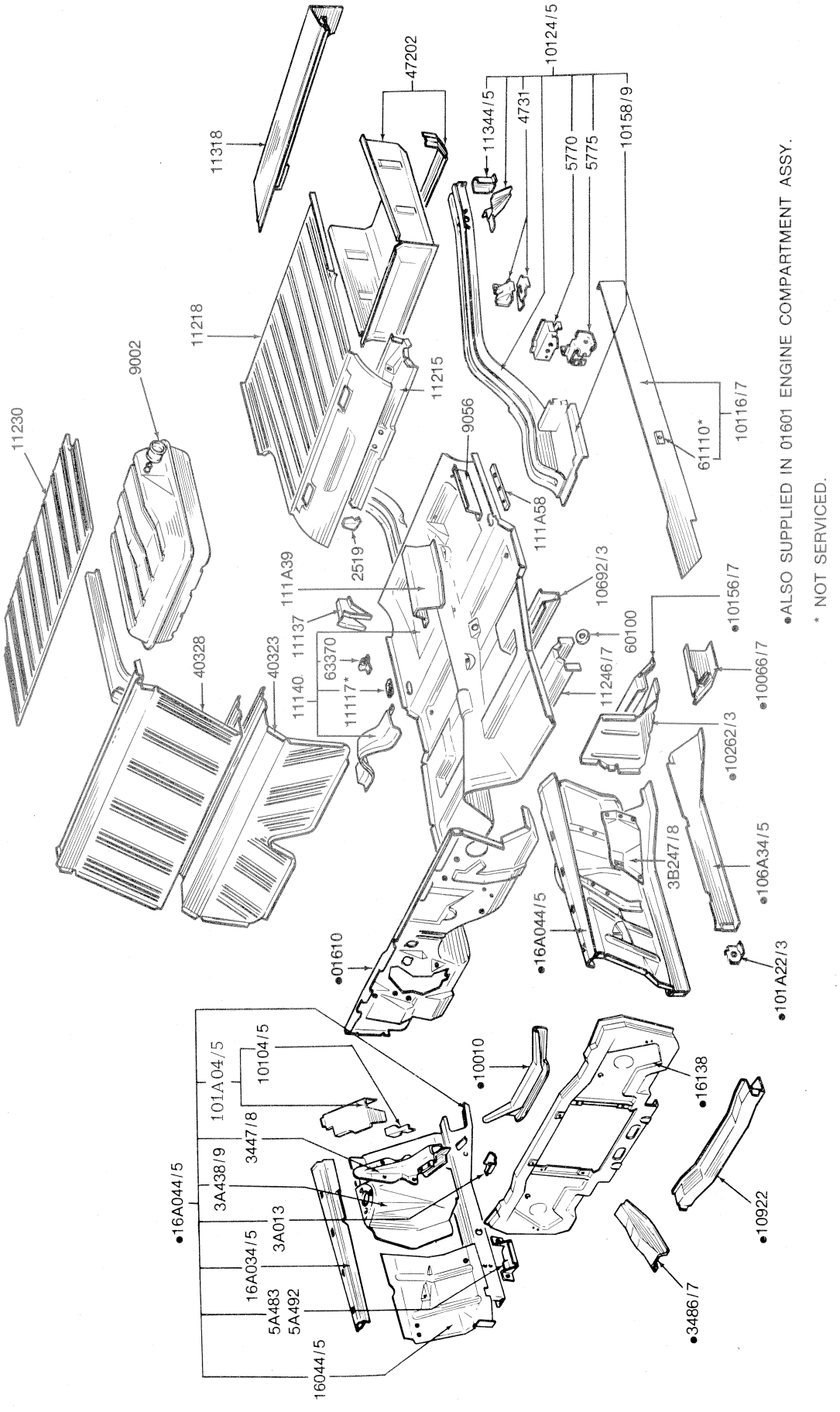

SHEET METAL - UNDER BODY

XA/B – BODY TYPE 66/78

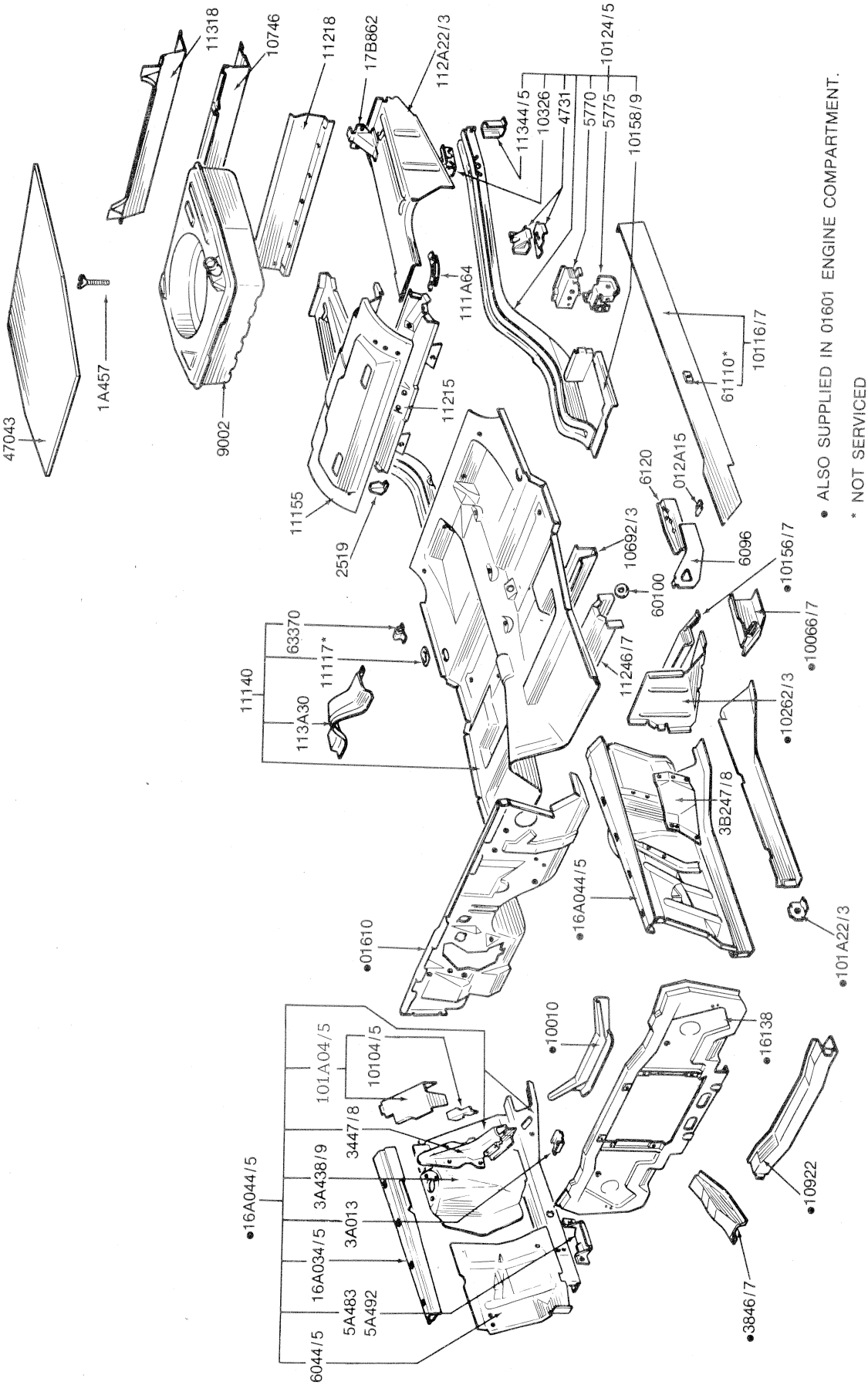

SHEET METAL - UNDER BODY

XA/B – BODY TYPE 71

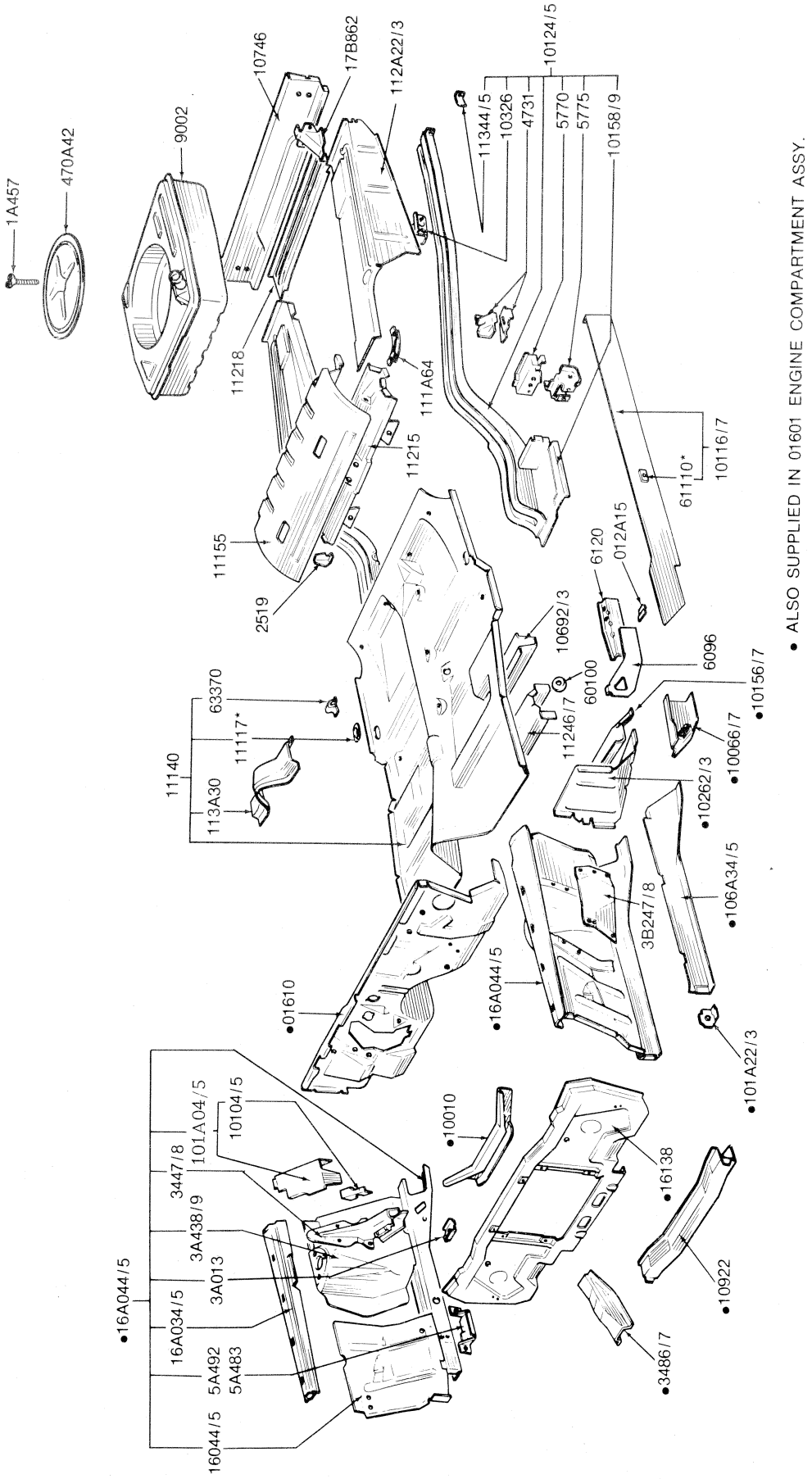

SHEET METAL - UNDER BODY

ZF/G – BODY TYPE 54

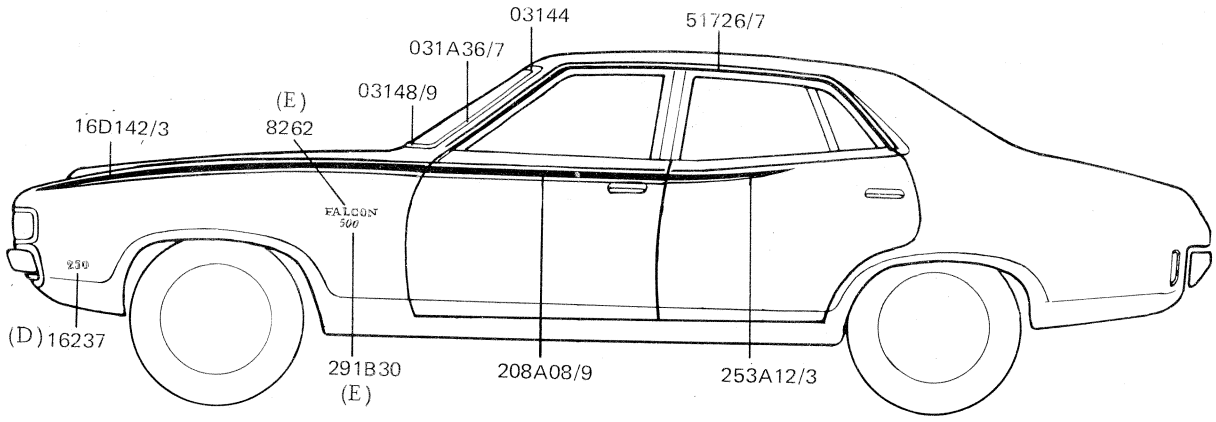

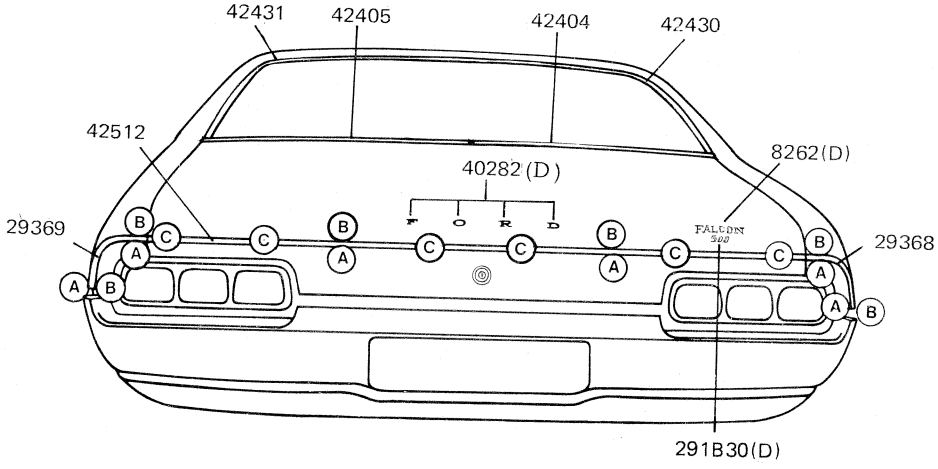

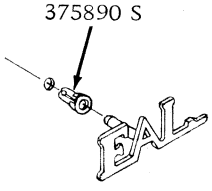

(E)

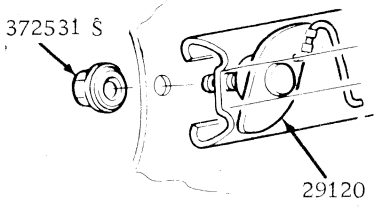

(AB)

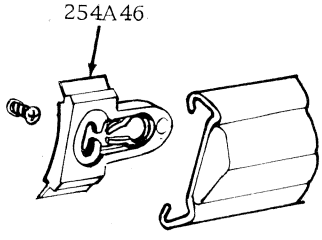

(C)

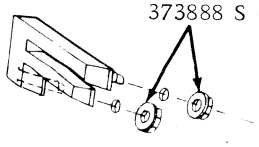

(D)

EXTERIOR ORNAMENTATION - XA FALCON 500 (54B) & RALLY PACK

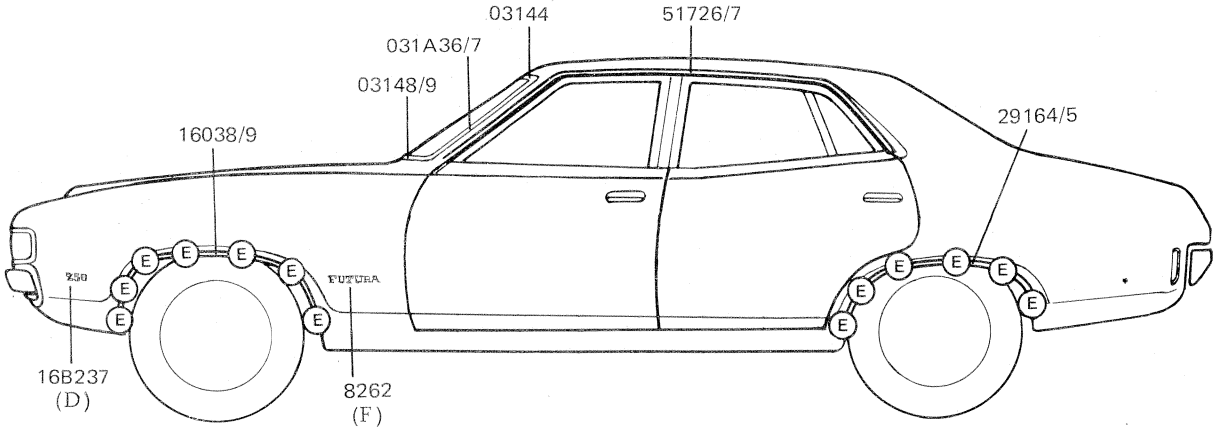

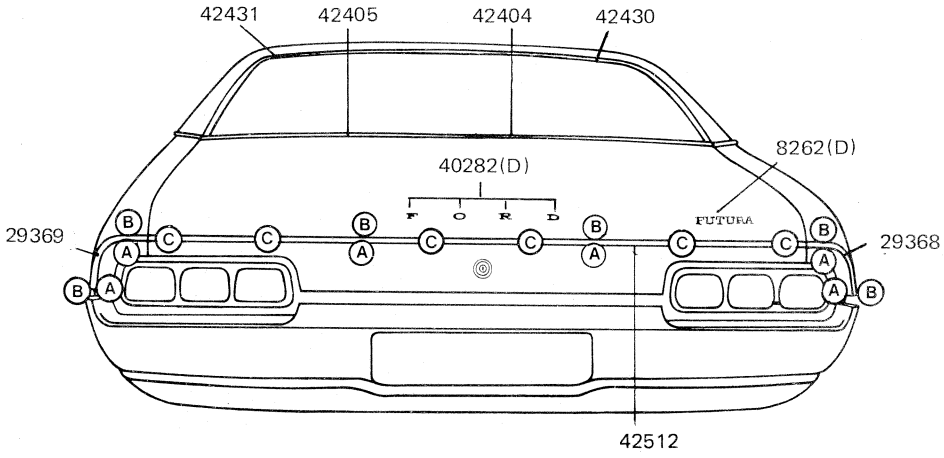

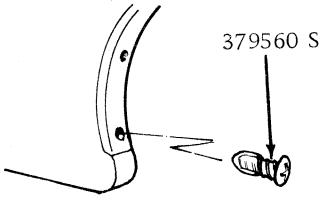

(E)

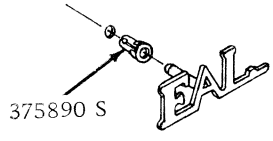

(F)

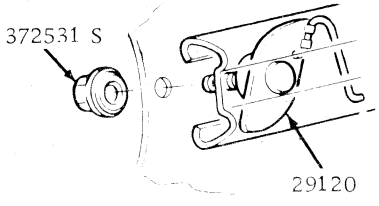

(AB)

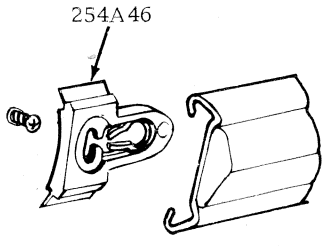

(C)

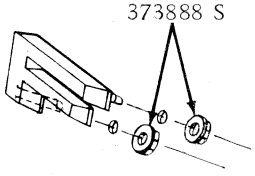

(D)

EXTERIOR ORNAMENTATION - XA FUTURA (54C)

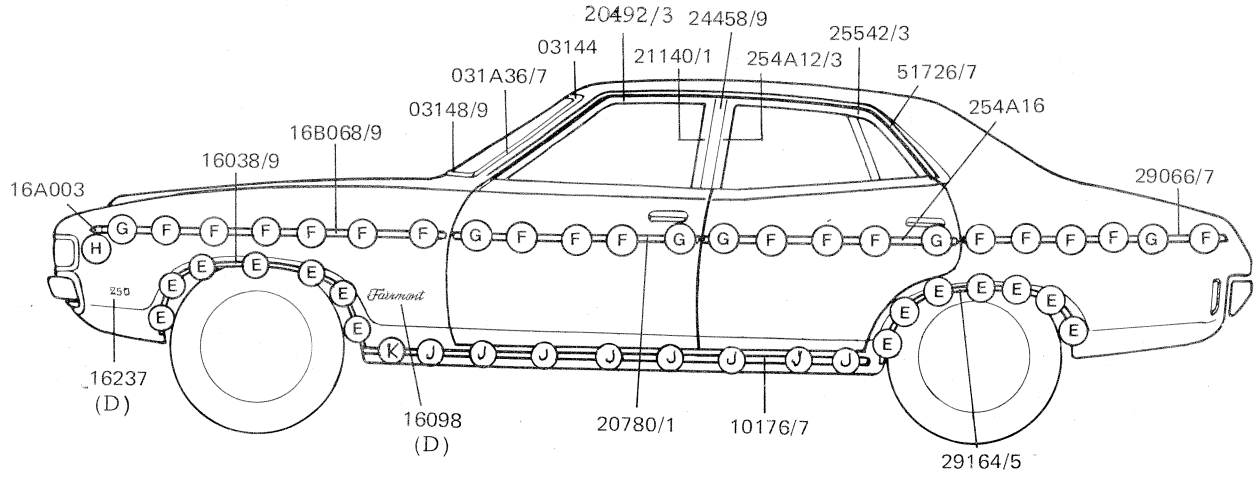

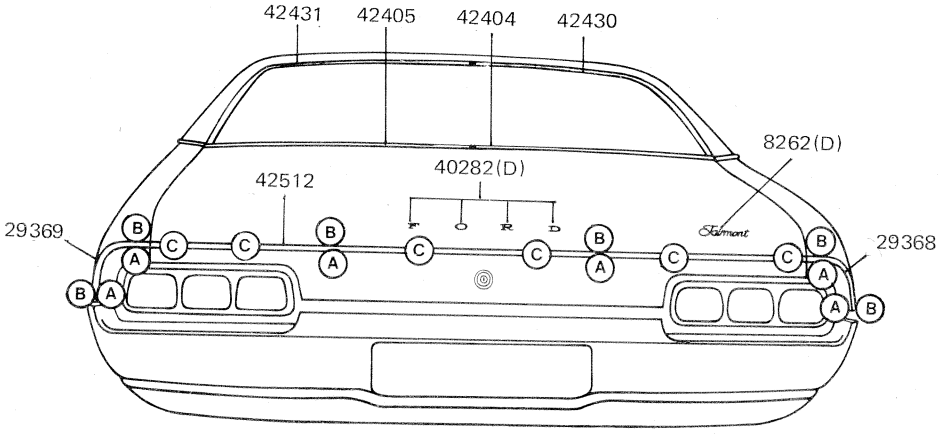

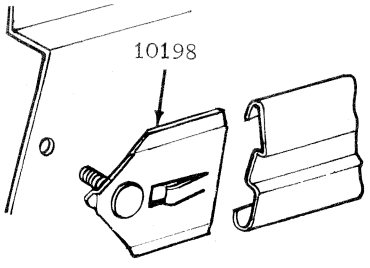

(K)

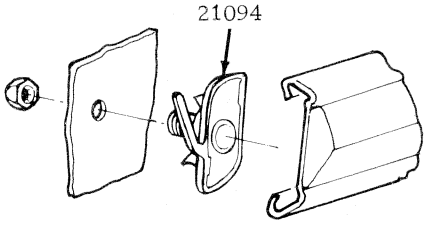

(G)

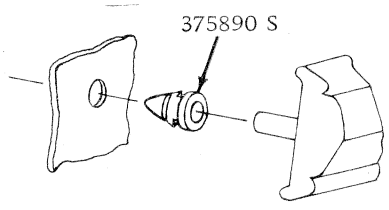

(H)

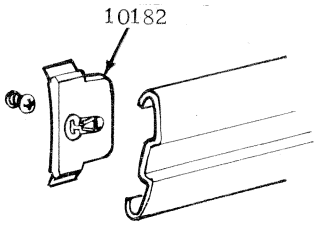

(J)

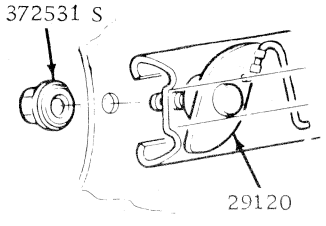

(AB)

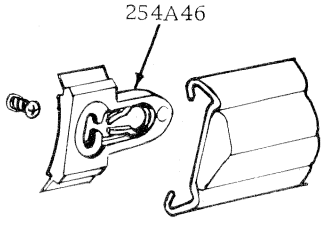

(C) (F)

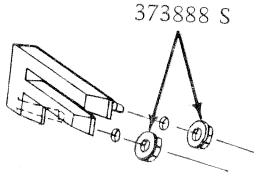

(D)

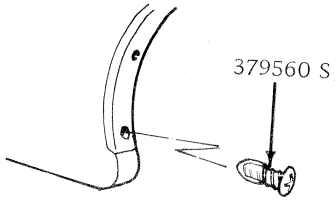

(E)

EXTERIOR ORNAMENTATION - XA FAIRMONT (54D)

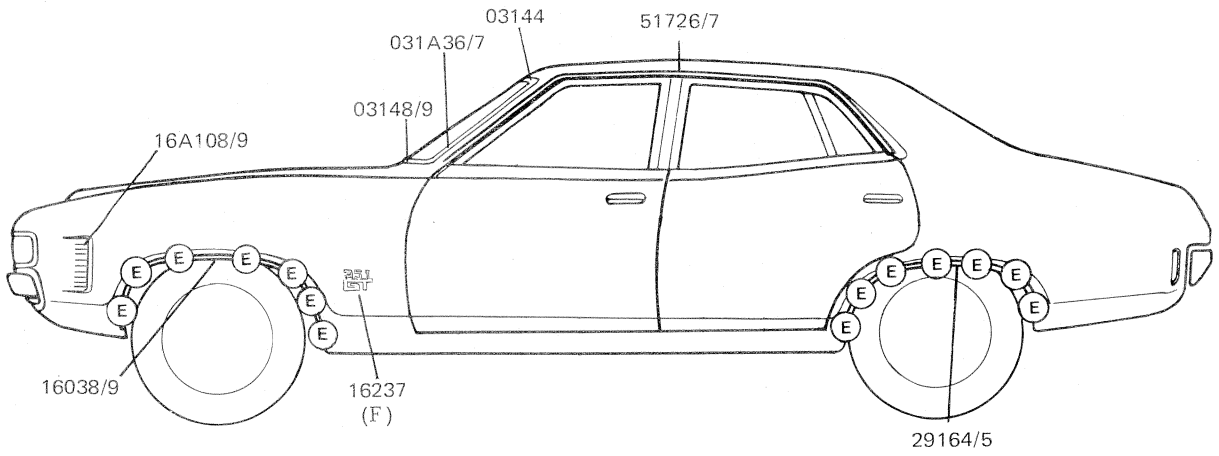

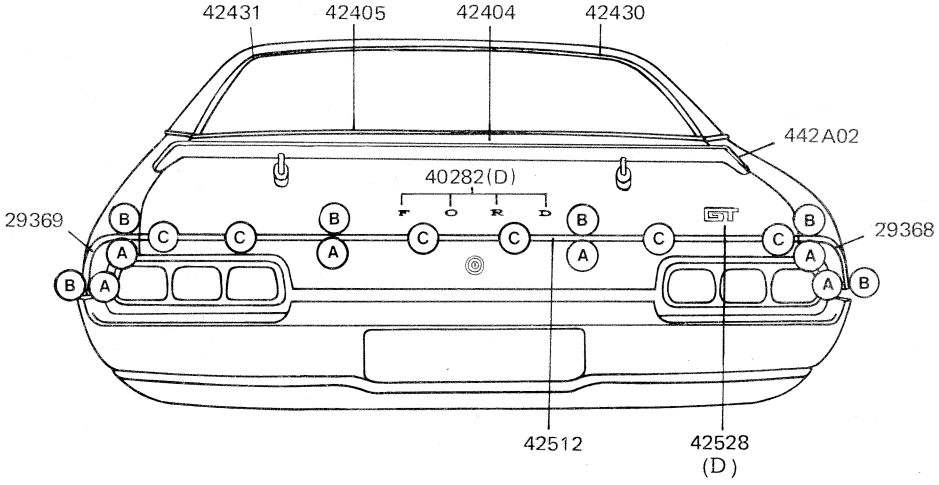

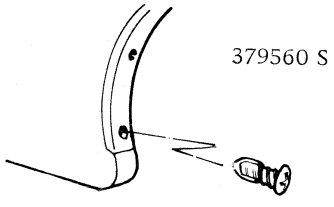

(E)

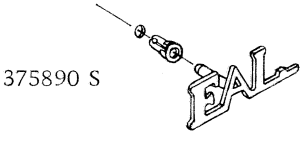

(F)

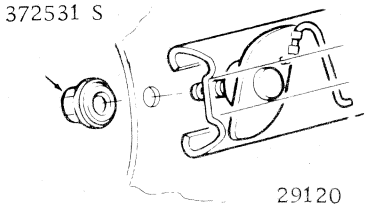

(AB)

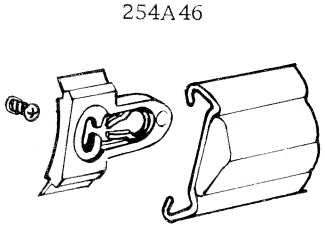

(C)

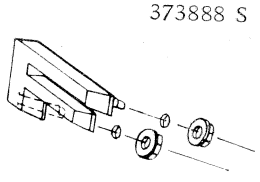

(D)

EXTERIOR ORNAMENTATION - XA FALCON GT (54H)

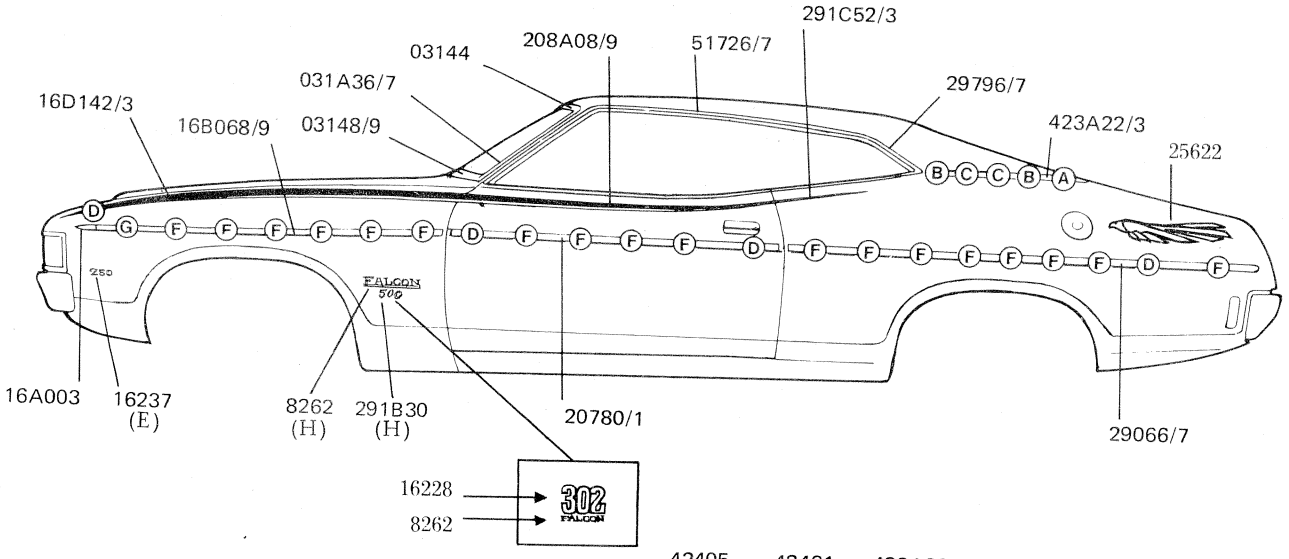

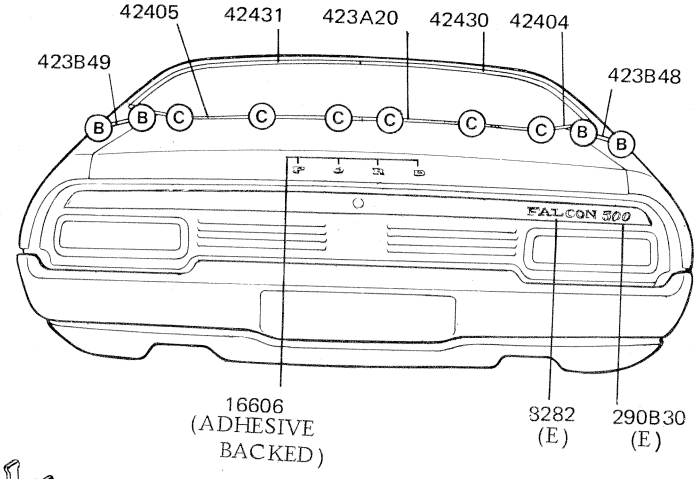

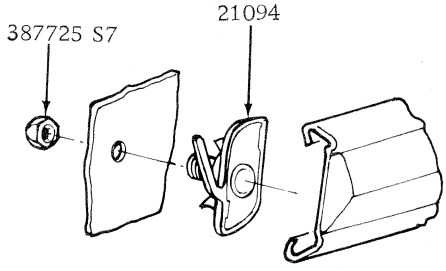

G

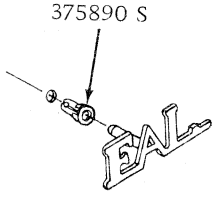

H

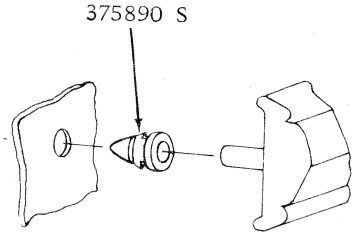

D

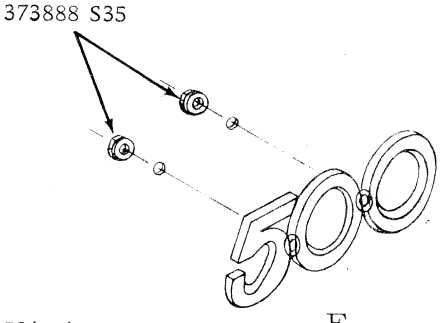

E

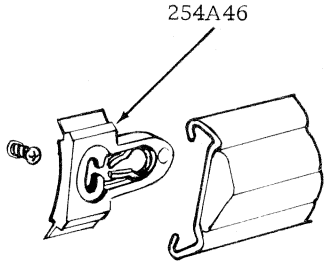

F

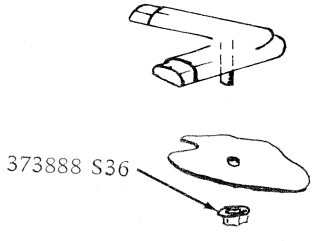

A

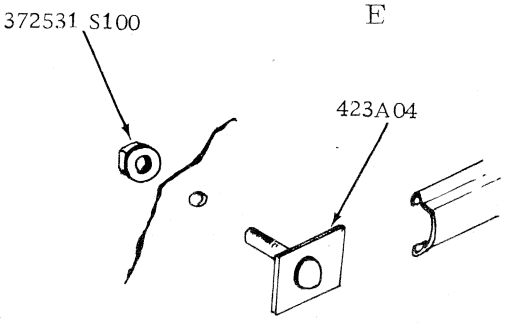

B

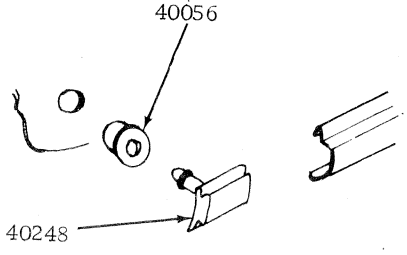

C

EXTERIOR ORNAMENTATION - XA FALCON 500 (65B) & RALLY PACK

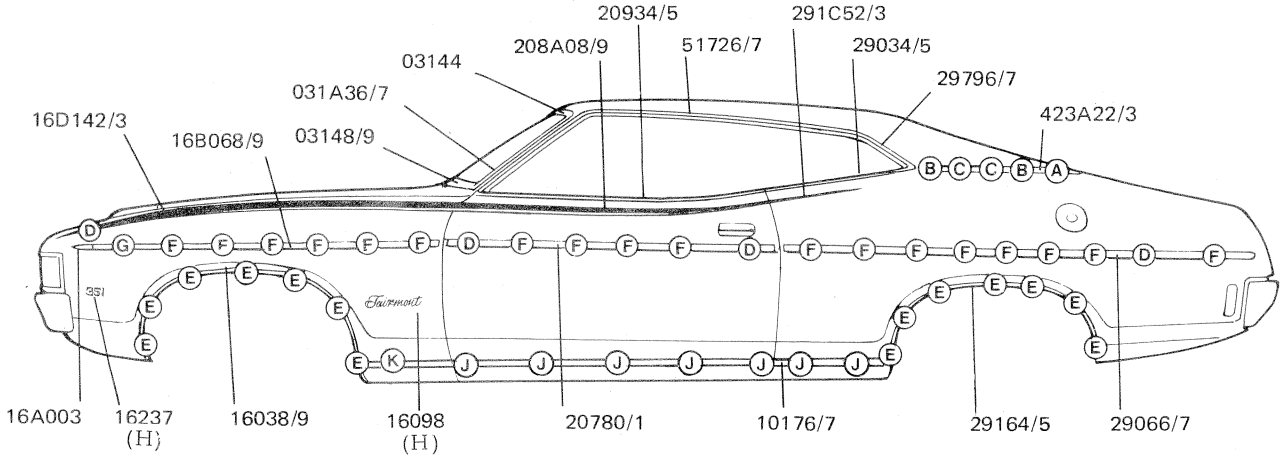

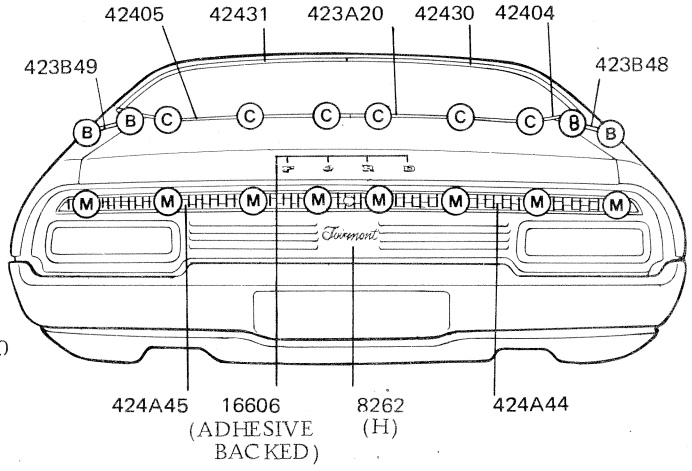

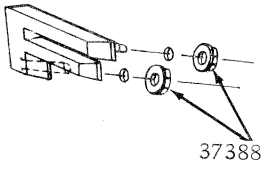

H

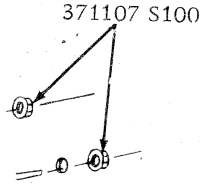

M

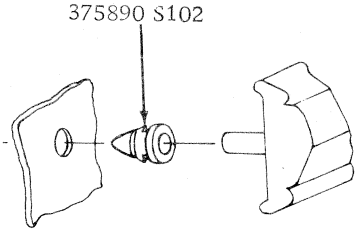

D

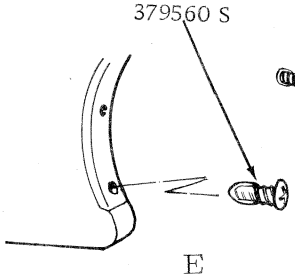

E

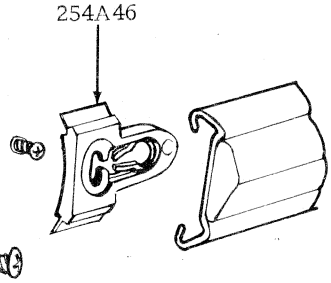

F

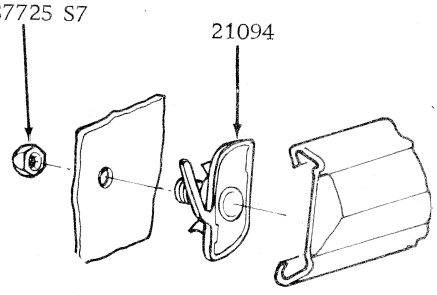

G

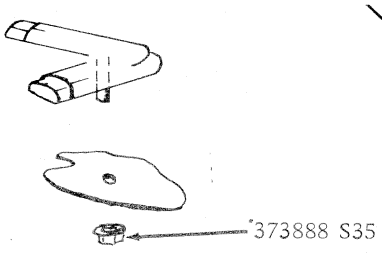

A

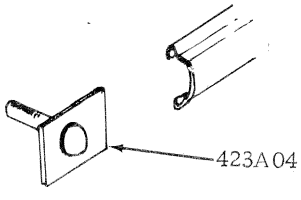

B

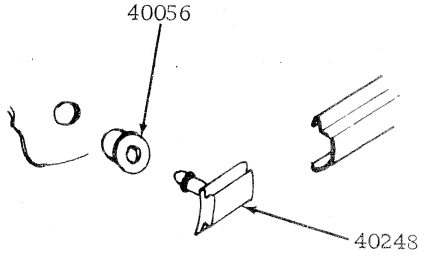

C

EXTERIOR ORNAMENATION - XA FAIRMONT (65D) & RALLY PACK

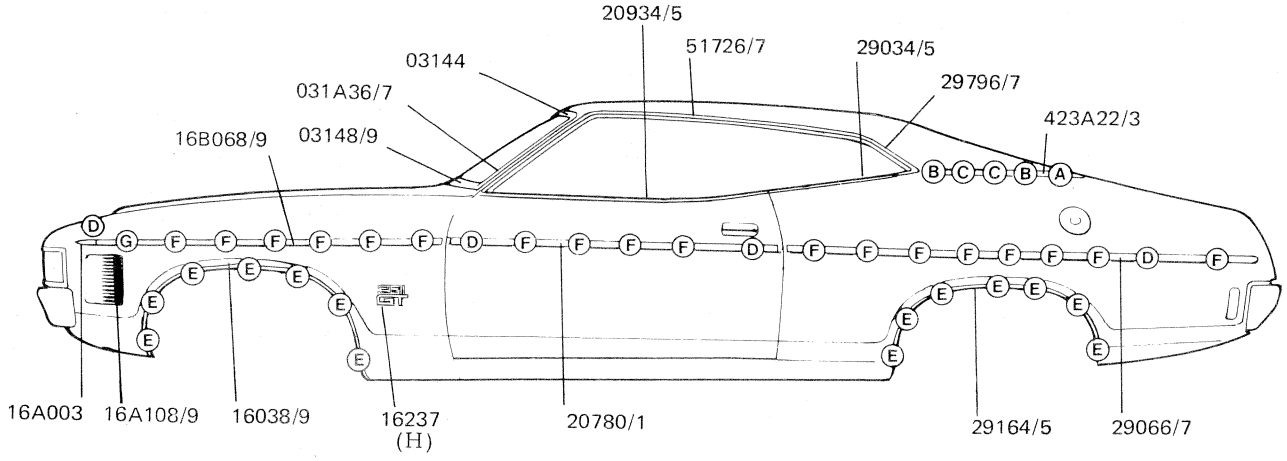

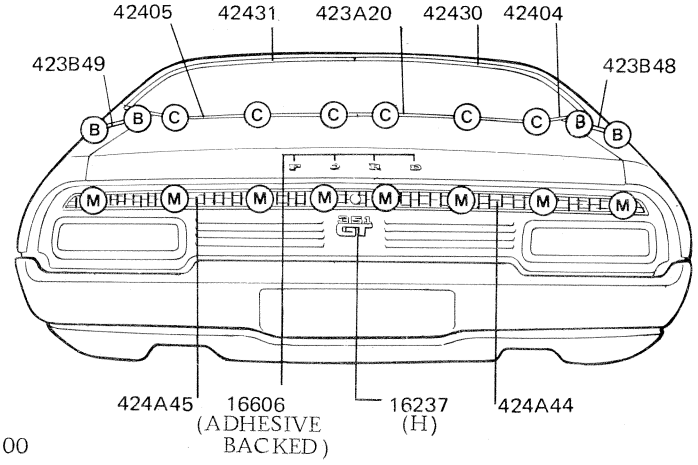

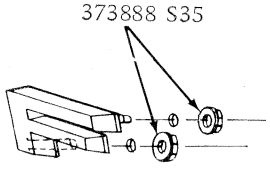

H

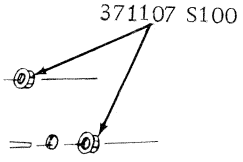

M

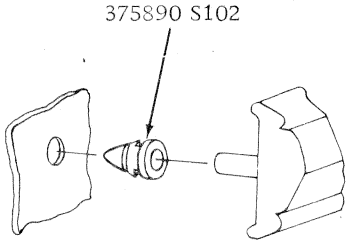

D

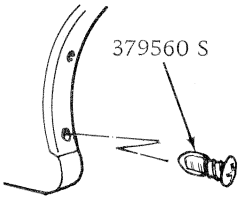

E

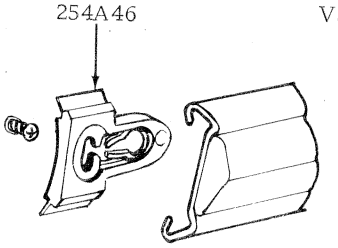

F

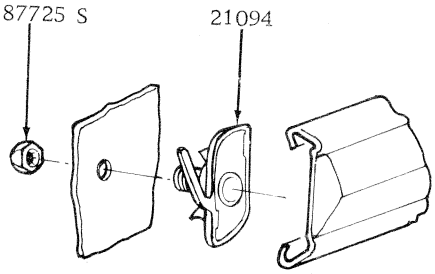

G

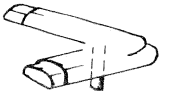

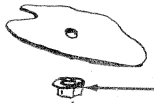



A

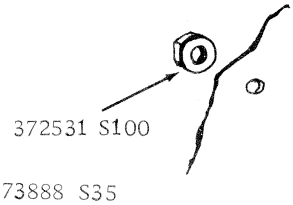

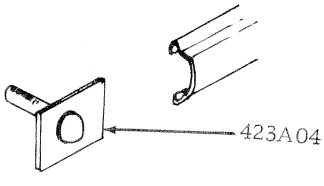

B

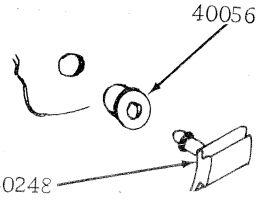

C

EXTERIOR ORNAMENTATION - XA FALCON GT (65H)

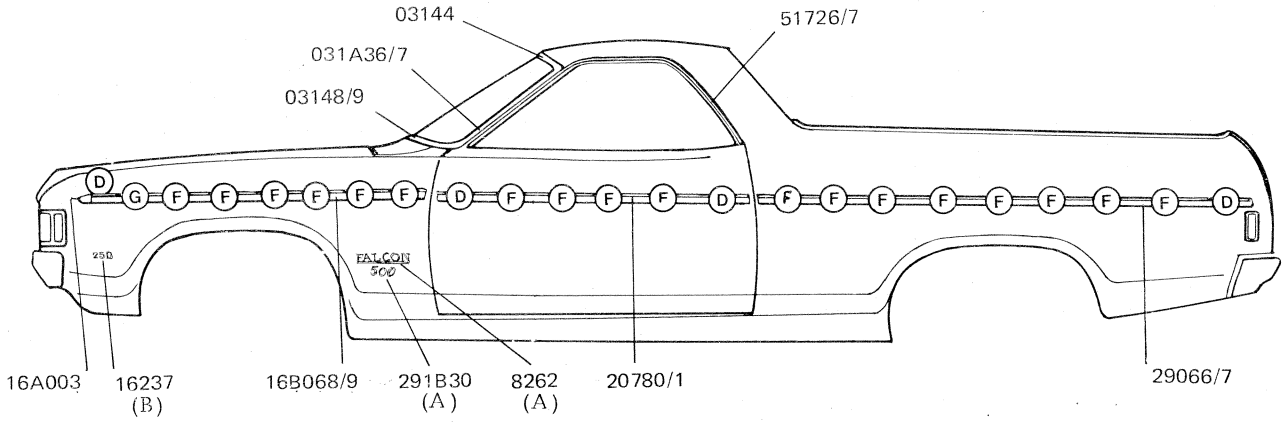

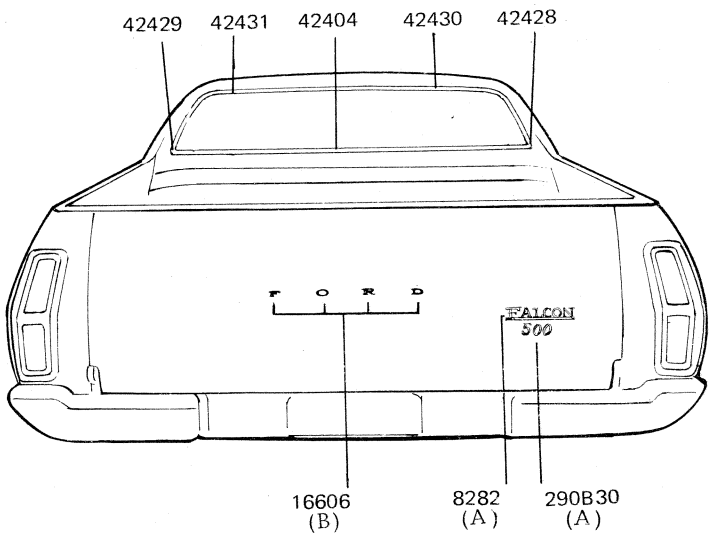

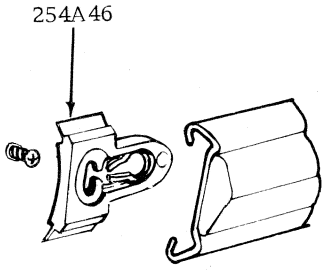

F

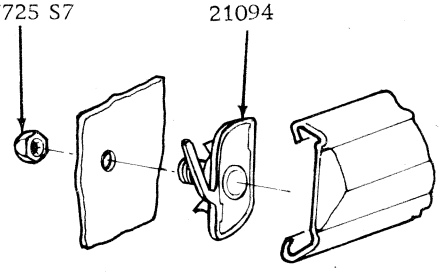

G

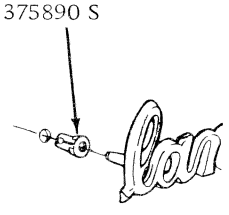

A

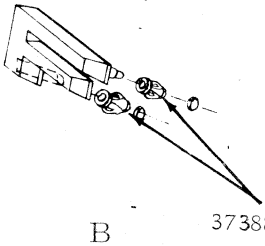

B

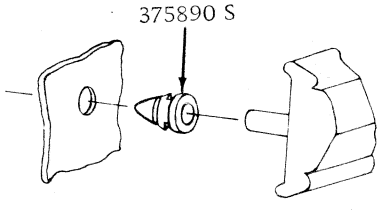

D

EXTERIOR ORNAMENTATION - XA FALCON 500 (66B)

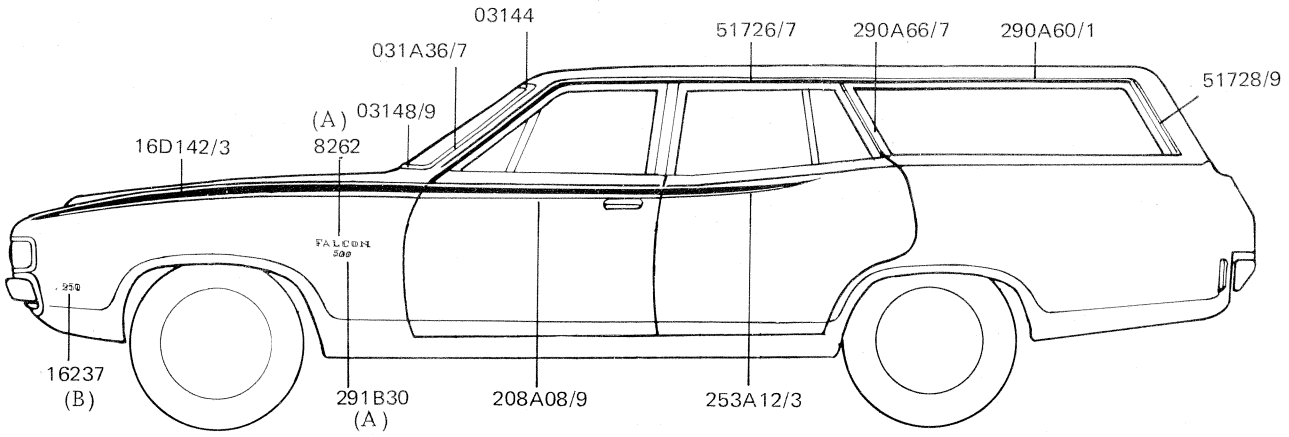

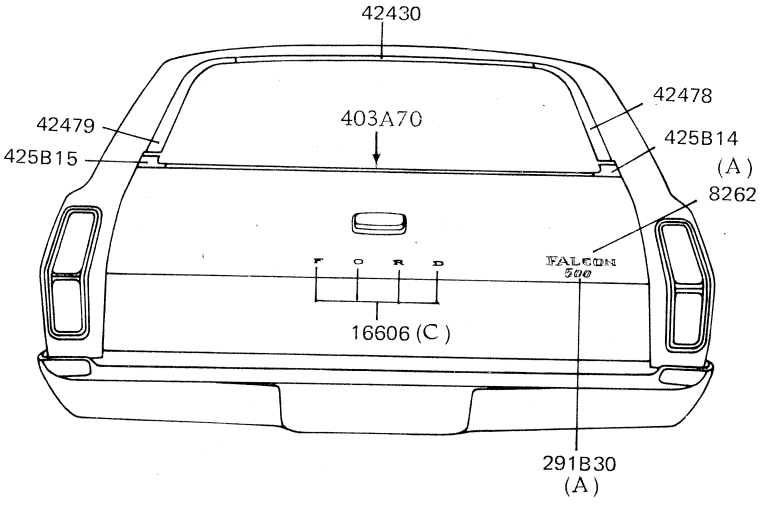

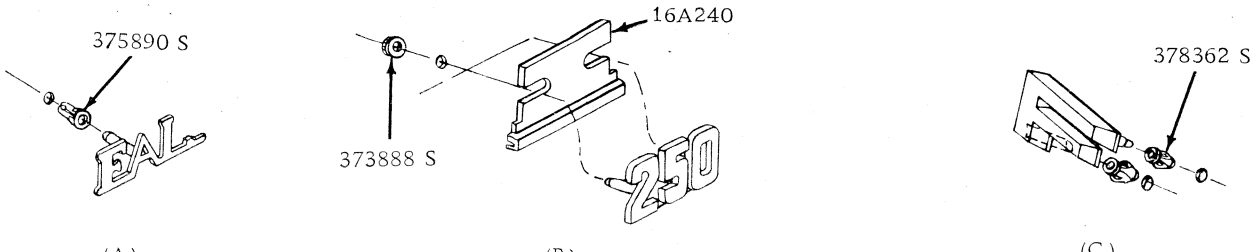

EXTERIOR ORNAMENTATION - XA FALCON 500 (71B) & RALLY PACK

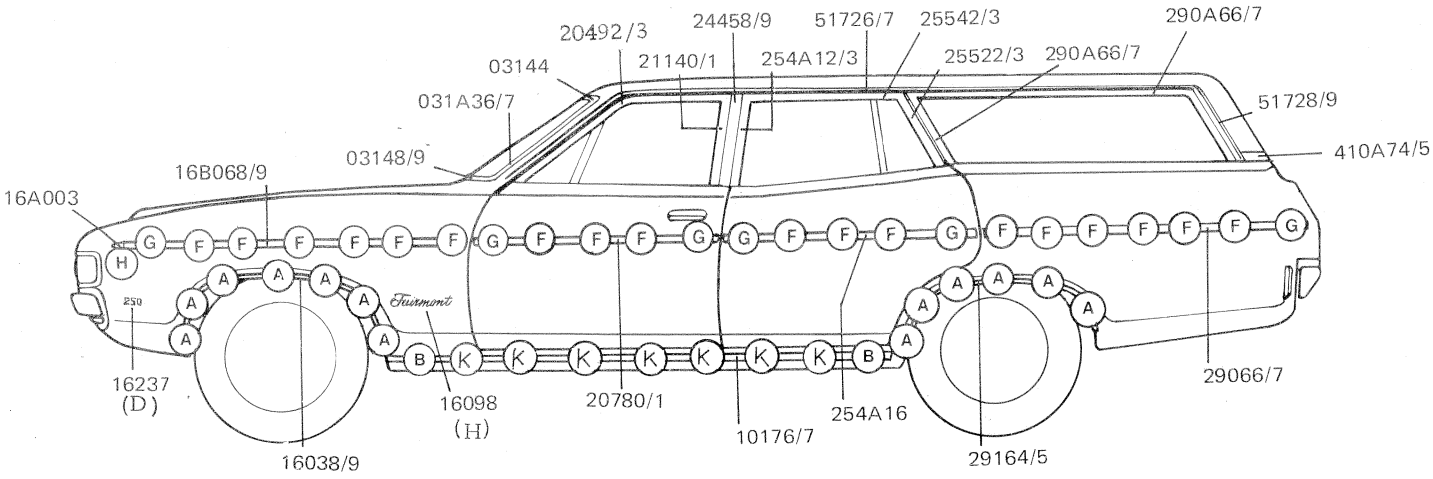

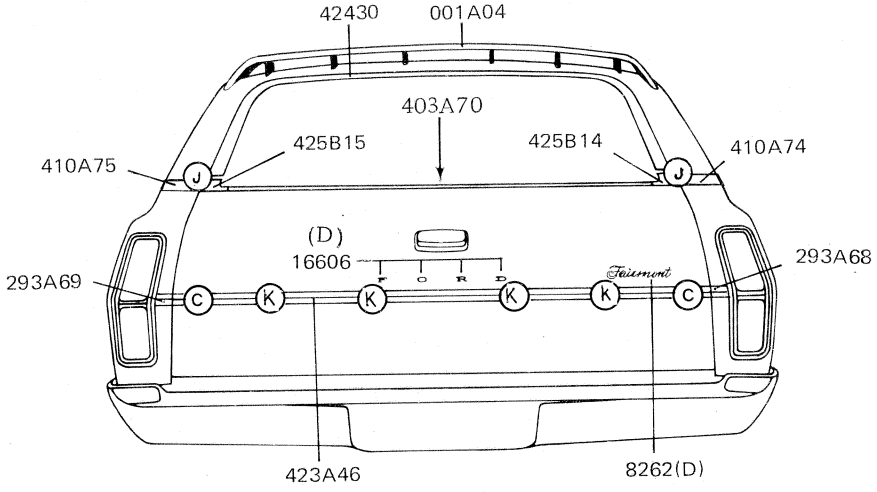

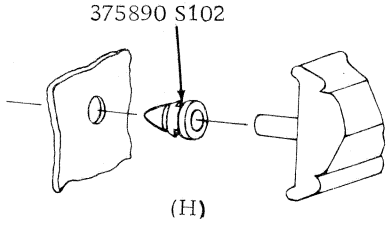

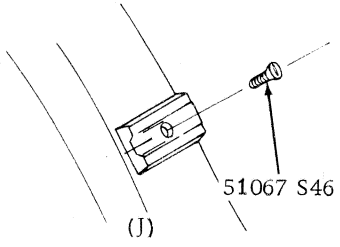

(K)

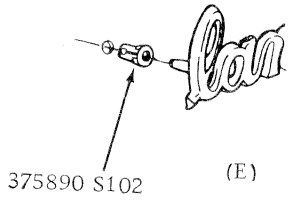

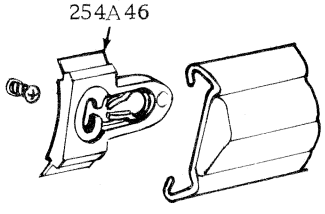

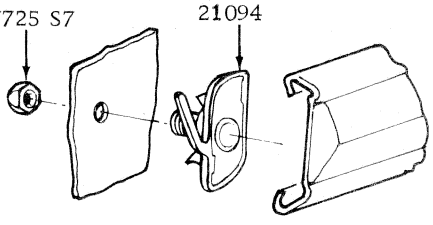

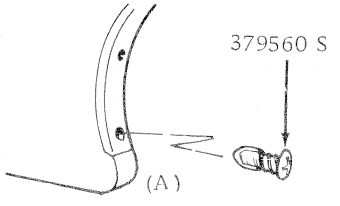

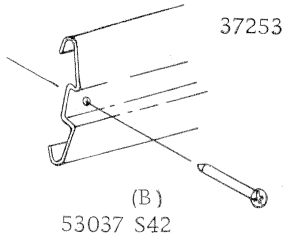

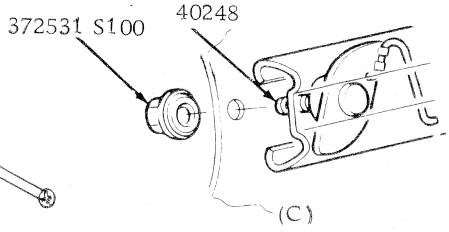

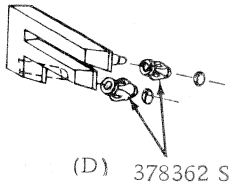

EXTERIOR ORNAMENTATION - XA FAIRMONT (71D)

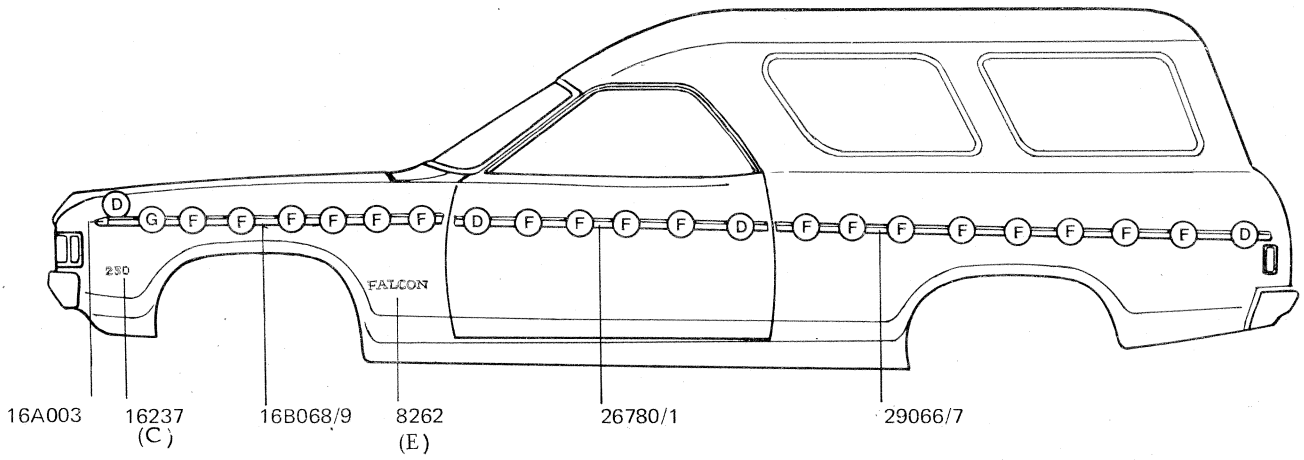

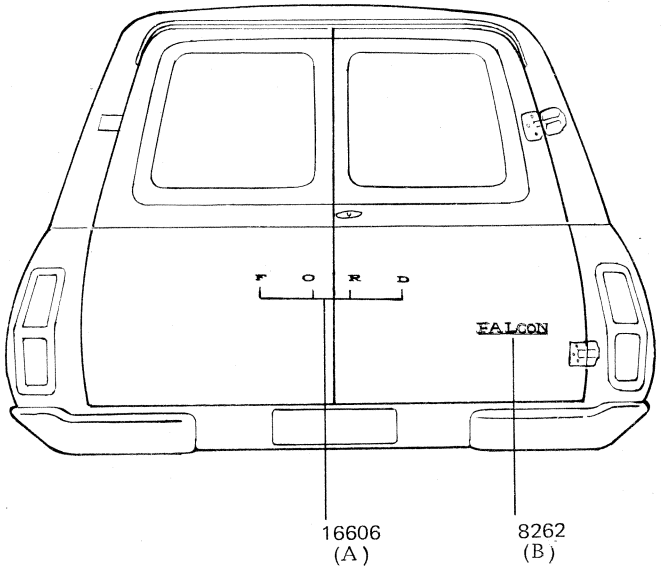

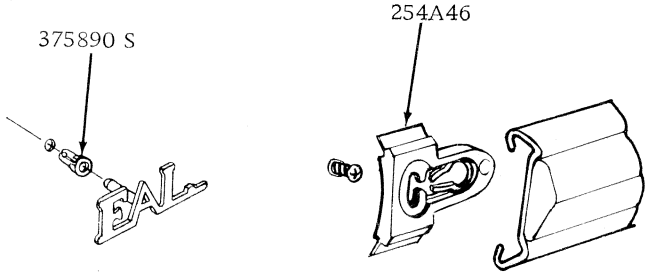

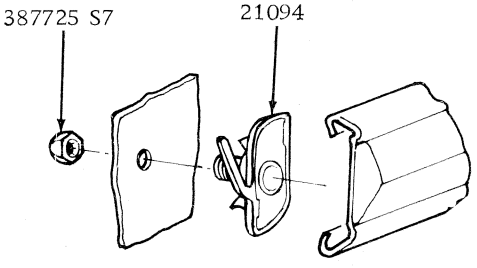

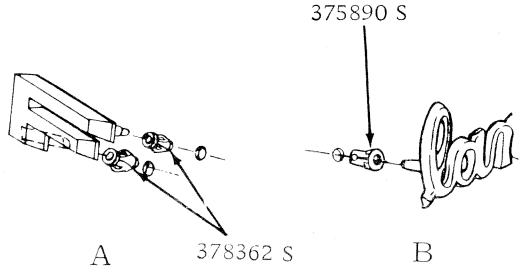

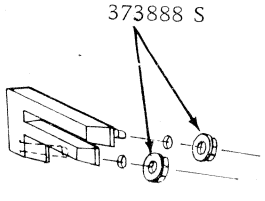

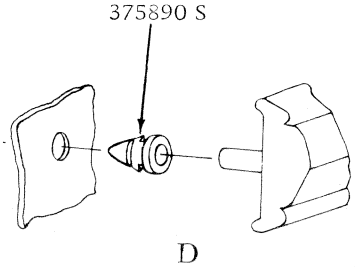

EXTERIOR ORNAMENTATION - XA FALCON (78A)

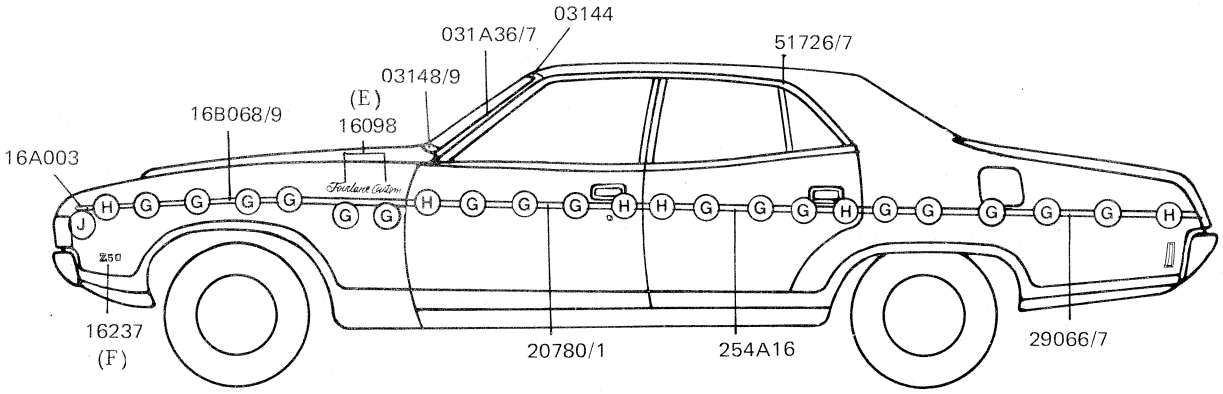

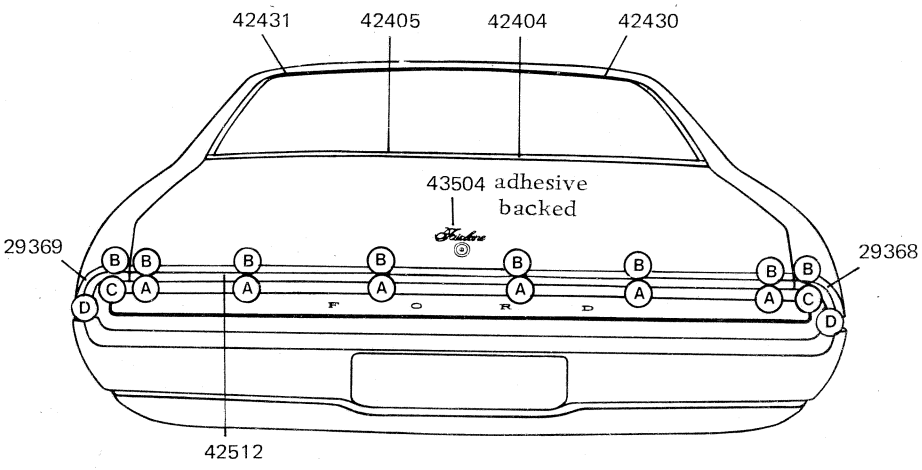

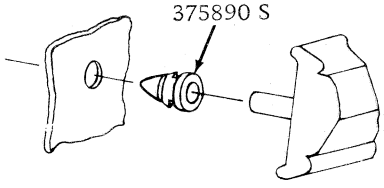

(J)

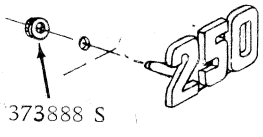

(F)

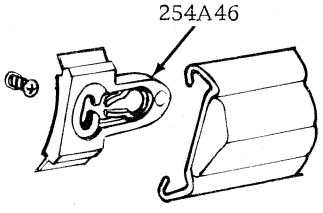

(G)

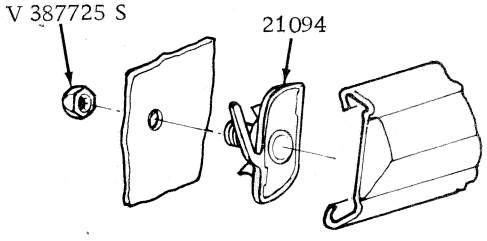

(H)

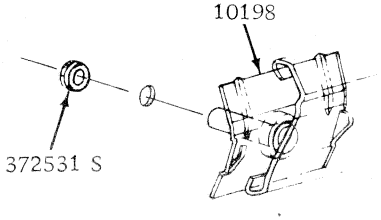

(AB)

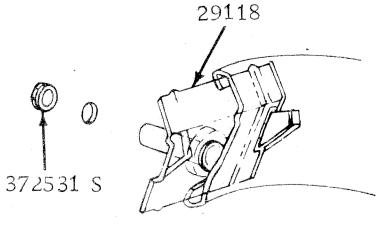

(BC)

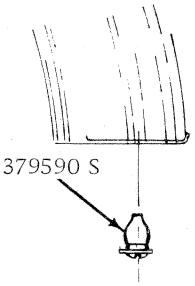

(D)

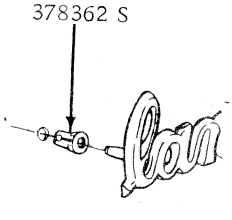

(E)

EXTERIOR ORNAMENTATION - ZF FAIRLANE CUSTOM (54E)

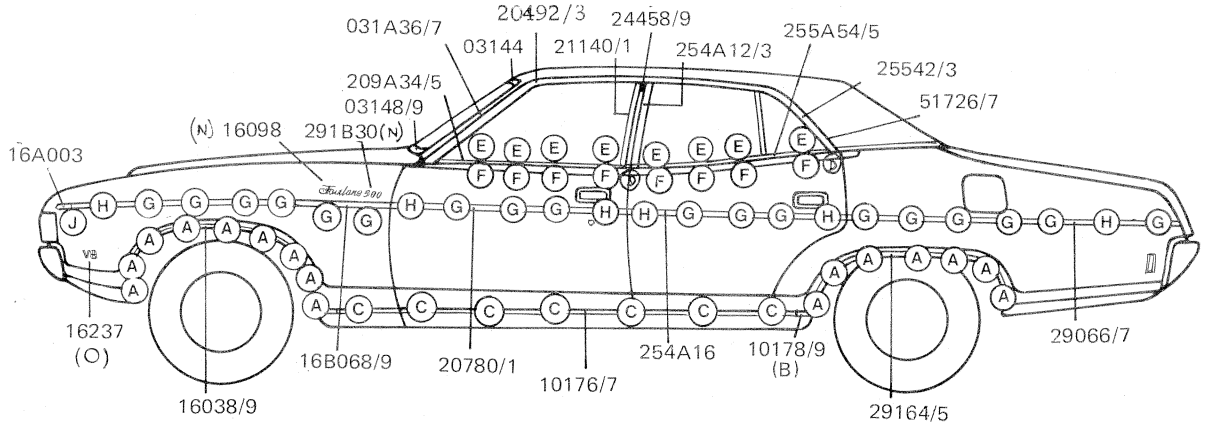

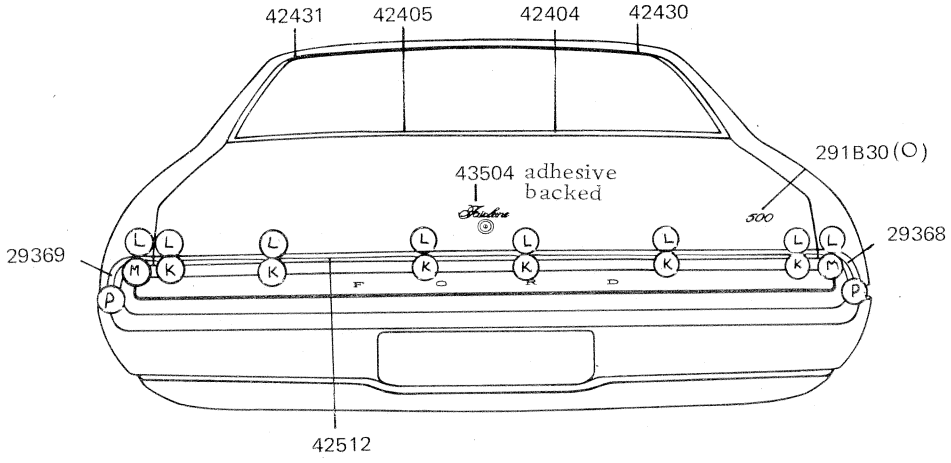

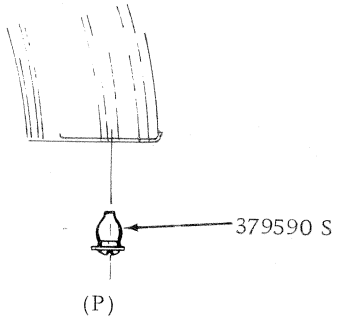

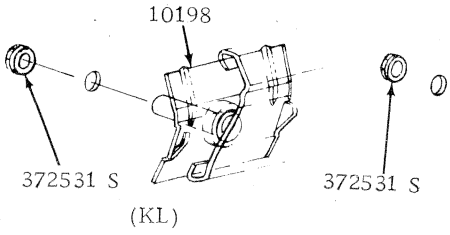

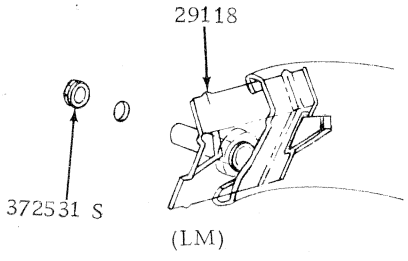

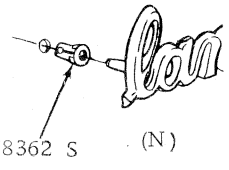

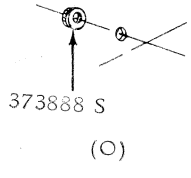

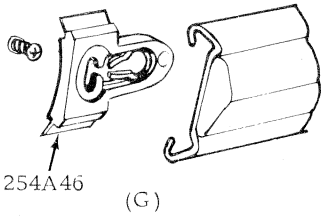

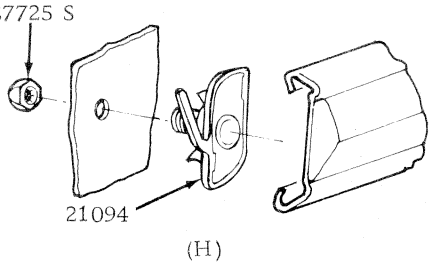

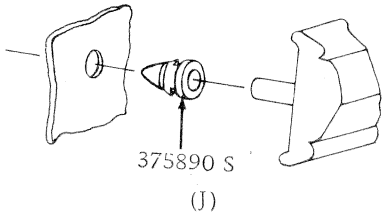

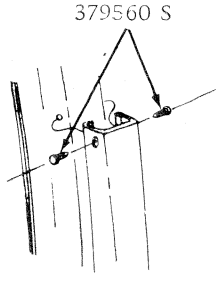

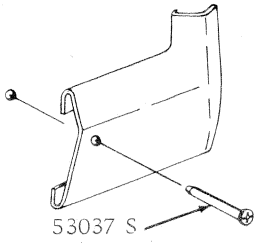

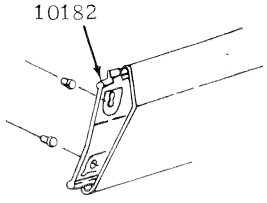

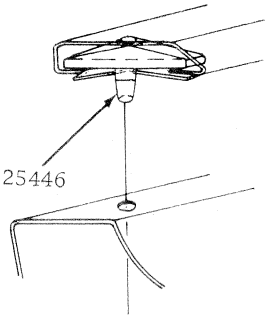

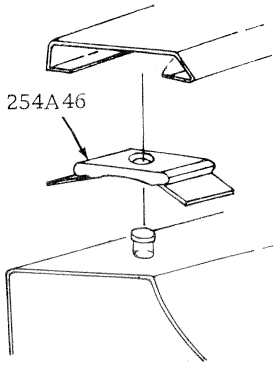

EXTERIOR ORNAMENTATION - ZF FAIRLANE 500 (54G)

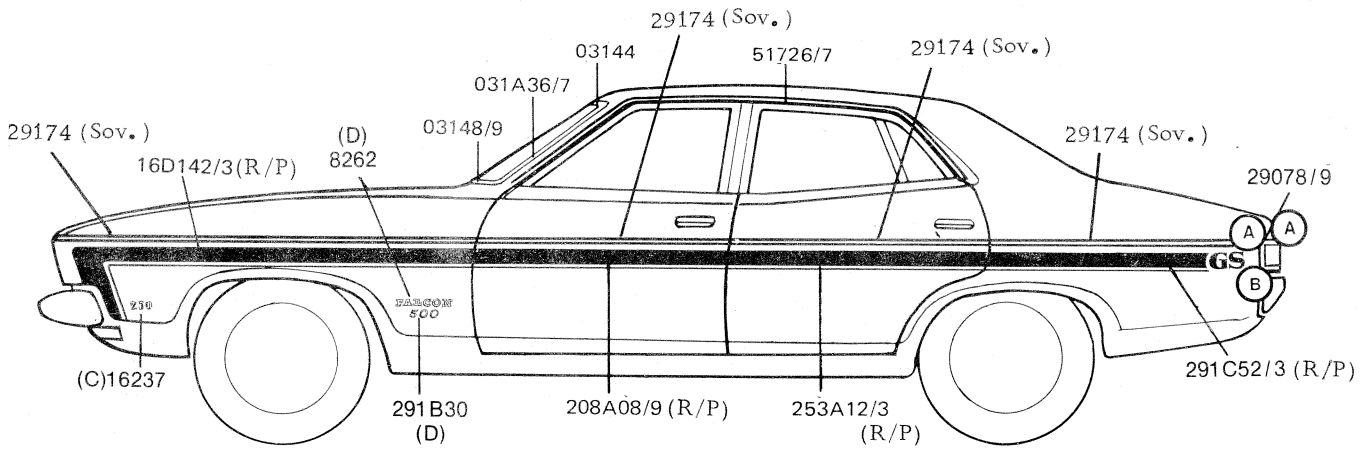

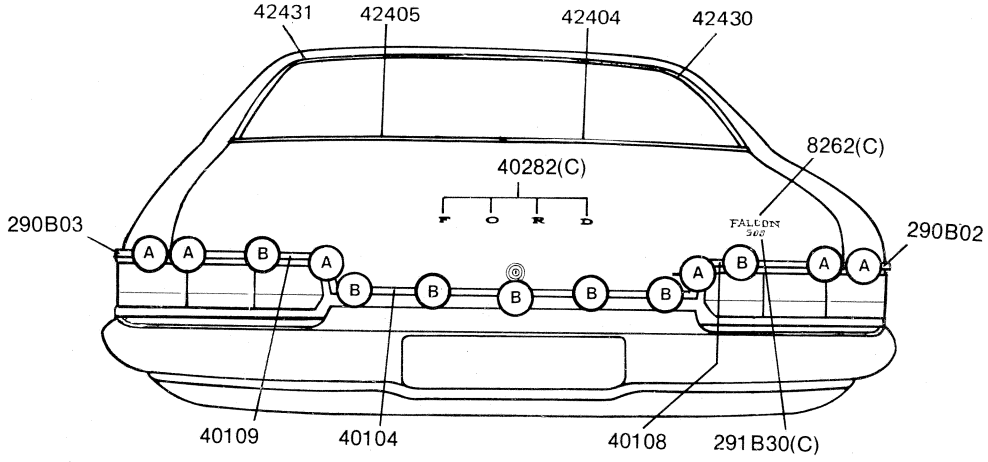

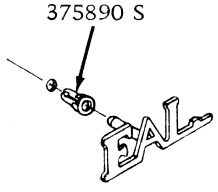

(D)

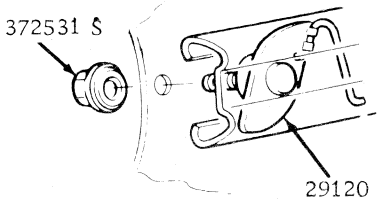

(A)

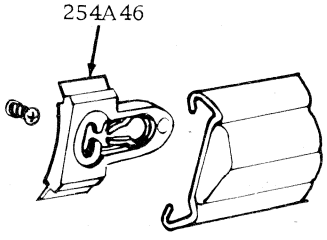

(B)

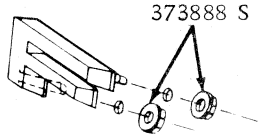

(C)

EXTERIOR ORNAMENTATION – XB FALCON 500 (54B) WITH RALLY PACK OR "SOVEREIGN" BODYSIDE STRIPES

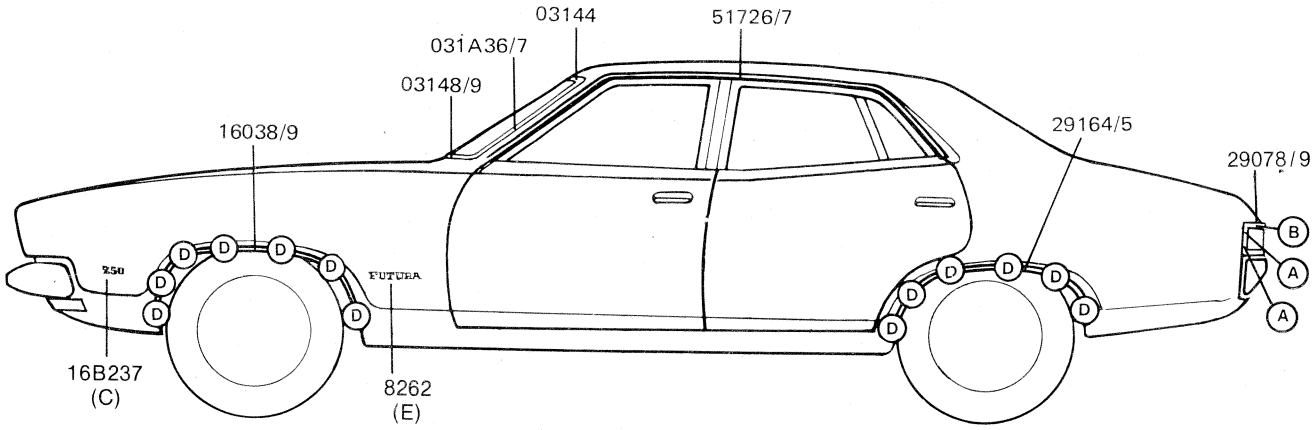

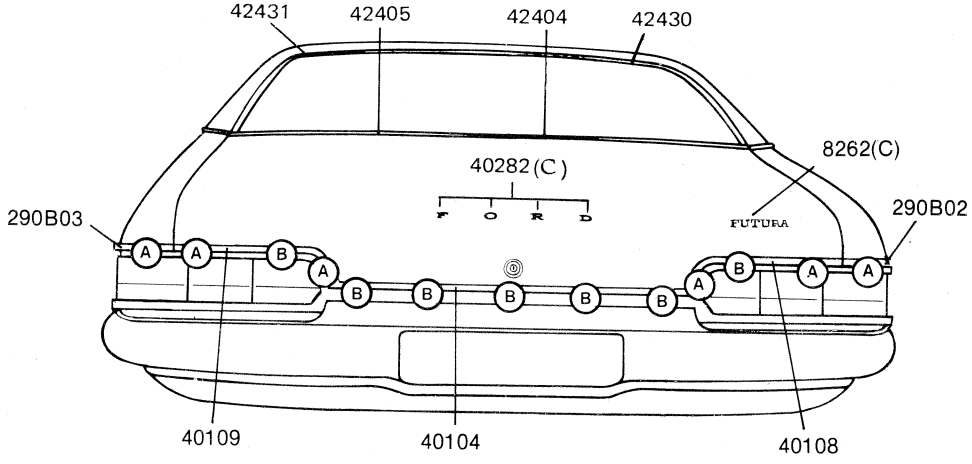

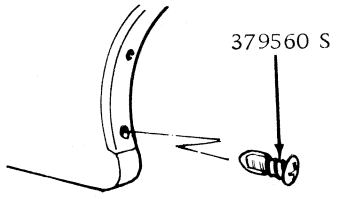

(D)

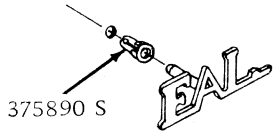

(E)

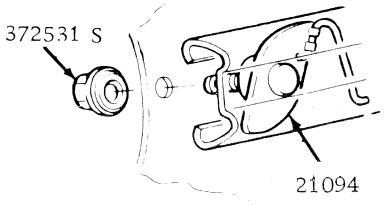

(A)

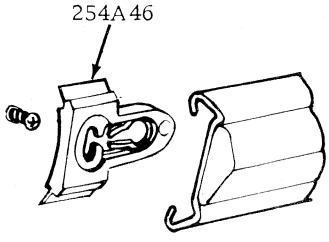

(B)

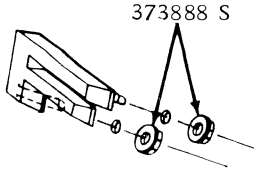

(C)

EXTERIOR ORNAMENTATION – XB FUTURA (54C)

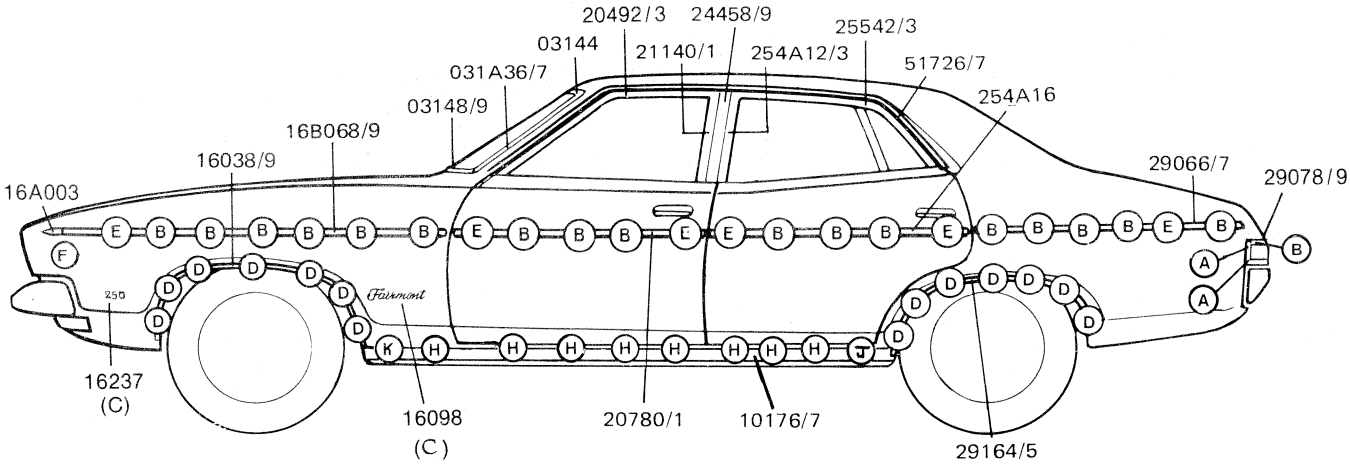

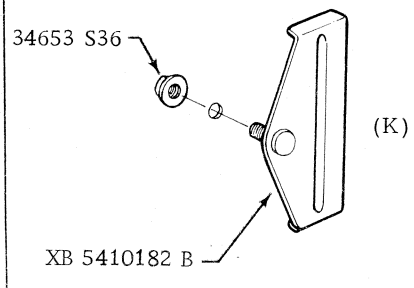

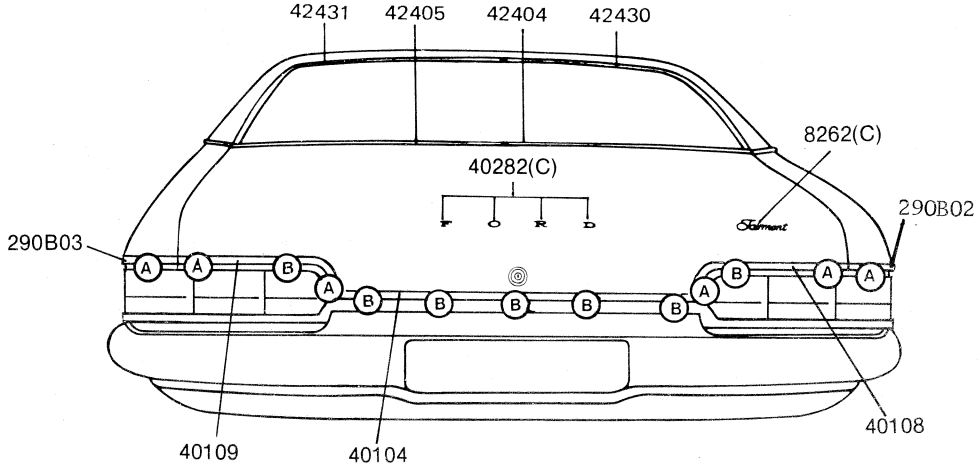

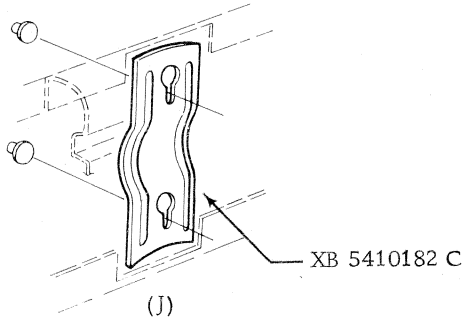

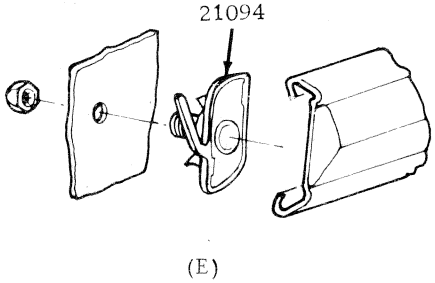

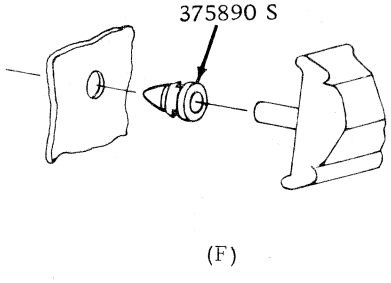

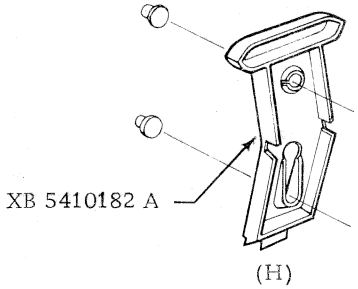

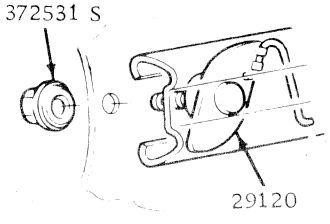

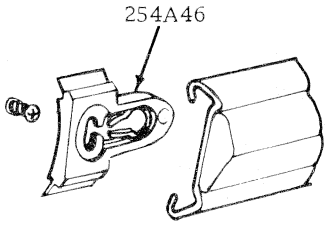

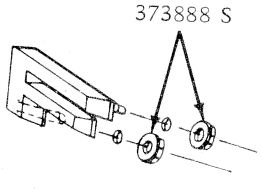

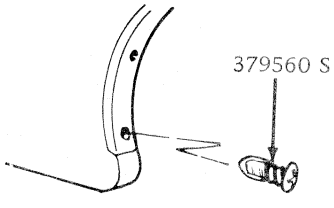

EXTERIOR ORNAMENTATION – XB FAIRMONT (54D)

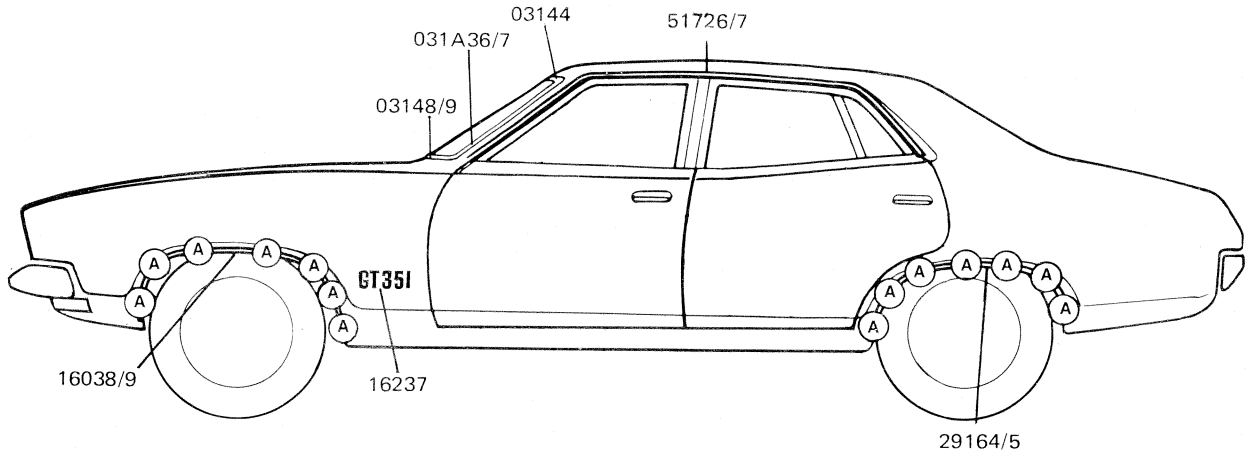

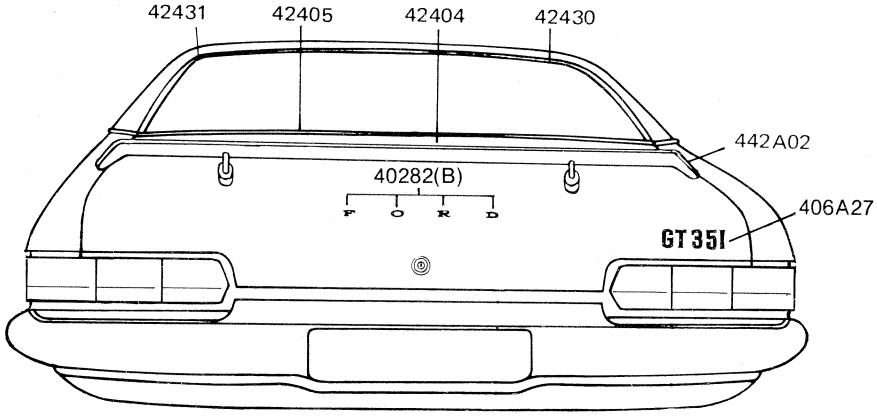

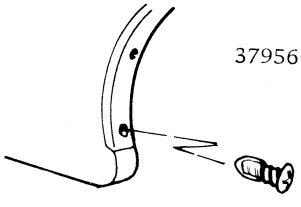

(A)

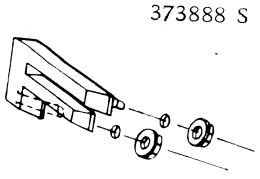

(B)

EXTERIOR ORNAMENTATION – XB FALCON GT (54H)

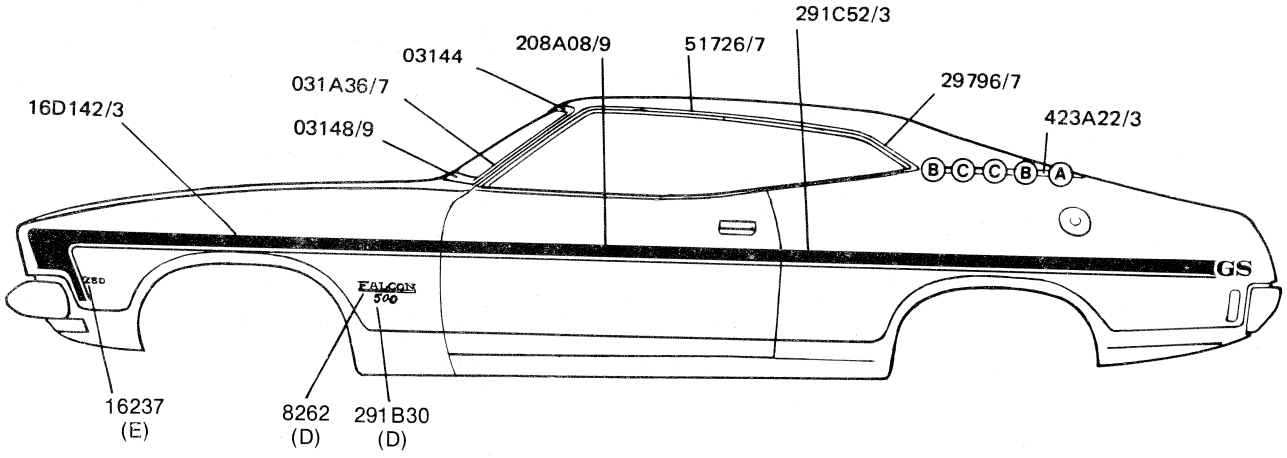

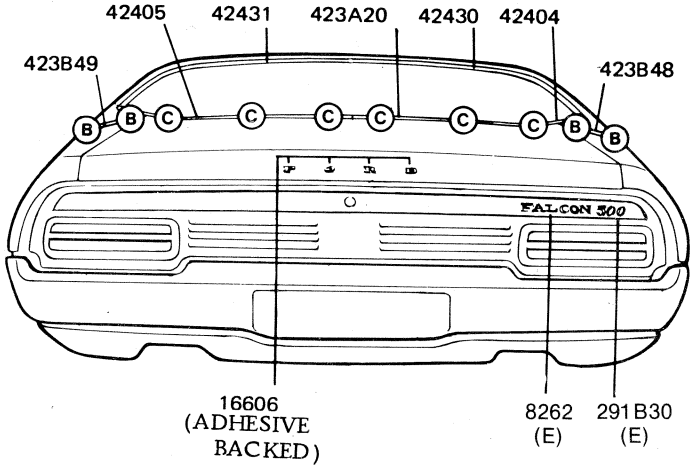

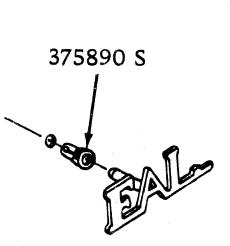

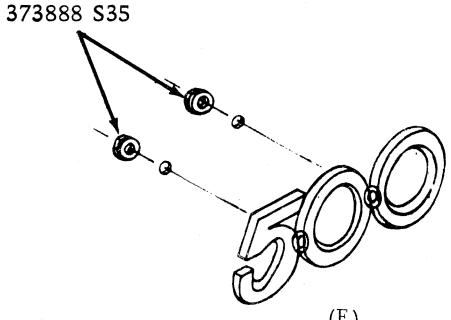

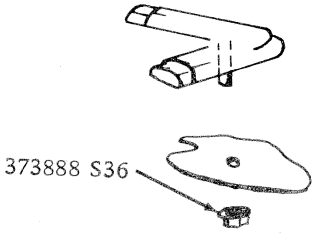

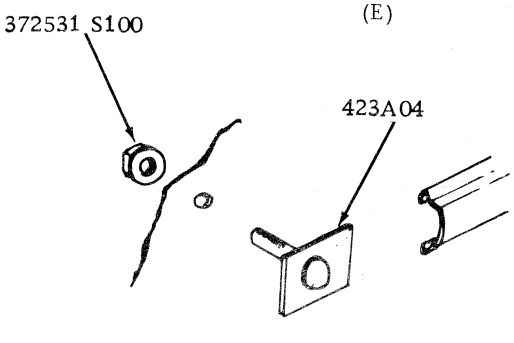

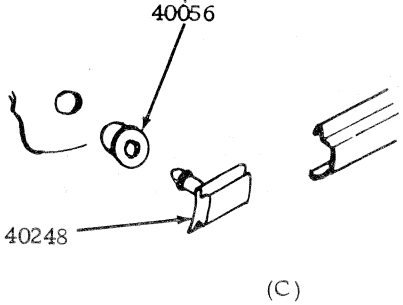

EXTERIOR ORNAMENTATION – XB FALCON 500 (65B) & RALLY PACK

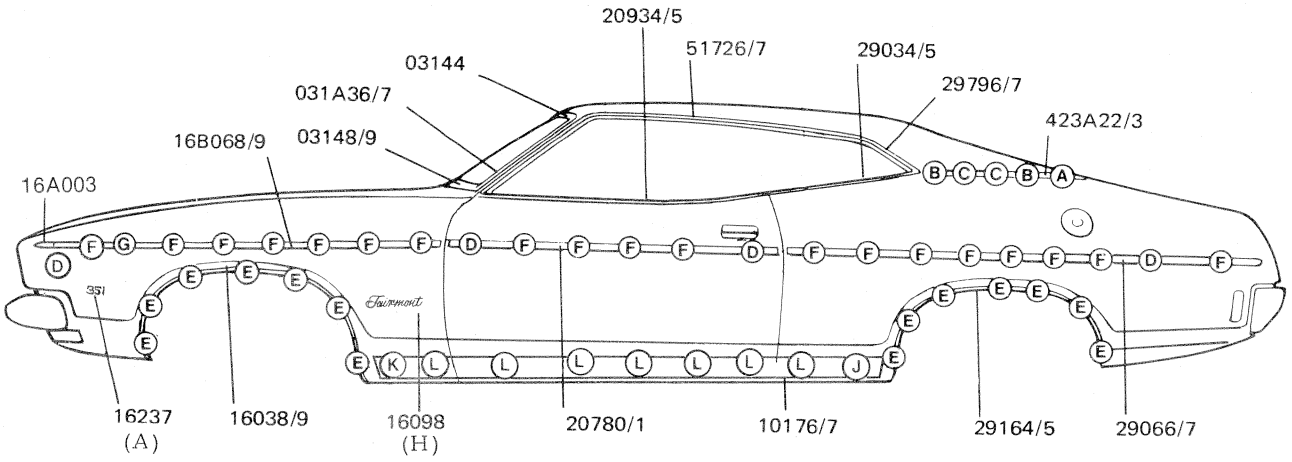

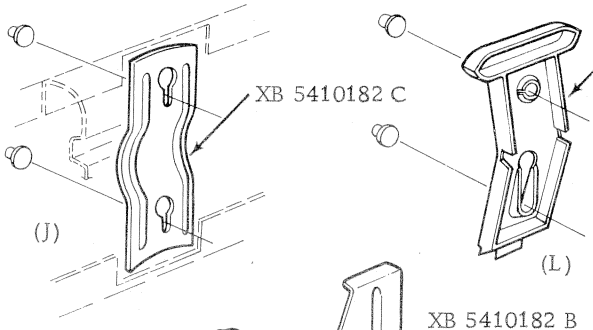

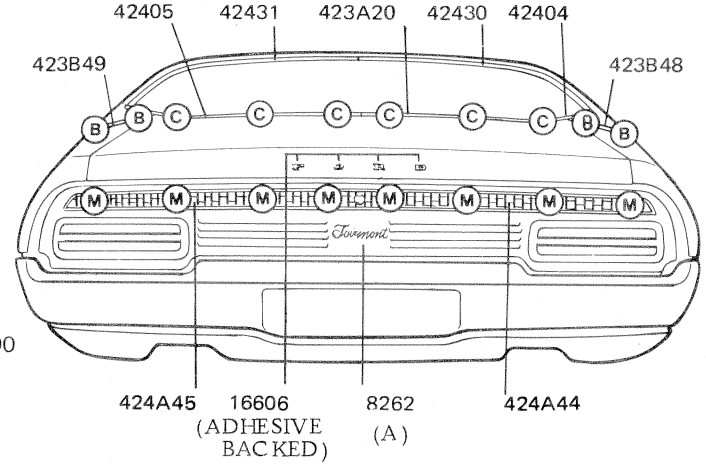

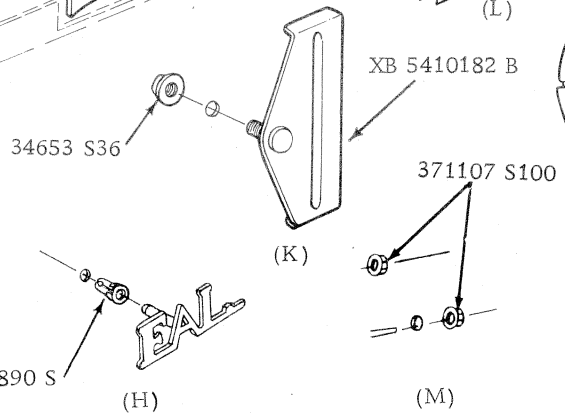

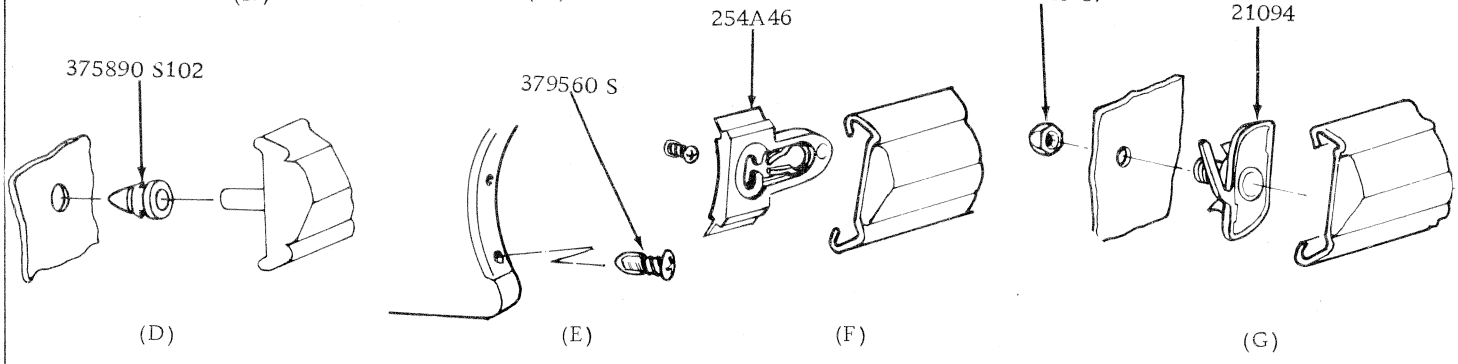

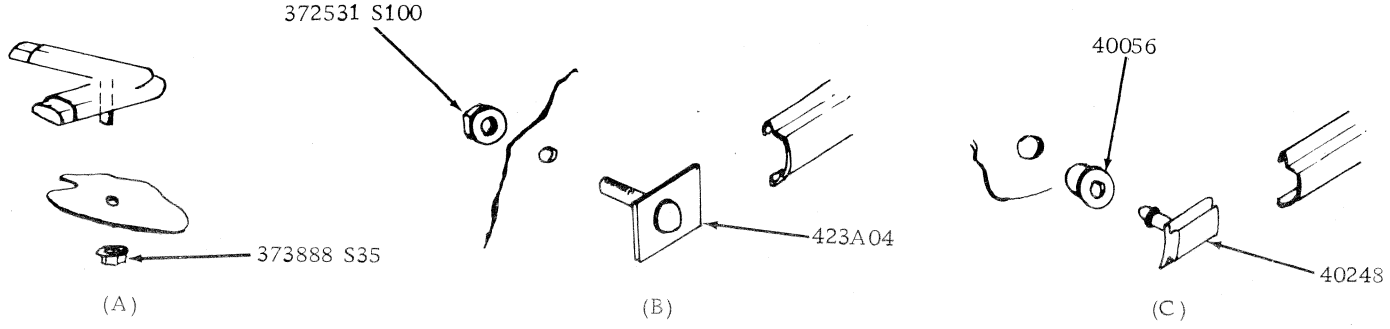

EXTERIOR CRNAMENTATION – XB FAIRMONT (65D)

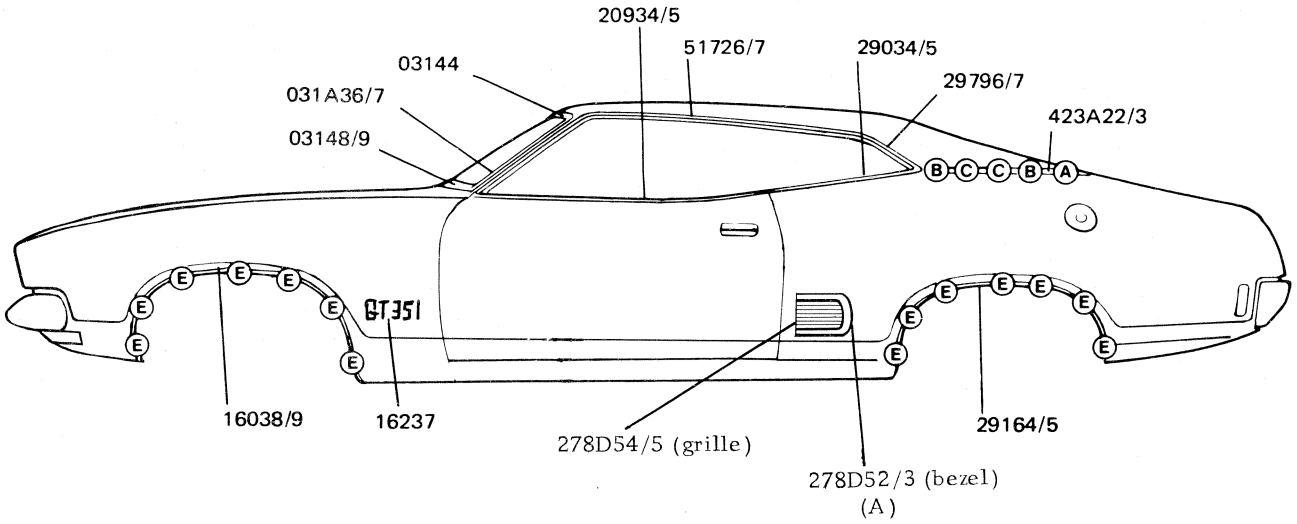

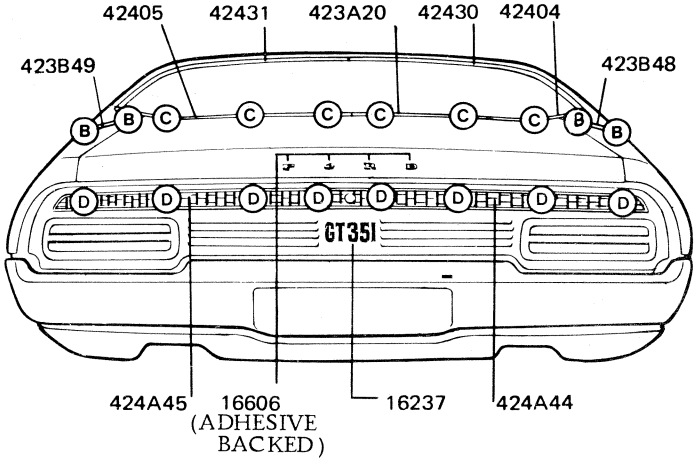

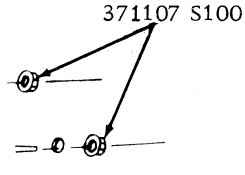

(D)

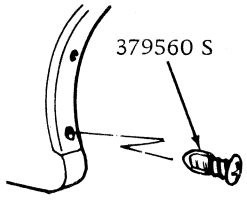

(E)

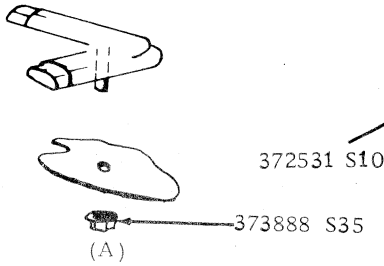

(A)

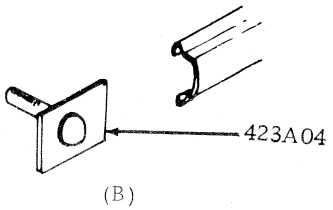

(B)

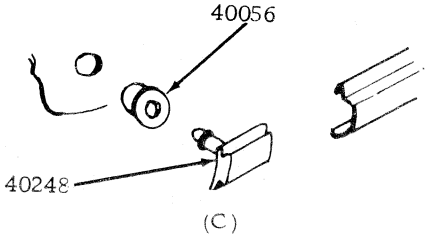

(C)

EXTERIOR ORNAMENTATION – XB FALCON GT (65H)

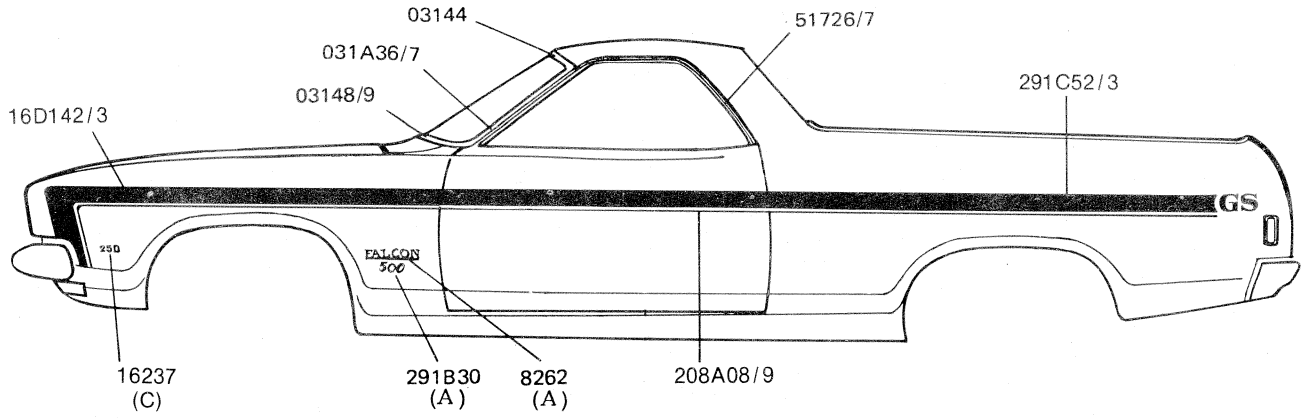

FOR BODYSIDE MOULDINGS
REFER BODY TYPE 78B ILLUSTRATION

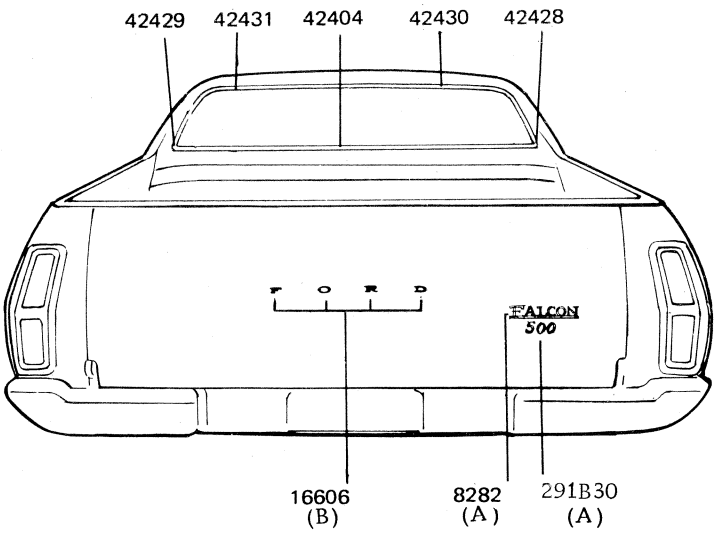

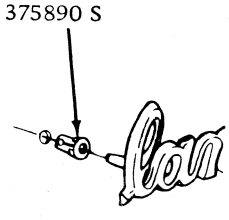

(A)

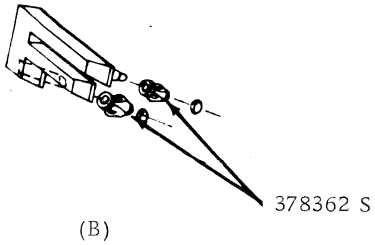

(B)

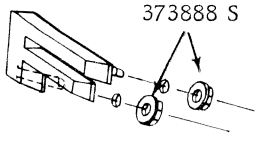

(C)

EXTERIOR ORNAMENTATION – XB FALCON 500 (66B) & RALLY PACK

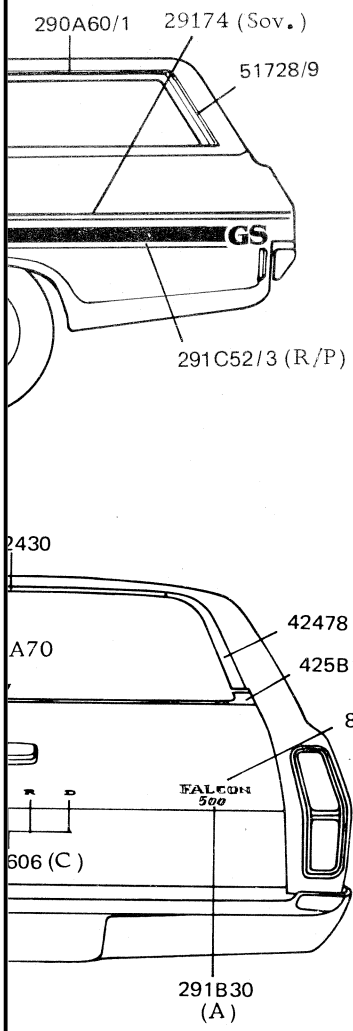

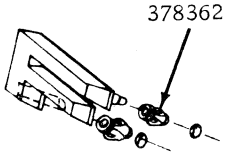

(C)

"SOVEREIGN" BODYSIDE STRIPES

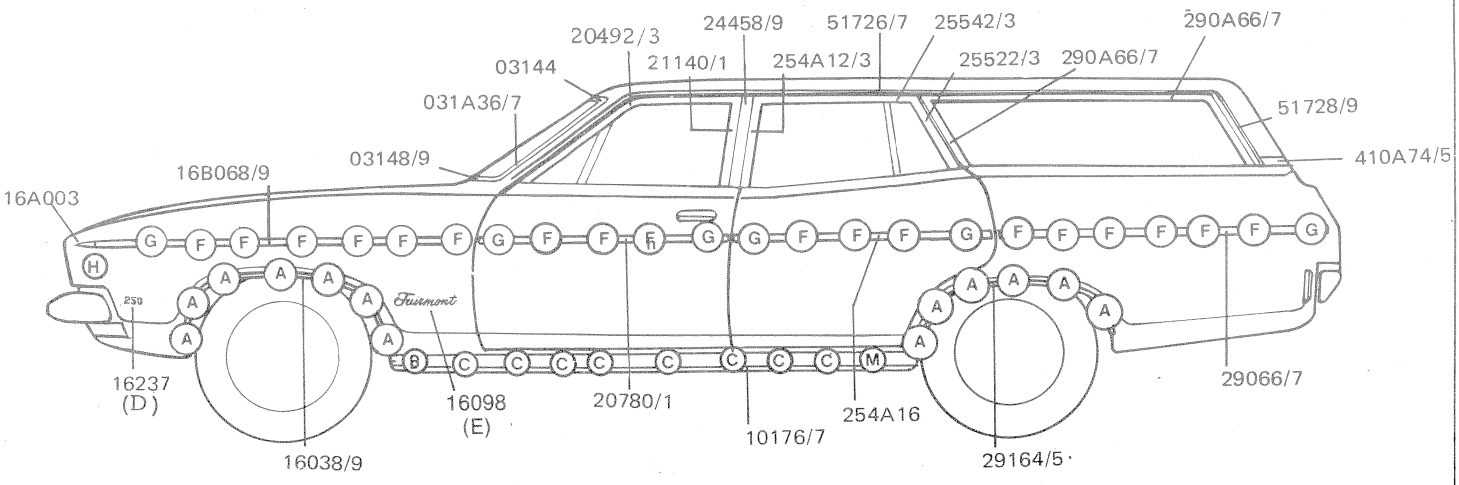

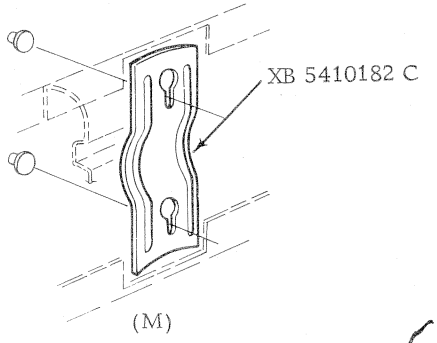

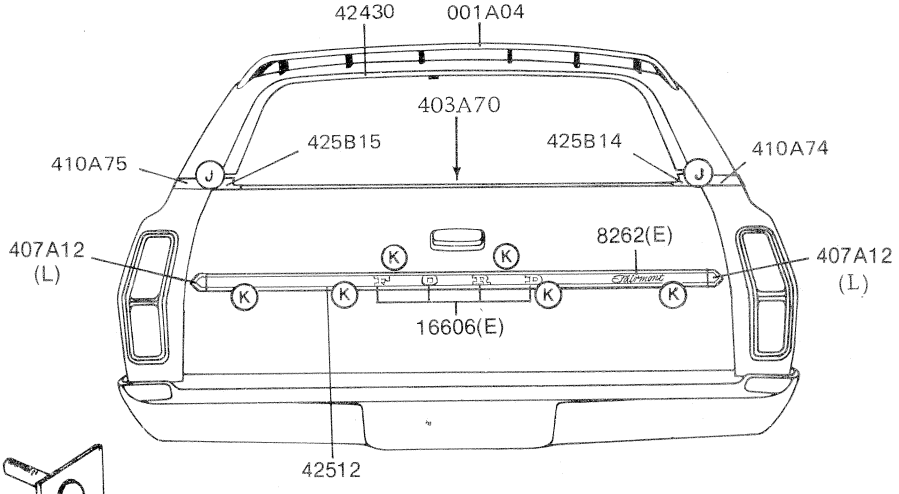

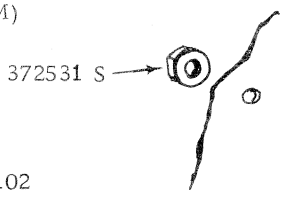

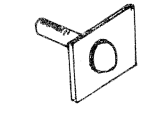

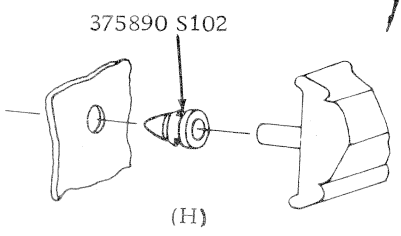

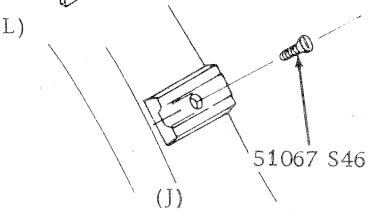

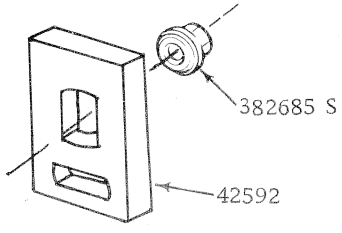

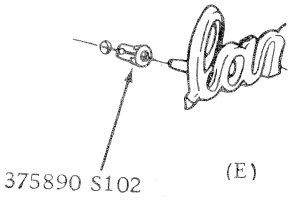

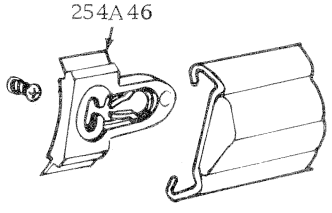

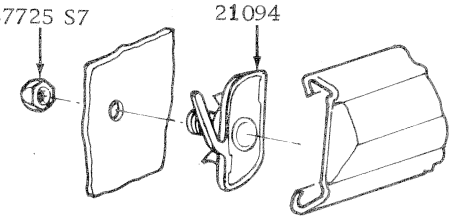

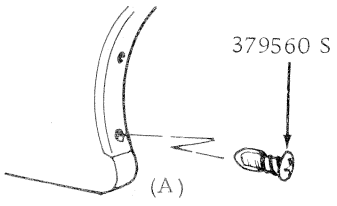

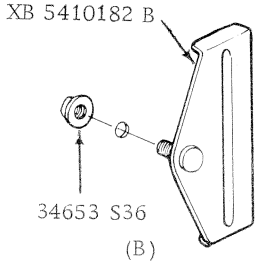

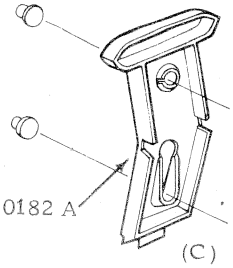

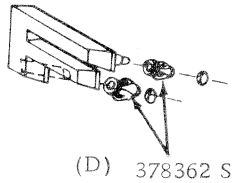

EXTERIOR ORNAMENTATION – XB FAIRMONT (71D)

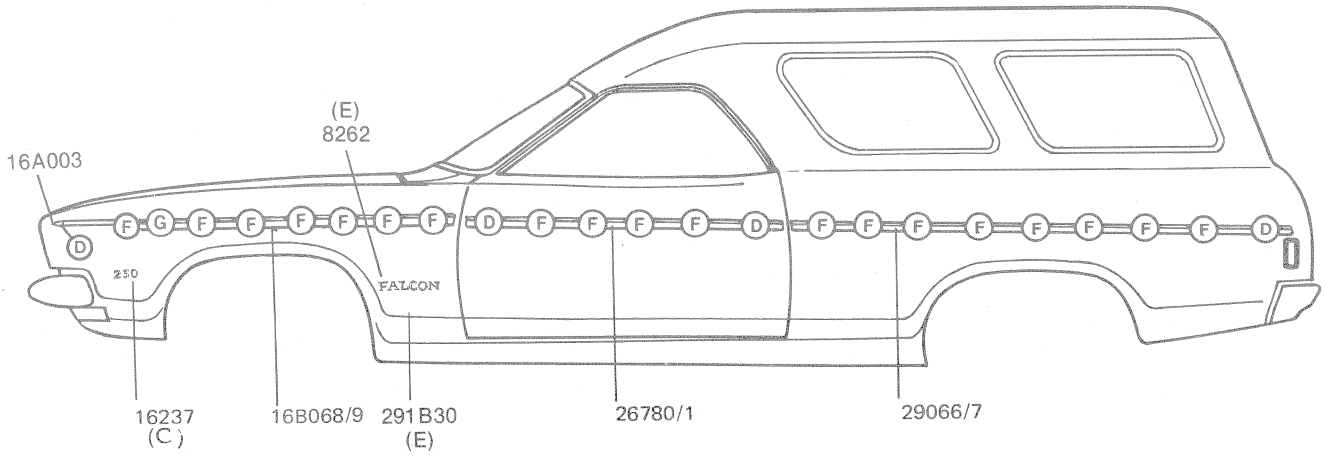

FOR BODYSIDE STRIPE
REFER BODY TYPE 66B ILLUSTRATION

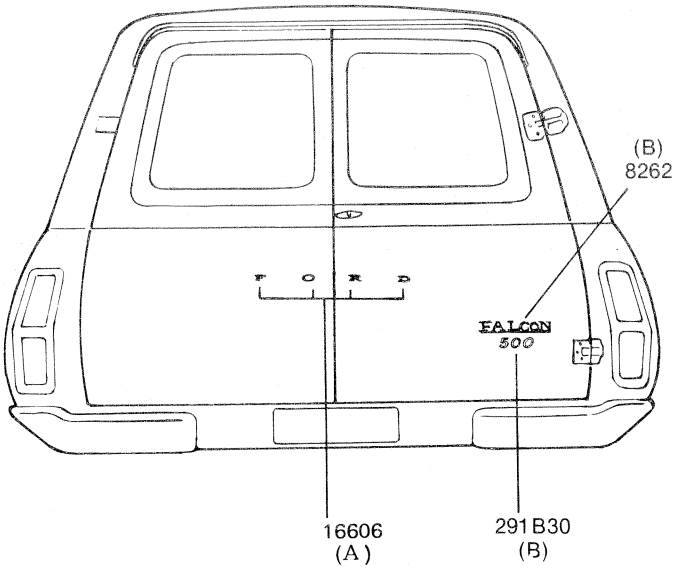

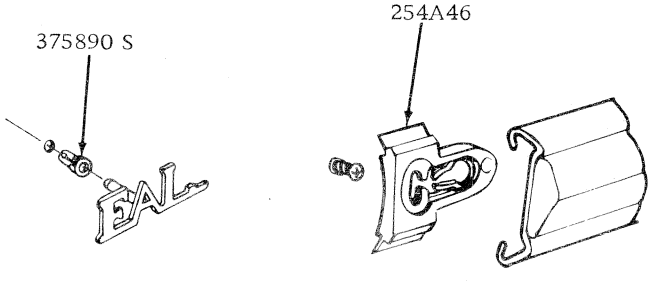

(E) (F)

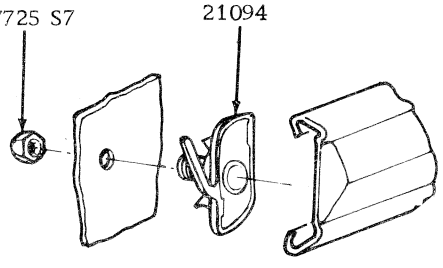

(G)

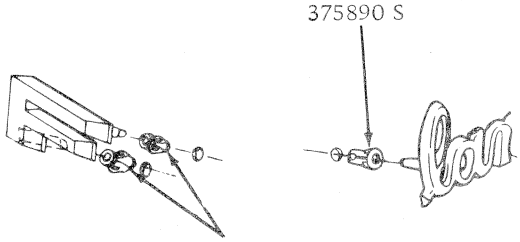

(A) (B) (C) (D)

EXTERIOR ORNAMENTATION – XB FALCON 500 (78B)

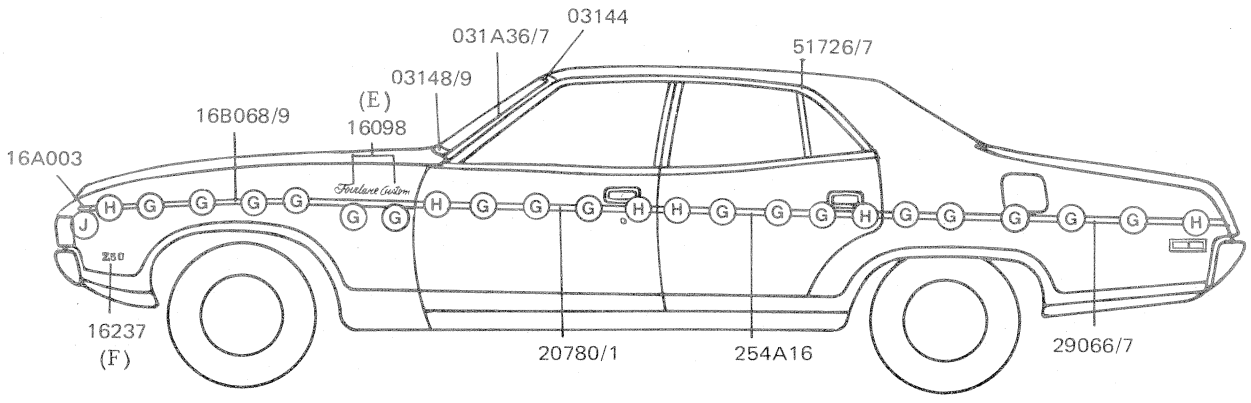

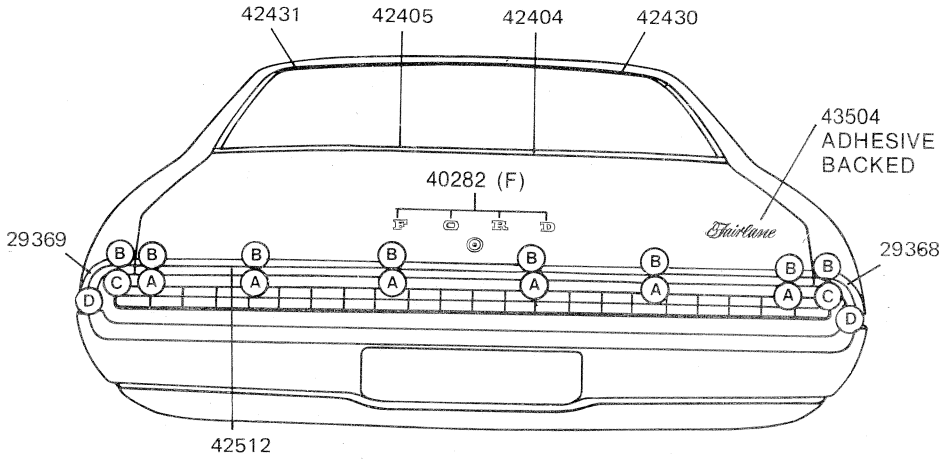

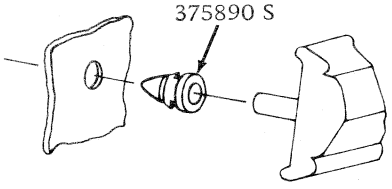

(J)

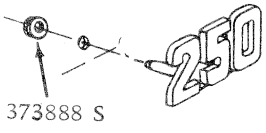

(F)

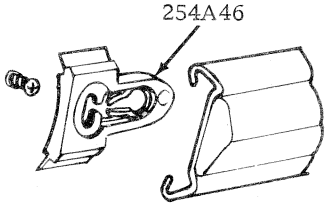

(G)

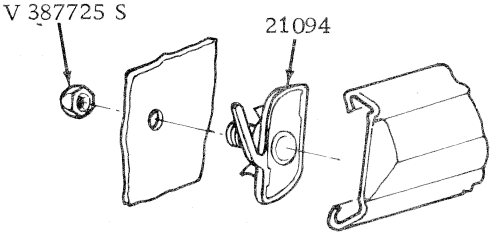

(H)

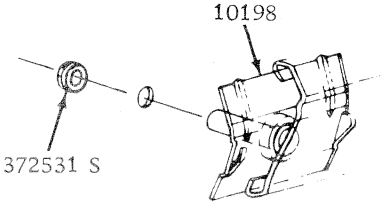

(AB)

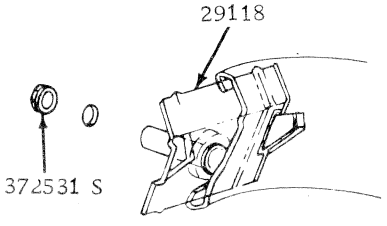

(BC)

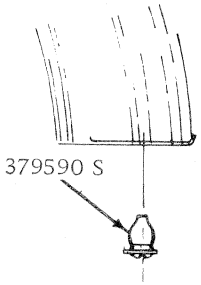

(D)

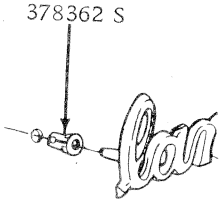

(E)

EXTERIOR ORNAMENTATION – ZG FAIRLANE CUSTOM (54E)

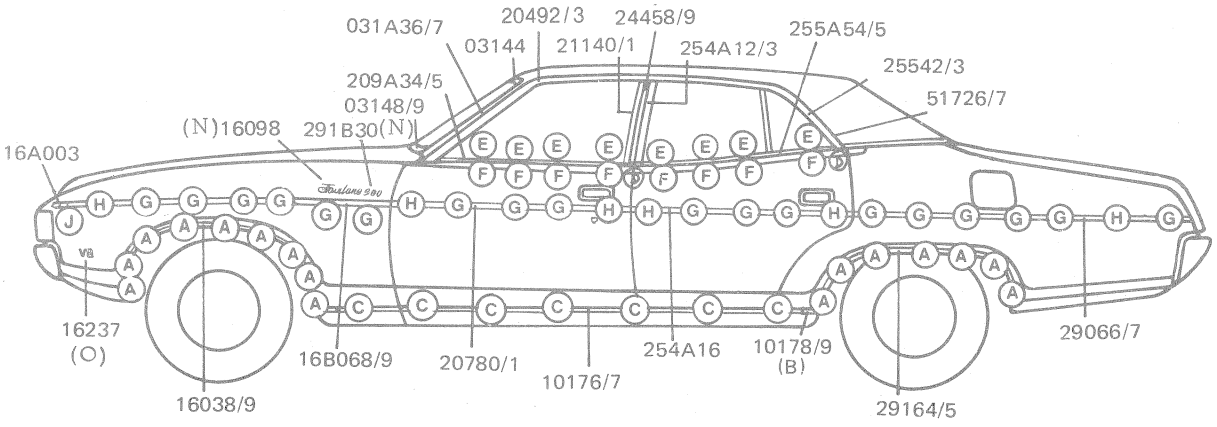

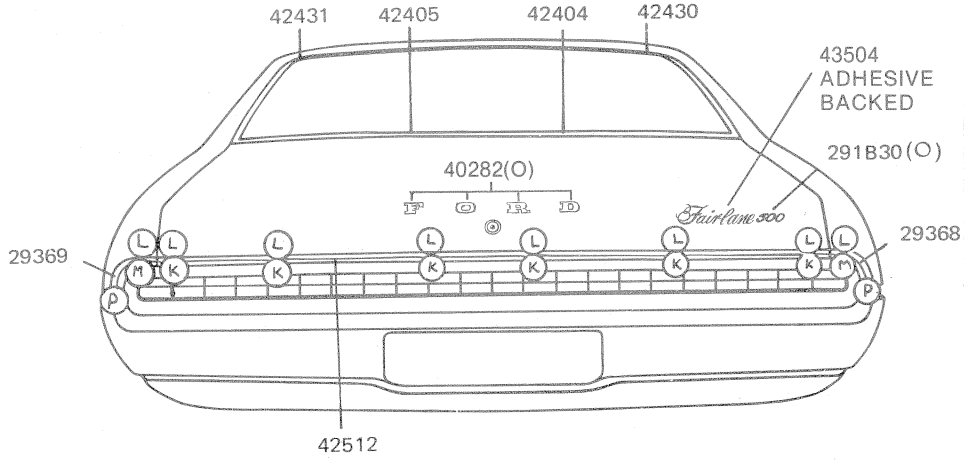

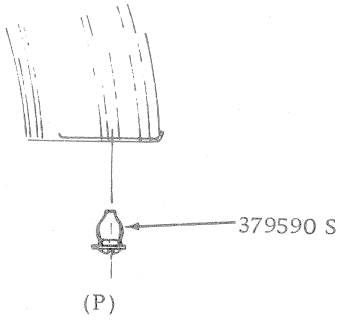

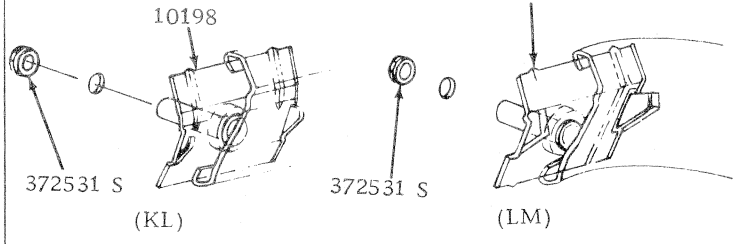

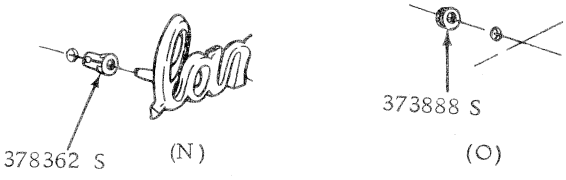

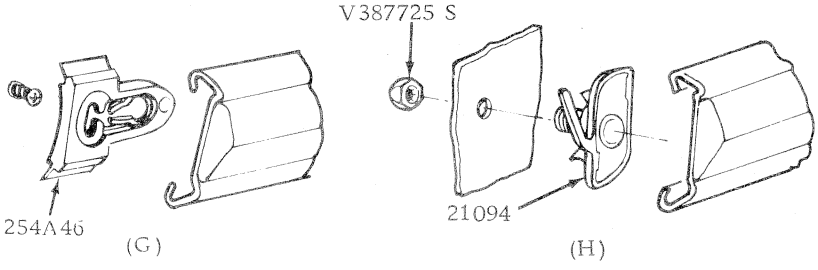

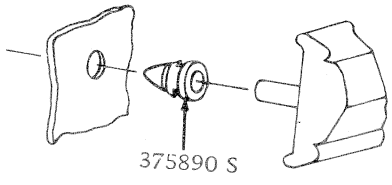

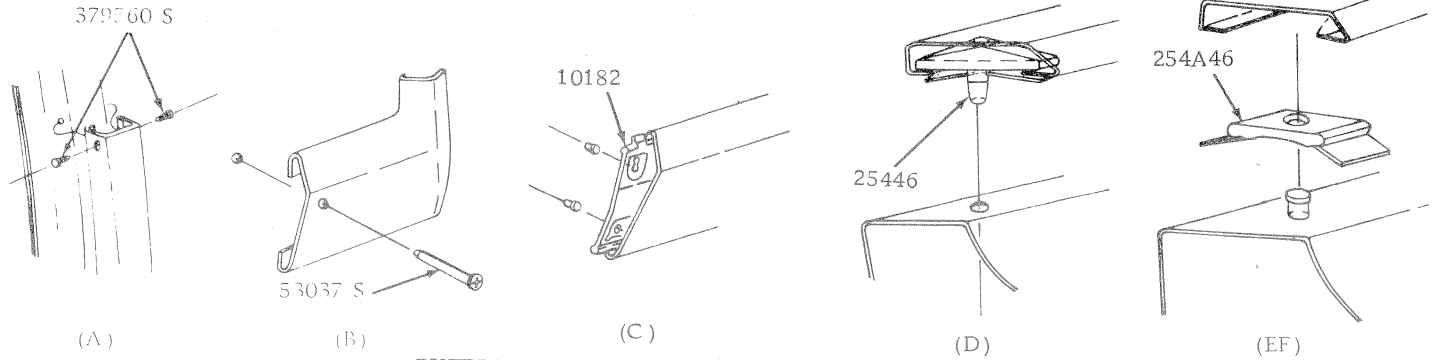

EXTERIOR ORNAMENTATION – ZG FAIRLANE 500 (54G)

Ford

Service Parts

FALCON XA/XB

FAIRLANE ZF/ZG

PARTS CATALOGUE

CAT.128C